Billing Boats®

MARIE - JEANNE

		Billing Boats Denmark Aps
Scale: 1:50	**MARIE JEANNE „580„** *Plan 2*	Drawning no. 50-50038

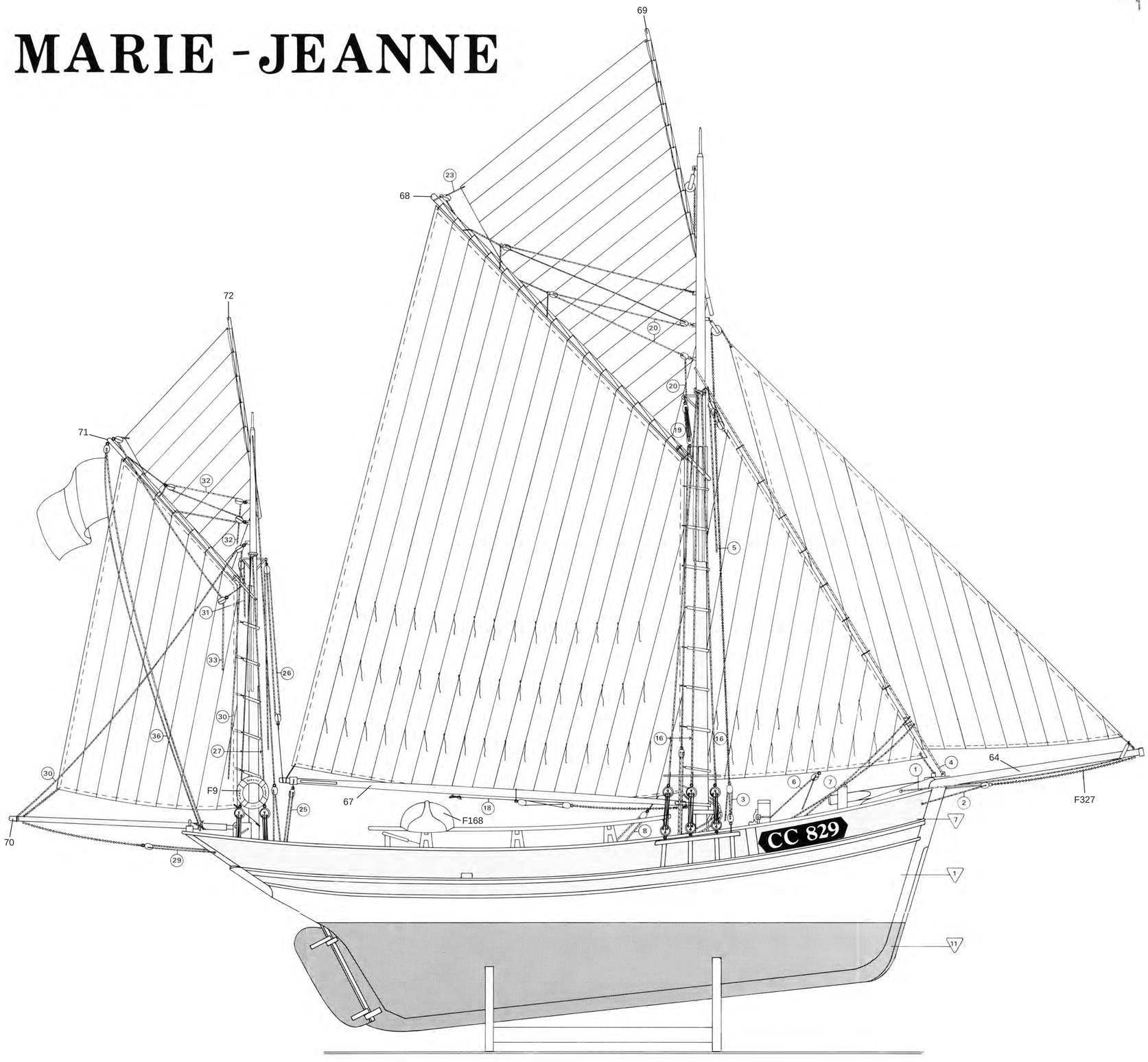

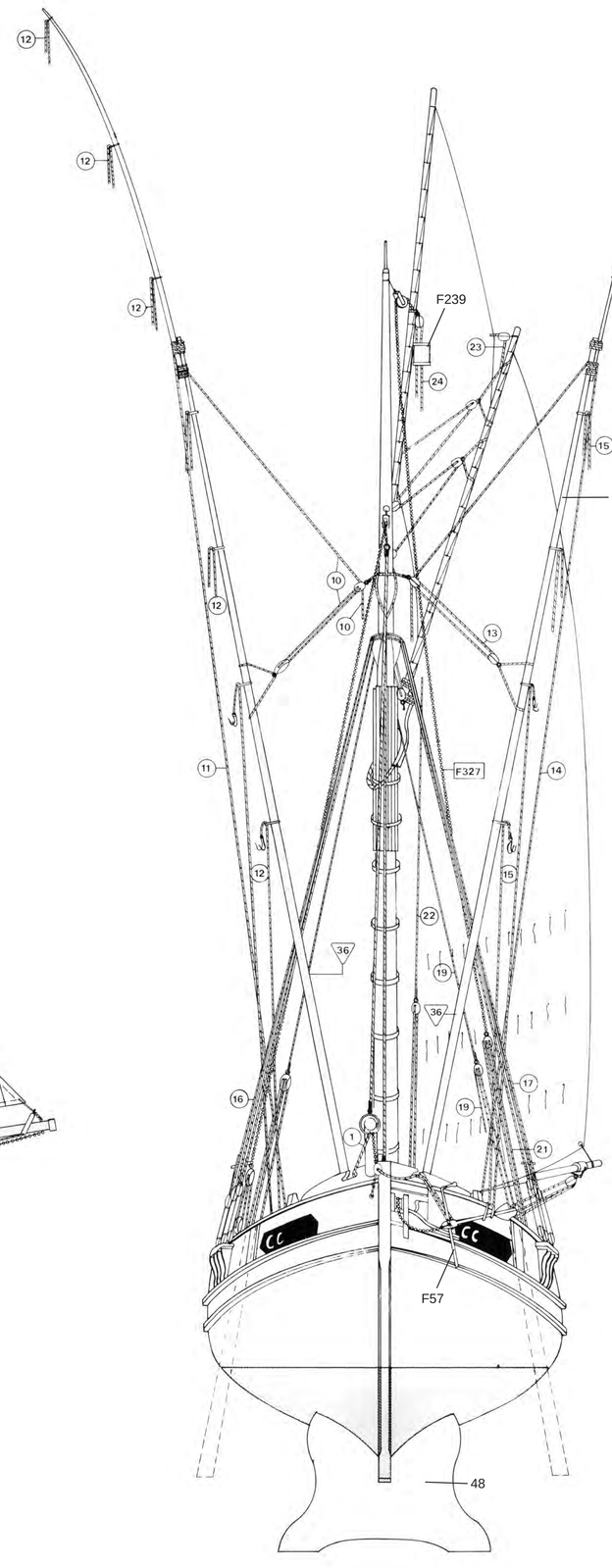

Billing Boats®

		Billing Boats Denmark Aps.
Scale: 1:50	**MARIE JEANNE „580„** *Plan 1*	Drawning no. 50-50038

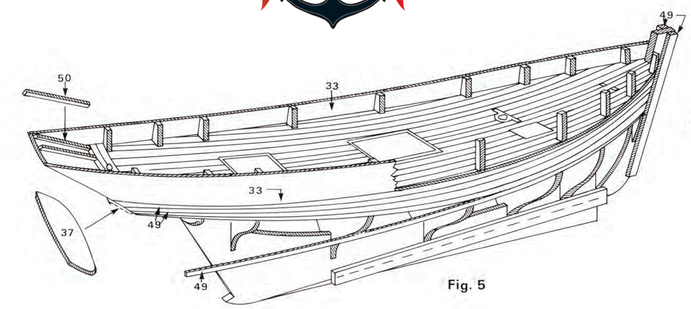

Fig. 5

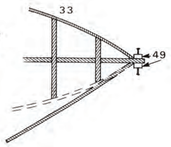

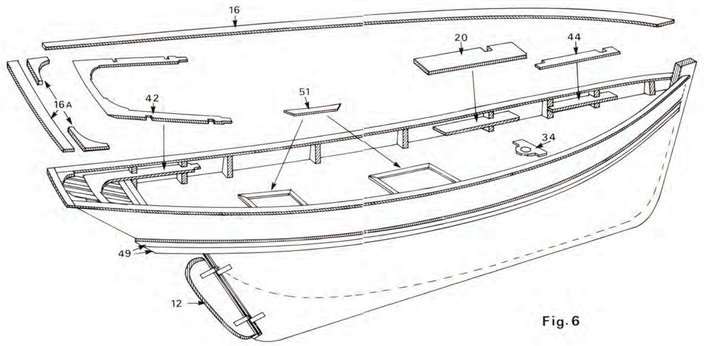

Fig. 6

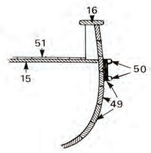

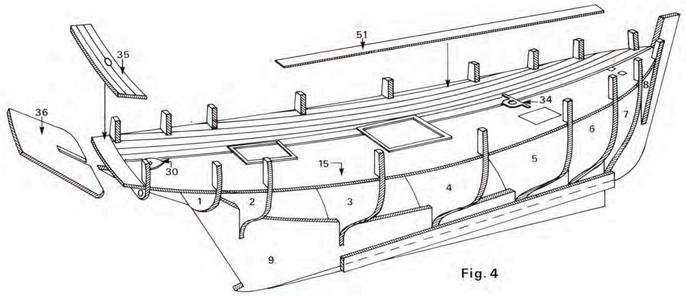

Fig. 4

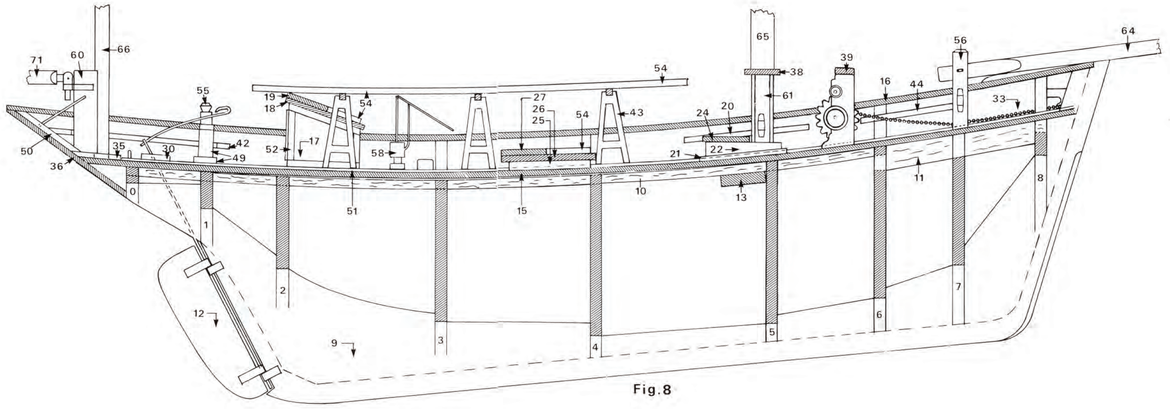

Fig. 8

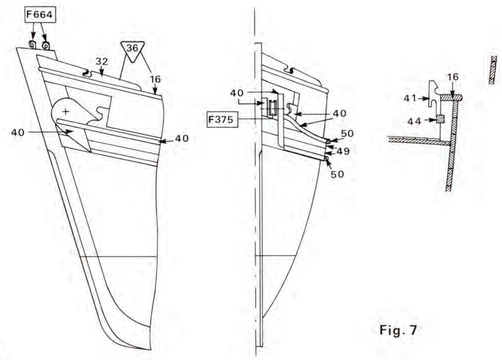

Fig. 7

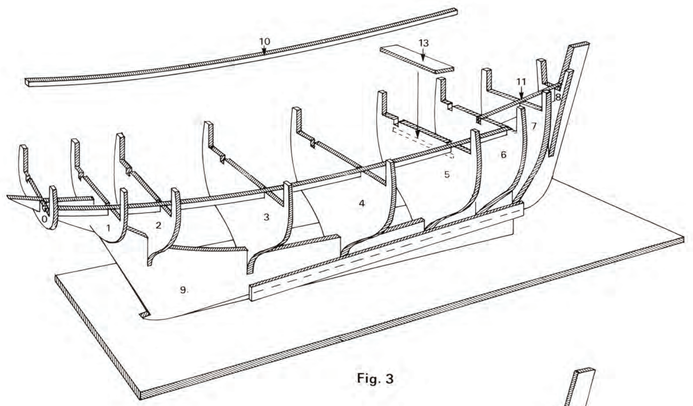

Fig. 3

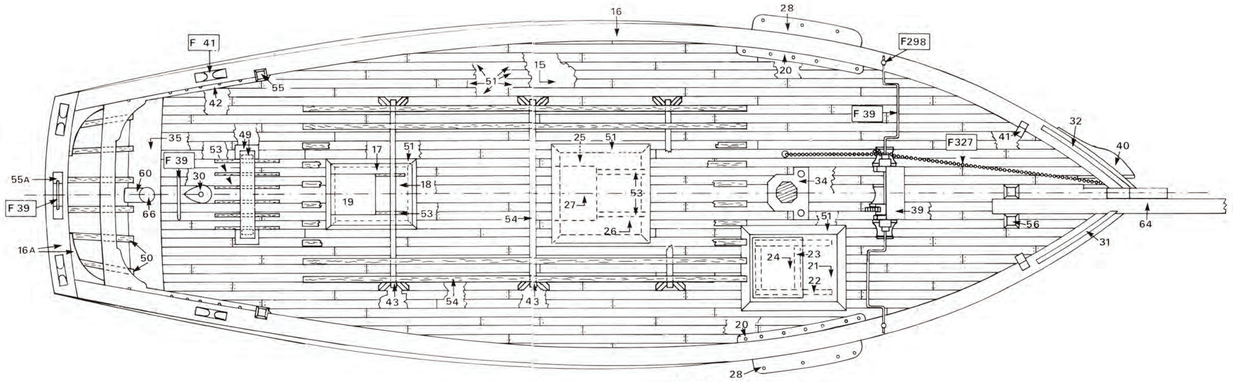

Fig. 9

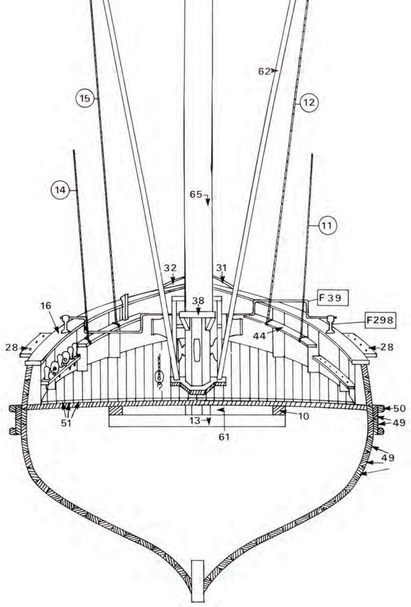

Fig. 11

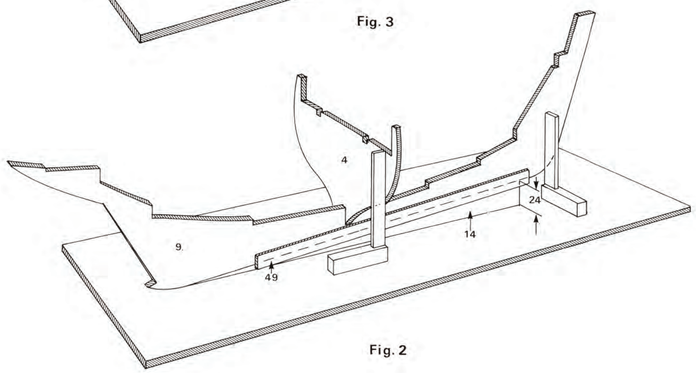

Fig. 2

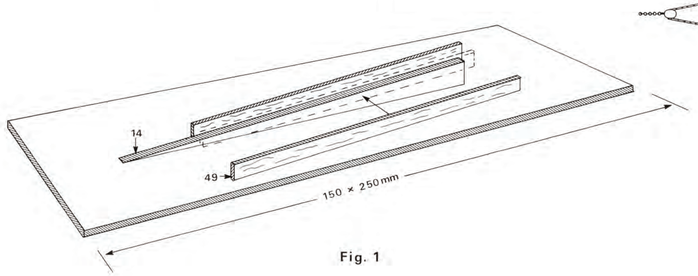

Fig. 1

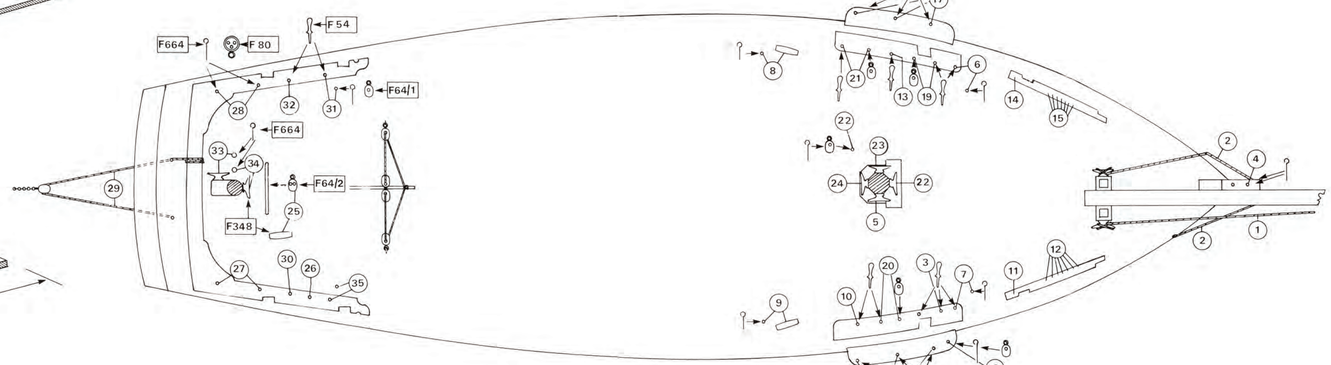

Fig. 10