KAGAMA

FRONT ANTI-ROLL BAR

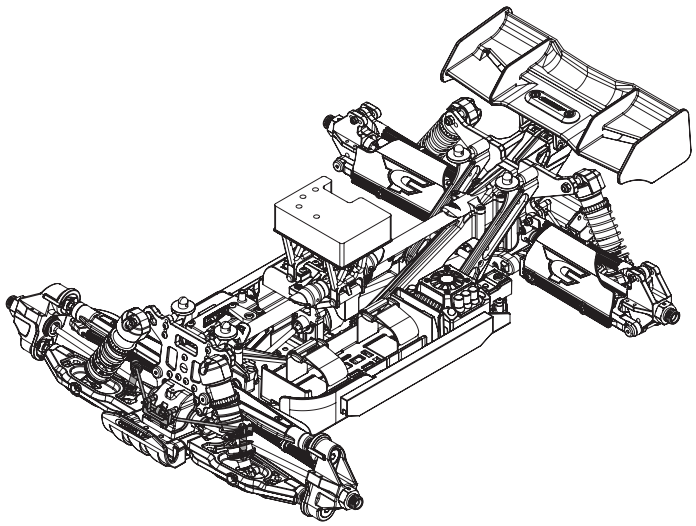

Required Tools:

- 1.5 Hex Driver
- 2.0 Hex Driver
- Shock Pliers
- Pliers
- Thread-locker

STEP 1

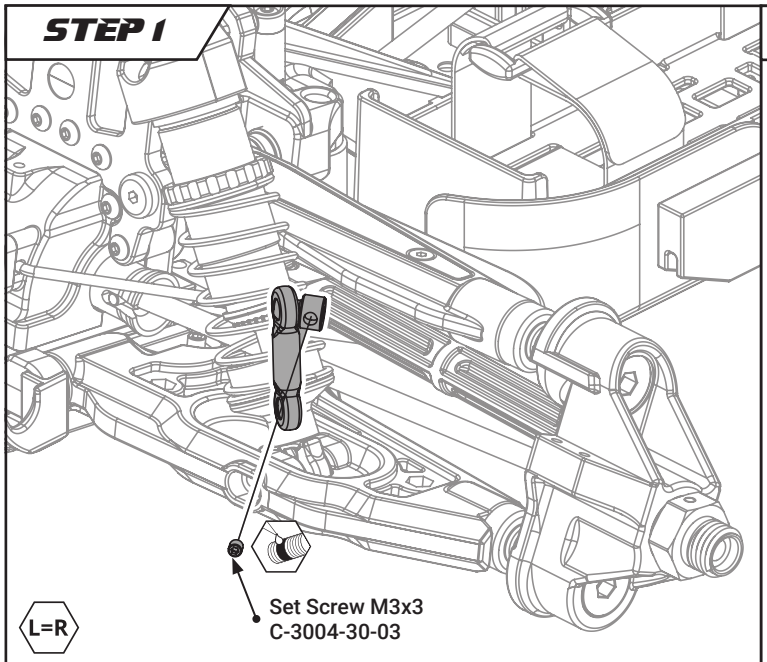

STEP 2

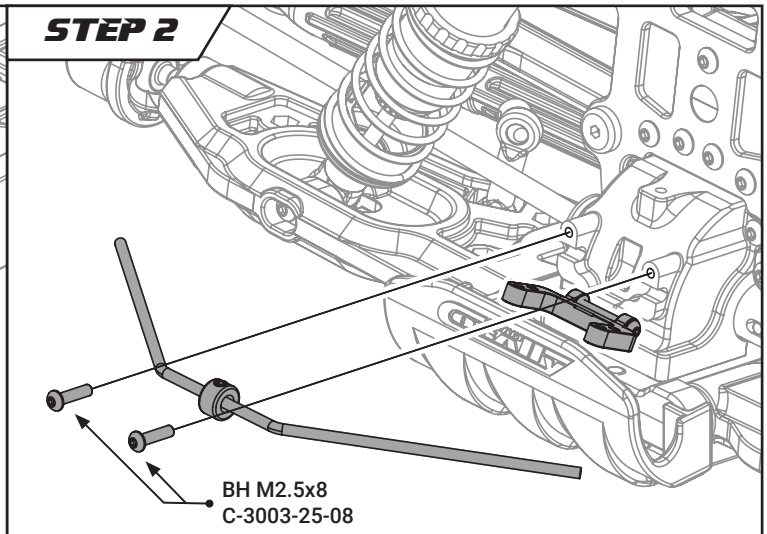

STEP 3

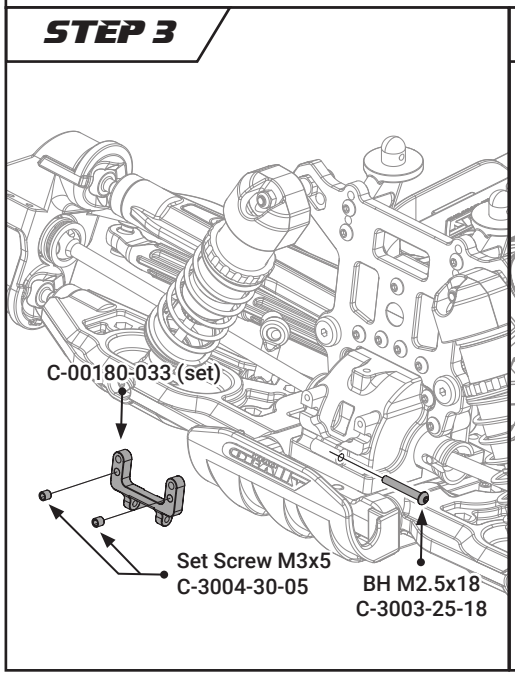

STEP 4

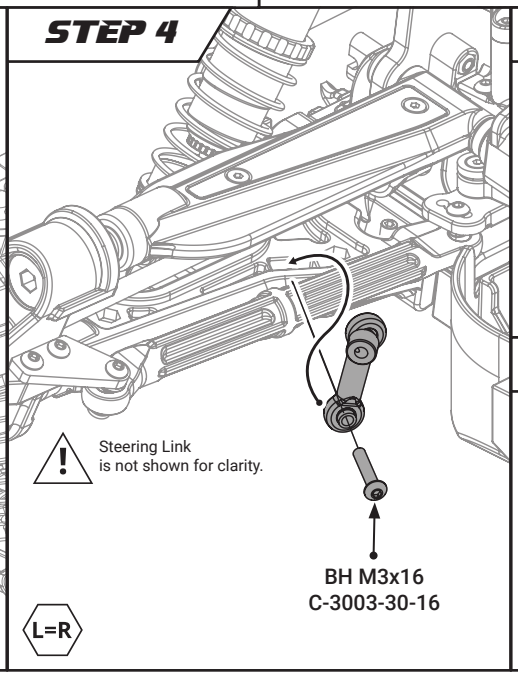

STEP 5

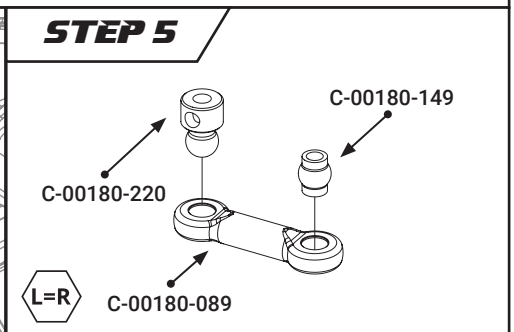
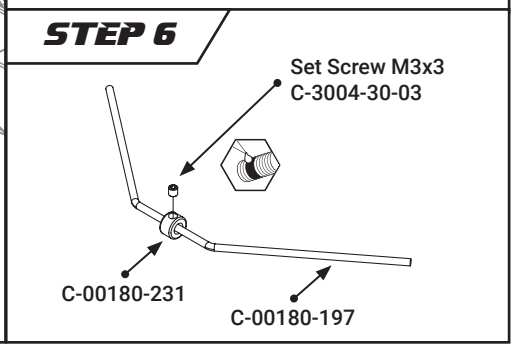
STEP 6