Billing Boats®

5003 Jylland

Mastplan

FIG.11

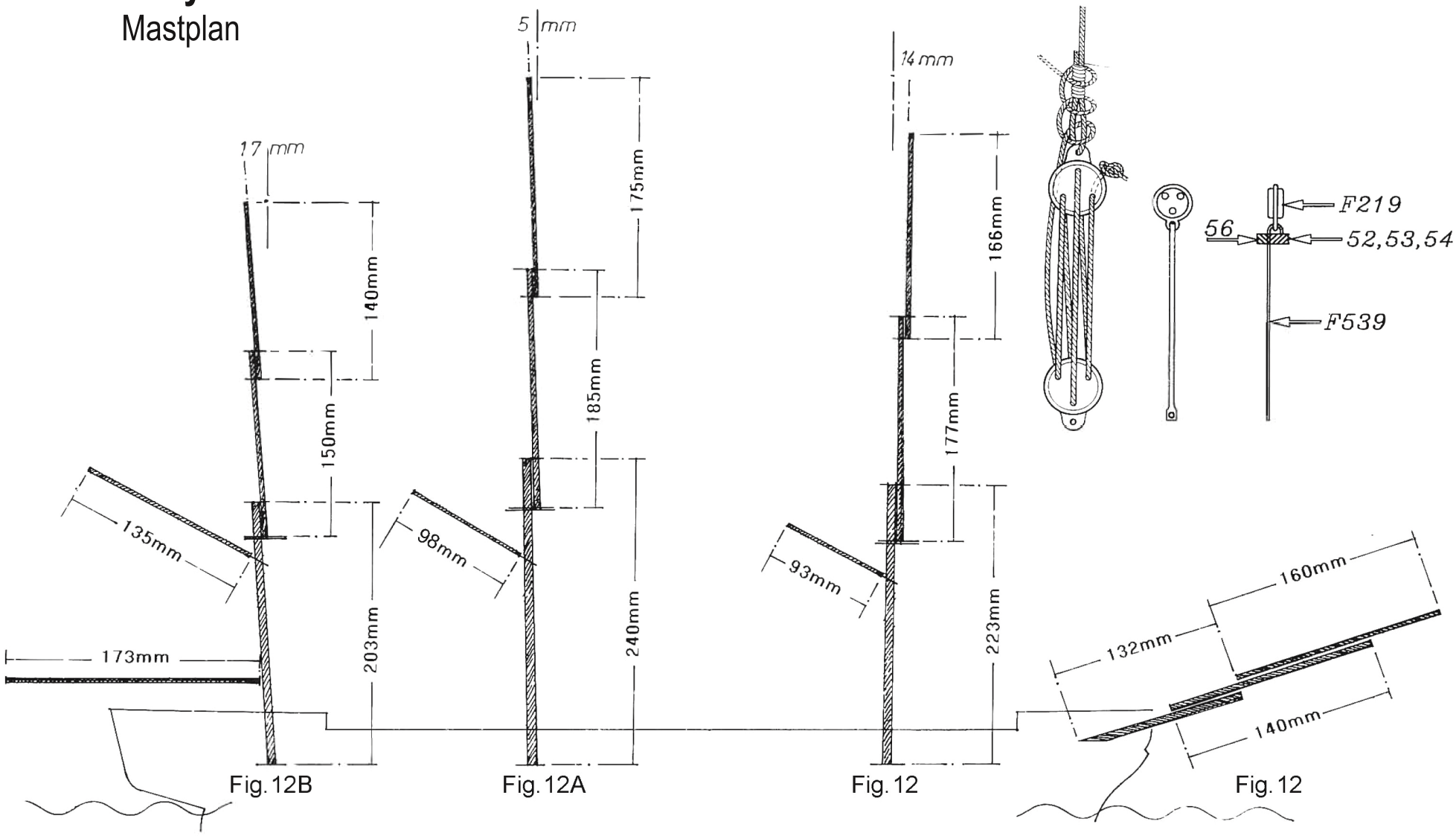

Fig.12B Fig.12A Fig.12 Fig.12

FIG.12A

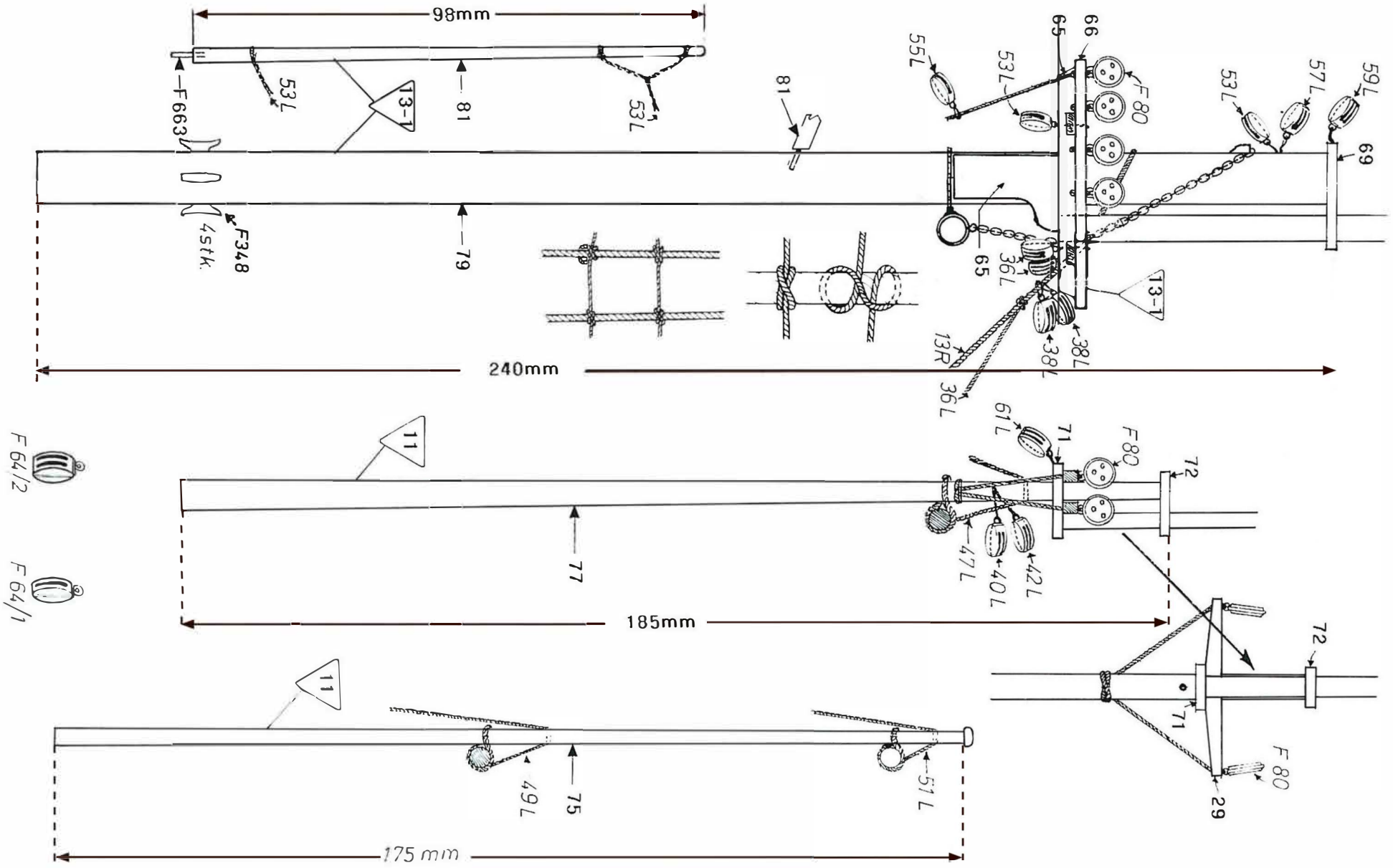
98mm
F663
53L
13-1
81
79
F348
4stk.
240mm
65
66
55L
53L
F80
57L
59L
69
36L
38L
13R
11
77
185mm
61L
71
72
47L
42L
40L
F64/2
F64/1
49L
75
51L
175 mm
29

FIG.12

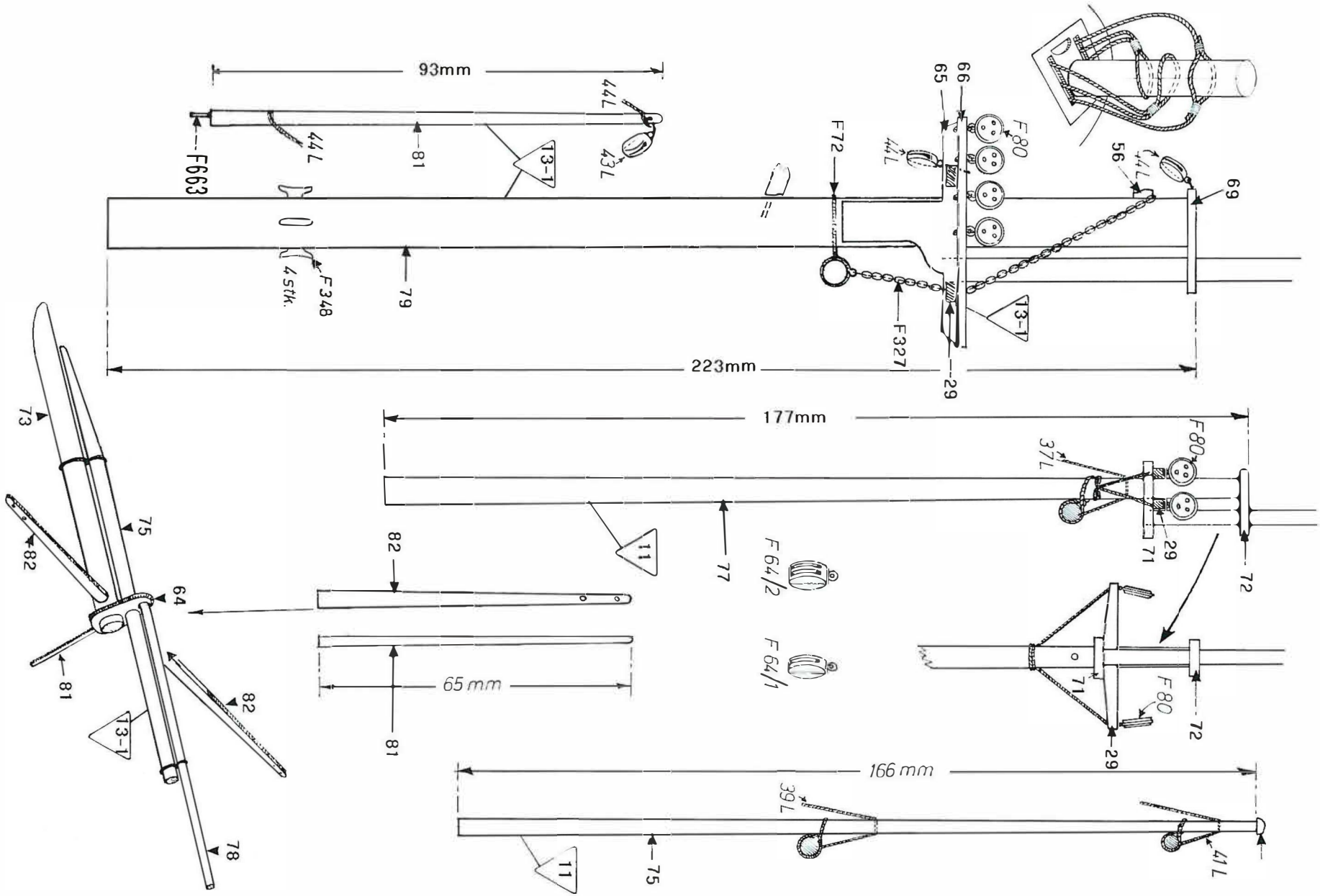
93mm
223mm
177mm
65 mm
166 mm
F663
F348
4 stk.
F72
F327
F80
F 64/2
F 64/1
44L
43L
37L
39L
41L
13-1
11
29
56
64
65
66
69
71
72
73
75
77
78
79
81
82

FIG.12B

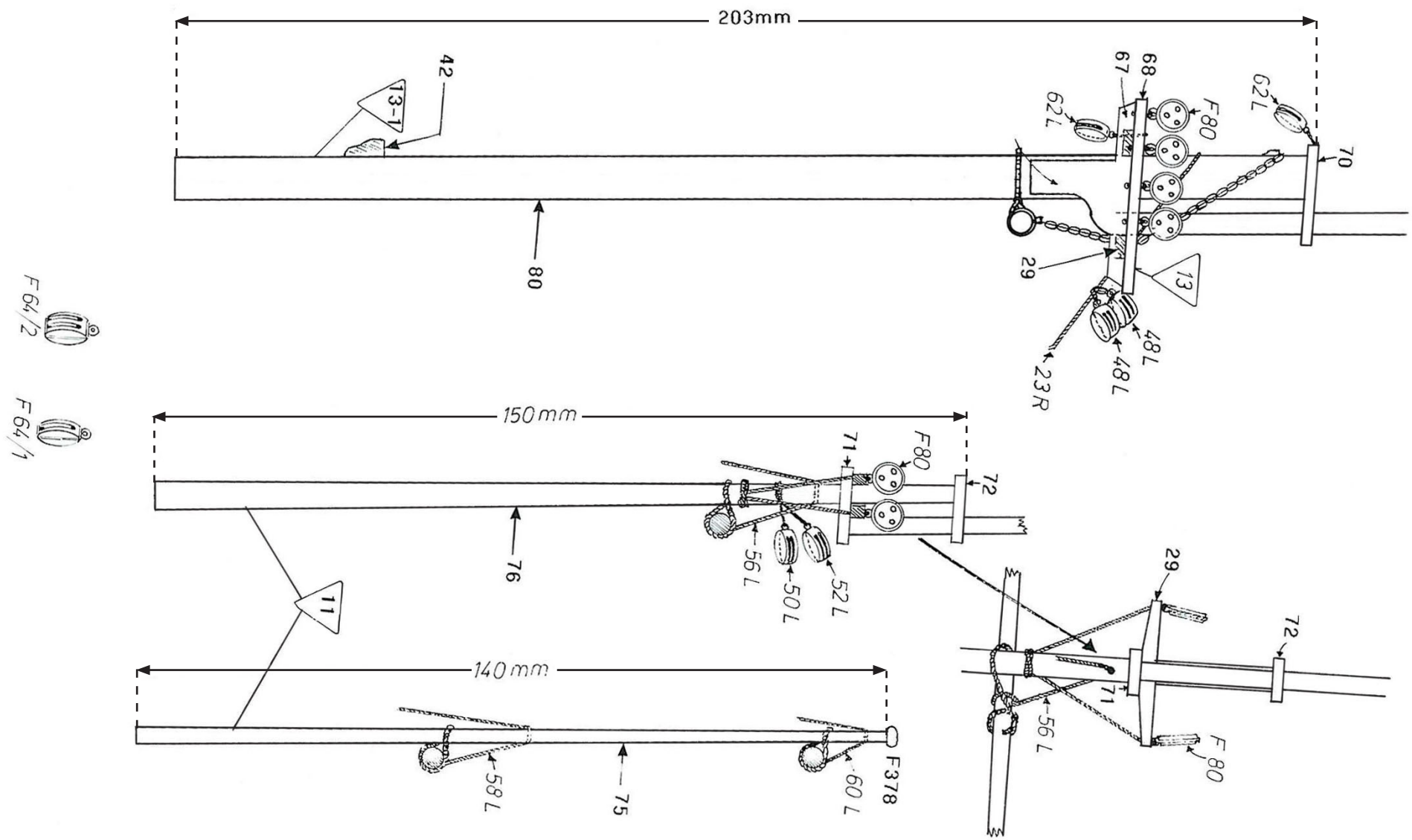
203mm
42
13-1
80
67
68
62L
F80
62L
70
29
13
48L
48L
23R
150mm
71
F80
72
76
56L
50L
52L
11
140mm
58L
75
60L
F378
29
72
71
56L
F80
F64/2
F64/1

FIG.13

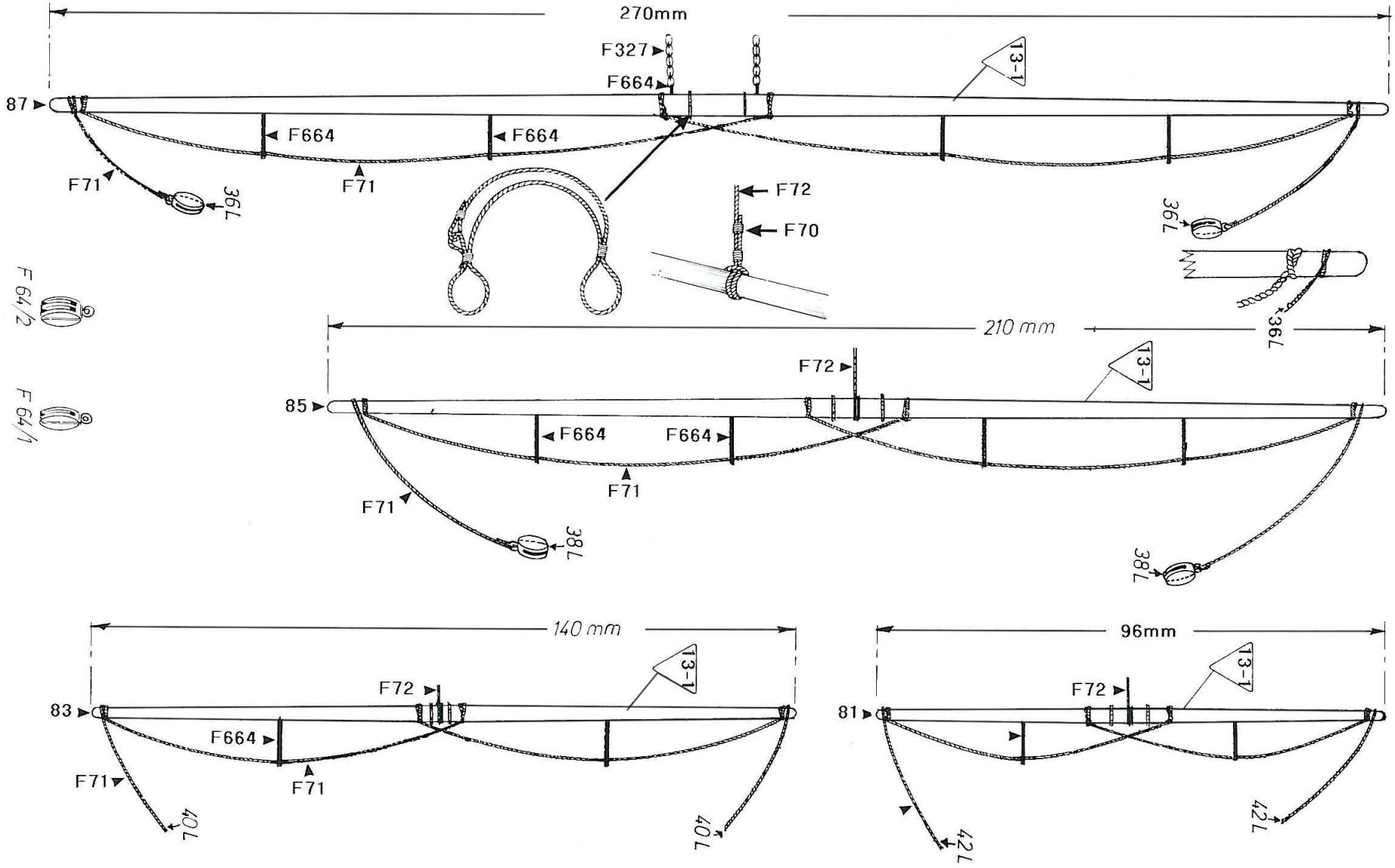
270mm
F327
F664
13-1
87
F664
F664
F71
F71
36L
F72
F70
36R
F64/2
F64/1
210 mm
36R
F72
13-1
85
F664
F664
F71
F71
38L
38R
140 mm
13-1
F72
83
F664
F71
F71
40L
40R
96mm
13-1
F72
81
42L
42R

FIG.13A

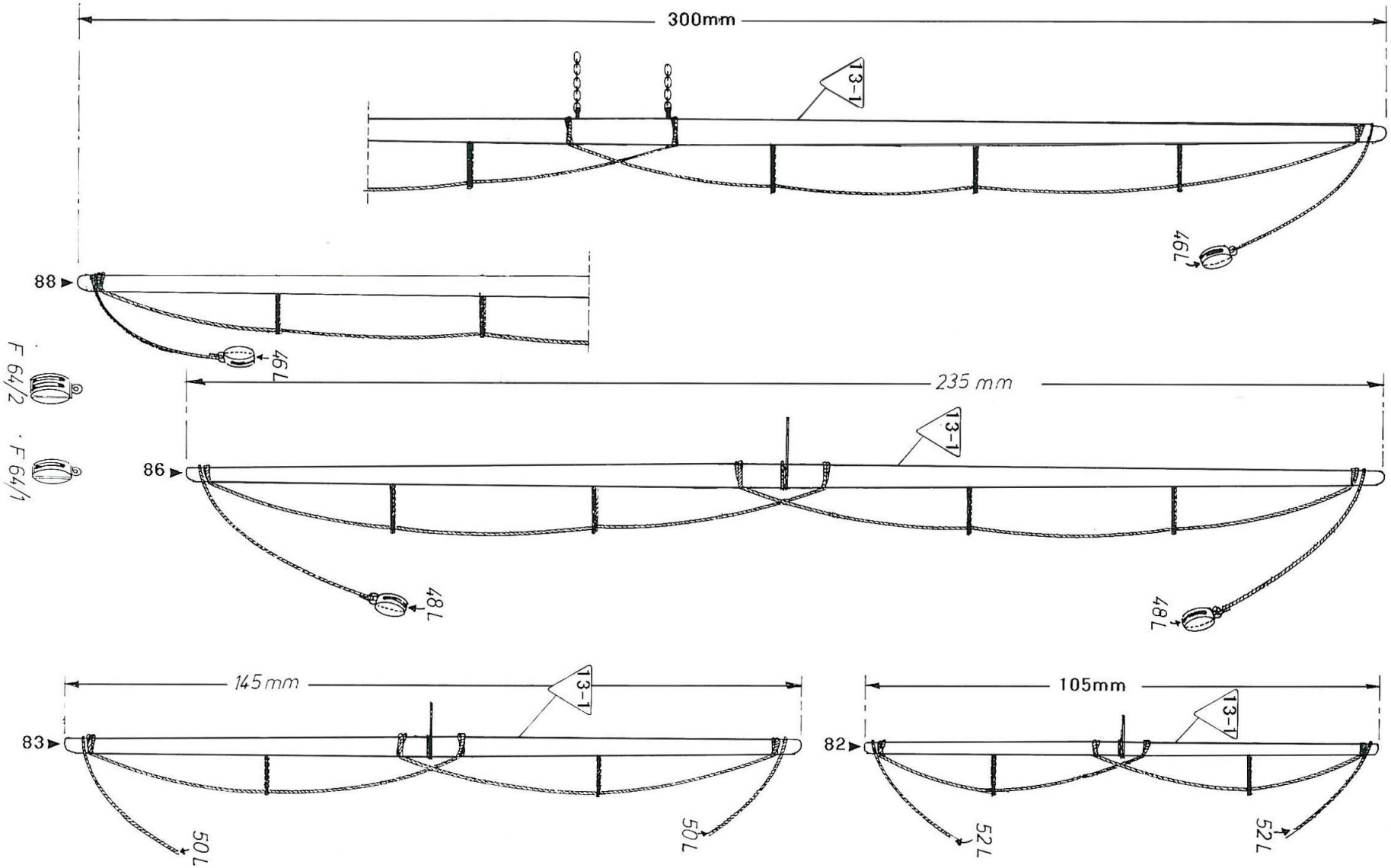
300mm
13-1
46L
88
46L
F 64/2
F 64/1
235 mm
13-1
86
48L
48L
145mm
13-1
83
50L
50L
105mm
13-1
82
52L
52L

FIG.13B

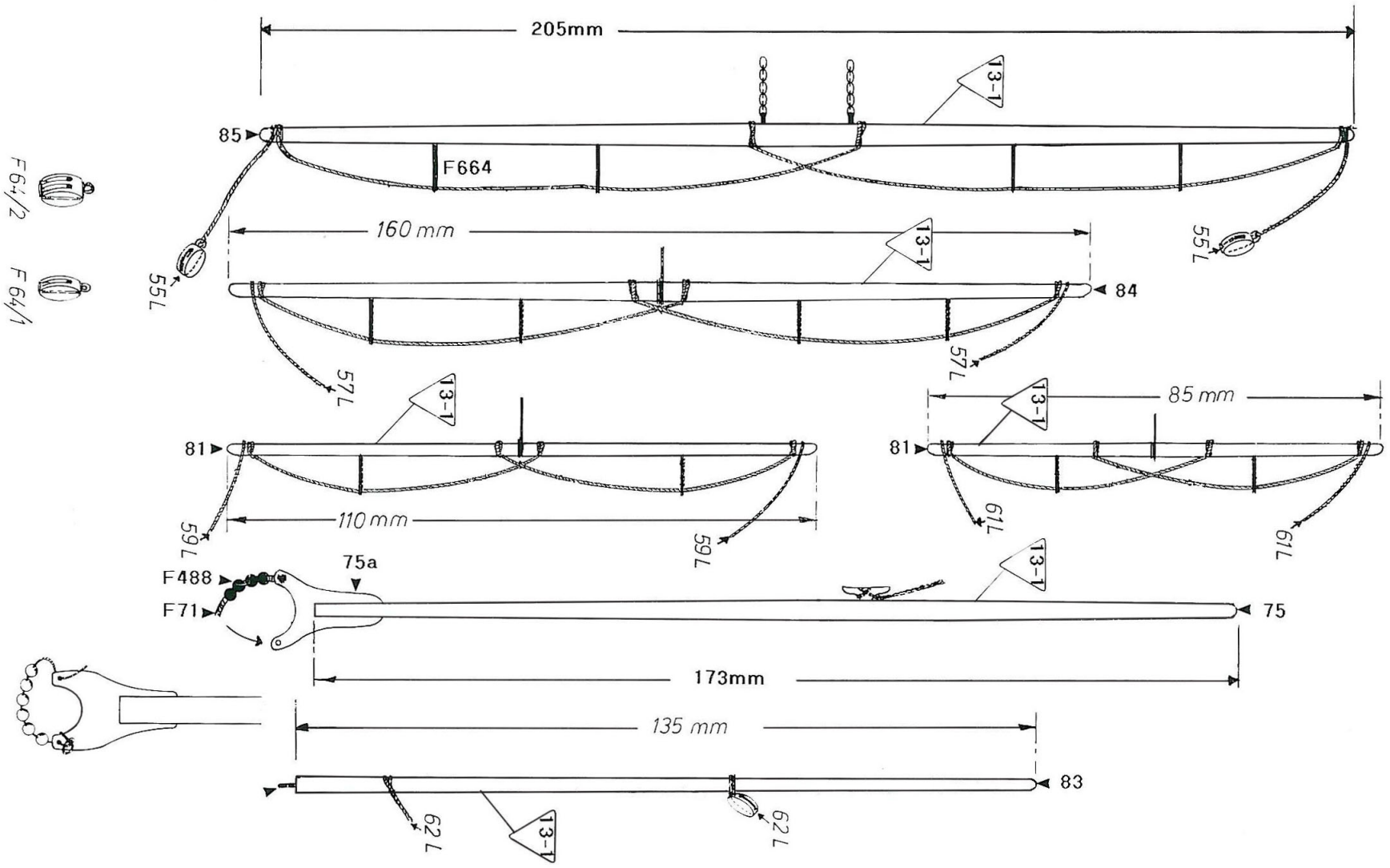
205mm
13-1
85
F664
160 mm
84
55L
57L
81
110 mm
59L
85 mm
61L
F488
F71
75a
75
173mm
135 mm
83
62L
F64/2
F64/1