ELBJØRN ”536” **

Icebreaker

BUILDING INSTRUCTION



This model is Copyright protected
All Copyrights to the designs of this version of the Elbjørn belongs to Billing Boats Denmark Aps

www.billingboats.com

50-51078 080125

DK

I perioden 1954 - 1996 var M/S Elbjørn en aktiv del af den danske isbryder service. Dens karriere som isbryder sluttede brat den 12. februar, 1996, hvor en DC dynamo
eksploderede. Elbjørn kunne sejle i havn ved egen kraft, men det var klart, at dens isbryder dage var forbi.

I dag, er Elbjørn fortøjret på Aalborgs havnefront, hvor skibet opererer som en restaurant og museums skib.

GB

In the period 1954 - 1996 M/S Elbjørn was an active part of the Danish icebreaker service. The career as icebreaker ended abruptly on February 12th, 1996, when a DC dynamo exploded. Elbjørn could proceed to port under its own power, but it was clear that its icebreaker days were over.

Today, Elbjørn is at Aalborg's waterfront, where the ship operates as a restaurant and museum ship.

D

Im Zeitraum 1954 - 1996 war M/S Elbjørn ein aktiver Teil der Dänischen Eisbrecher-Service. Die Karriere als Eisbrecher endete abrupt am 12. Februar 1996, als eine DC-Dynamo explodierte. Elbjørn konnte mit eigener Kraft, in den Hafen fahren, aber es war klar, dass seine Eisbrecher Tage vorbei waren.

Heute ist Elbjørn ein Restaurant und Museumsschiff im Hafen bei Aalborg.

Table contents for “Elbjørn” Art. No. 536							
Pcs.	No.	Dimension	Material	DK	GB	D	F
1	1	4mm x-veneér	3333L	Køl	Keel	Kiel	Quille
1	2	4mm x-veneér	3334L	Køl	Keel	Kiel	Quille
1	3	4mm x-veneér	3334L	Køl	Keel	Kiel	Quille
1	4	4mm x-veneér	3334L	Spant	Frame	Spant	Couple
1	5	4mm x-veneér	3333L	Spant	Frame	Spant	Couple
1	6	4mm x-veneér	3333L	Spant	Frame	Spant	Couple
1	7	4mm x-veneér	3334L	Spant	Frame	Spant	Couple
1	8	4mm x-veneér	3333L	Spant	Frame	Spant	Couple
1	9	4mm x-veneér	3333L	Spant	Frame	Spant	Couple
1	10	4mm x-veneér	3333L	Spant	Frame	Spant	Couple
1	11	4mm x-veneér	3333L	Spant	Frame	Spant	Couple
1	12	4mm x-veneér	3334L	Spant	Frame	Spant	Couple
1	13	4mm x-veneér	3334L	Spant	Frame	Spant	Couple
1	14	4mm x-veneér	3333L	Spant	Frame	Spant	Couple
1	15	4mm x-veneér	3333L	Spant	Frame	Spant	Couple
1	16	4mm x-veneér	3334L	Spant	Frame	Spant	Couple
1	17	4mm x-veneér	3333L	Spant	Frame	Spant	Couple
2	18	4mm x-veneér	3333L	Forstærkning	Strenghtening	Verstärkung	Renfort
2	19	3mm x-veneér	3335L	Hjælpestykke	Auxiliary piece	Hilfsstücke	Pièce annexes
1	20	5mm x-veneér	3332L	Konsol, servo	Console, servo	Konsolel, servo	Consolel, servo
2	21	3mm x-veneér	3335L	Hjælpestykke	Auxiliary piece	Hilfsstücke	Pièce annexes
1	22	2mm x-veneér	3337L	Dæk	Deck	Deck	Pont
1	23	2mm x-veneér	3337L	Skot	Bulhead	Schott	Cloison
1	24	2mm x-veneér	3336L	Dæk	Deck	Deck	Pont
1	25	2mm x-veneér	3337L	Luge	Hatch	Luken	Ecoutilles
1	26	2mm x-veneér	3337L	Luge	Hatch	Luken	Ecoutilles
2	27	4mm x-veneér	3333L	Hjælpestykke	Auxiliary piece	Hilfsstücke	Pièce annexes
2	28	4mm x-veneér	3334L	Hjælpestykke	Auxiliary piece	Hilfsstücke	Pièce annexes
1	29	4mm x-veneér	3333L	Ror	Rudder	Ruder	Gouvernail
1	30	2mm x-veneér	3336L	Styrhus	Cabin	Steuerhaus	Cabine
2	31	2mm x-veneér	3336L	Styrhus	Cabin	Steuerhaus	Cabine
2	32	2mm x-veneér	3337L	Styrhus	Cabin	Steuerhaus	Cabine
2	33	2mm x-veneér	3336L	Styrhus	Cabin	Steuerhaus	Cabine
1	34	2mm x-veneér	3336L	Styrhus	Cabin	Steuerhaus	Cabine

1	35	2mm x-veneér	3337L	Styrhus	Cabin	Steuerhaus	Cabine
1	36	1mm x-veneér	3338L	Styrhus	Cabin	Steuerhaus	Cabine
2	37	1mm x-veneér	3338L	Styrhus	Cabin	Steuerhaus	Cabine
2	38	1mm x-veneér	3338L	Styrhus	Cabin	Steuerhaus	Cabine
2	39	1mm x-veneér	3338L	Styrhus	Cabin	Steuerhaus	Cabine
1	40	1mm x-veneér	3338L	Styrhus	Cabin	Steuerhaus	Cabine
2	41	2mm x-veneér	3336L	Maskinhus	Engine house	Maschinenhaus	Maison de moteur
1	42	2mm x-veneér	3336L	Maskinhus	Engine house	Maschinenhaus	Maison de moteur
1	43	2mm x-veneér	3336L	Maskinhus	Engine house	Maschinenhaus	Maison de moteur
1	44	2mm x-veneér	3336L	Maskinhus	Engine house	Maschinenhaus	Maison de moteur
1	45	2mm x-veneér	3337L	Maskinhus	Engine house	Maschinenhaus	Maison de moteur
4	46	5mm x-veneér	3332L	Maskinhus	Engine house	Maschinenhaus	Maison de moteur
1	47	2mm x-veneér	3337L	Maskinhus	Engine house	Maschinenhaus	Maison de moteur
4	48	1mm x-veneér	3338L	Maskinhus	Engine house	Maschinenhaus	Maison de moteur
8	49	1mm x-veneér	3338L	Dør	Door	Türen	Portes
6	50	4mm x-veneér	3334L	Skylight	Skylight	Oberlicht	Claire voie
2	51	1mm x-veneér	3338L	Skylight	Skylight	Oberlicht	Claire voie
2	52	1mm x-veneér	3338L	Beklædningsliste	Plankingstrips	Beplankung	Baguettes de bordé
2	53	1mm x-veneér	3338L	Beklædningsliste	Plankingstrips	Beplankung	Baguettes de bordé
2	54	1mm x-veneér	3338L	Beklædningsliste	Plankingstrips	Beplankung	Baguettes de bordé
1	55	1mm x-veneér	3338L	Ræling	Rail	Reling	Gouvernail
1	56	2mm x-veneér	3336L	Køl	Keel	Kiel	Quille
1	57	4mm x-veneér	3333L	Platform	Platform	Plattform	Plateforme
1	58	4mm x-veneér	3333L	Luge	Hatch	Luke	Escoutilles
1	59	5mm x-veneér	3332L	Luge	Hatch	Luke	Escoutilles
1	60	1mm x-veneér	3338L	Luge	Hatch	Luke	Escoutilles
2	61	5mm x-veneér	3332L	Luge	Hatch	Luke	Escoutilles
1	62	1mm x-veneér	3338L	Luge	Hatch	Luke	Escoutilles
2	63	1mm x-veneér	3338L	Styrhus	Cabin	Steuerhaus	Cabine
1	64	1mm x-veneér	3338L	Styrhus	Cabin	Steuerhaus	Cabine
2	65	1mm x-veneér	3338L	Lejder	Ladder	Leiter	Echelle
2	66	1mm x-veneér	3338L	Styrhus	Cabin	Steuerhaus	Cabine
2	67	1mm x-veneér	3338L	Pullert-fundament	Bollard base	Pollerunterlage	Bitte d'amarrage
4	68	1mm x-veneér	3338L	Pullert-fundament	Bollard base	Pollerunterlage	Bitte d'amarrage
2	69	1mm x-veneér	3338L	Pullert-fundament	Bollard base	Pollerunterlage	Bitte d'amarrage
4	70	1mm x-veneér	3338L	Pullert	Bollard	Poller	Bitte d'amarrage

1	71	1mm x-veneér	3338L	Antenne	Antenna	Antenne	Antenne
1	72	2mm x-veneér	3337L	Nedgang	Companion	Niedergang	Couroir
1	73	4mm x-veneér	3334L	Nedgang	Companion	Niedergang	Couroir
8	74	1mm x-veneér	3338L	Bedding	Slip	Helling	Cale de construction
2	75	1mm x-veneér	3338L	Nedgang	Companion	Niedergang	Couroir
2	76	1mm x-veneér	3338L	Nedgang	Companion	Niedergang	Couroir
4	77	5mm x-veneér	3332L	Nedgang	Companion	Niedergang	Couroir
2	78	1mm x-veneér	3338L	Styrhus	Cabin	Steuerhaus	Cabine
2	79	1mm x-veneér	3338L	Styrhus	Cabin	Steuerhaus	Cabine
2	80	1mm x-veneér	3338L	Dør	Door	Türen	Portes
2	81	1mm x-veneér	3338L	Lejder	Ladder	Leiter	Echelle
1	82	3mm x-veneér	3335L	Hjælpestykke	Auxiliary piece	Hilfsstücke	Pièce annexes
2	83	2mm x-veneér	3336L	Ankerbrønd	Anchor locker	Ankerkasten	Baille à mouillage
2	84	2mm x-veneér	3336L	Ankerbrønd	Anchor locker	Ankerkasten	Baille à mouillage
2	85	2mm x-veneér	3336L	Ankerbrønd	Anchor locker	Ankerkasten	Baille à mouillage
2	86	2mm x-veneér	3336L	Ankerbrønd	Anchor locker	Ankerkasten	Baille à mouillage
4	87	1mm x-veneér	3338L	Trappe	Stairs	Treppe	Escalier
28	88	1mm x-veneér	3338L	Trappe	Stairs	Treppe	Escalier
1	89	1mm x-veneér	3338L	Radar	Radar	Radar	Radar
2	90	1mm x-veneér	3338L	Radar	Radar	Radar	Radar
2	91	4mm x-veneér	3334L	Radar	Radar	Radar	Radar
2	92	3mm x-veneér	3335L	Radar	Radar	Radar	Radar
1	93	1mm x-veneér	3338L	Radar	Radar	Radar	Radar
2	94	2mm x-veneér	3337L	Ventil	Vent	Lüfter	Manche à áir
2	95	2mm x-veneér	3337L	Ventil	Vent	Lüfter	Manche à áir
1	96	2mm x-veneér	3337L	Ventil	Vent	Lüfter	Manche à áir
1	97	2mm x-veneér	3337L	Ventil	Vent	Lüfter	Manche à áir
3	98	1mm x-veneér	3338L	Ventil	Vent	Lüfter	Manche à áir
1	99	1mm x-veneér	3338L	Skot	Bulhead	Schott	Cloison
4	100	1mm x-veneér	3338L	Trappe	Stairs	Treppe	Escalier
3	101	1mm x-veneér	3338L	Dør	Door	Türen	Portes
2	102	2mm x-veneér	3337L	Forstærkning	Strenghtening	Verstärkung	Renfort
2	103	2mm x-veneér	3337L	Forstærkning	Strenghtening	Verstärkung	Renfort
1	104	2mm x-veneér	3337L	Ankerspil	Anchorwindless	Ankerspill	Guindeau
2	105	1mm x-veneér	3338L	Ankerspil	Anchorwindless	Ankerspill	Guindeau
1	106	4mm x-veneér	3334L	Ankerspil	Anchorwindless	Ankerspill	Guindeau

2	107	1mm x-veneér	3338L	Styrhus	Cabin	Steuerhaus	Cabine
4	108	2mm x-veneér	3336L	Styrhus	Cabin	Steuerhaus	Cabine
2	109	1mm x-veneér	3338L	Styrhus	Cabin	Steuerhaus	Cabine
12	110	2mm x-veneér	3337L	Forstærkning	Strenghtening	Verstärkung	Renfort
2	111	1mm x-veneér	3338L	Ræling	Rail	Reling	Gouvernail
1	112	4mm x-veneér	3334L	Ankerspil	Anchorwindless	Ankerspill	Guindeau
14	113	2mm x-veneér	3336L	Konsol	Console	Konsole	Console
2	114	1mm x-veneér	3338L	Konsol	Console	Konsole	Console
2	115	1mm x-veneér	3338L	Konsol	Console	Konsole	Console
2	116	1mm x-veneér	3338L	Konsol	Console	Konsole	Console
2	117	1mm x-veneér	3338L	Konsol	Console	Konsole	Console
2	118	2mm x-veneér	3337L	Kasse	Box	Kiste	Caisse
2	119	1mm x-veneér	3338L	Kasse	Box	Kiste	Caisse
2	120	1mm x-veneér	3338L	Forstærkning	Strenghtening	Verstärkung	Renfort
2	121	1mm x-veneér	3338L	Forstærkning	Strenghtening	Verstärkung	Renfort
1	122	3mm x-veneér	3335L	Klyds	Fairlead	Klüsen	Ecubiérs
6	123	1mm x-veneér	3338L	Håndhjul	Hand-wheel	Sternrad	Poignée
2	124	1mm x-veneér	3338L	Lejder	Ladder	Leiter	Echelle
2	125	3mm x-veneér	3335L	Kasse	Box	Kiste	Caisse
1	126	1mm x-veneér	3338L	Kasse	Box	Kiste	Caisse
2	127	3mm x-veneér	3335L	Kasse	Box	Kiste	Caisse
1	128	1mm x-veneér	3338L	Kasse	Box	Kiste	Caisse
2	129	1mm x-veneér	3338L	Klyds	Fairlead	Klüsen	Ecubiérs
2	130	3mm x-veneér	3335L	Ankerspil	Anchorwindless	Ankerspill	Guindeau
4	131	1mm x-veneér	3338L	Ankerspil	Anchorwindless	Ankerspill	Guindeau
2	132	3mm x-veneér	3335L	Konsol	Console	Konsole	Console
2	133	2mm x-veneér	3337L	Forstærkning	Strenghtening	Verstärkung	Renfort
2	134	2mm x-veneér	3337L	Forstærkning	Strenghtening	Verstärkung	Renfort
2	135	2mm x-veneér	3337L	Forstærkning	Strenghtening	Verstärkung	Renfort
2	136	2mm x-veneér	3337L	Forstærkning	Strenghtening	Verstärkung	Renfort
2	137	2mm x-veneér	3337L	Forstærkning	Strenghtening	Verstärkung	Renfort
2	138	2mm x-veneér	3337L	Forstærkning	Strenghtening	Verstärkung	Renfort
2	139	1mm x-veneér	3338L	Pullert	Bollard	Poller	Bitte d'amarrage
2	140	1mm x-veneér	3338L	Pullert	Bollard	Poller	Bitte d'amarrage
2	141	1mm x-veneér	3338L	Pullert	Bollard	Poller	Bitte d'amarrage
1	142	1mm x-veneér	3338L	Sliske	Chute	Rutsche	Chute

6	143	4mm x-veneér	3334L	Kabelrulle	Wire reel	Kabeltrommeln	Bobines de câble
12	144	1mm x-veneér	3338L	Kabelrulle	Wire reel	Kabeltrommeln	Bobines de câble
12	145	1mm x-veneér	3338L	Kabelrulle	Wire reel	Kabeltrommeln	Bobines de câble
3	146	4mm x-veneér	3333L	Platform	Platform	Plattform	Plateforme
1	147	1mm x-veneér	3338L	Platform	Platform	Plattform	Plateforme
2	148	1mm x-veneér	3338L	Lanternebræt	For light	Laternenfuss	Pour feux de navigation
1	149	1mm x-veneér	3338L	Lanternebræt	For light	Laternenfuss	Pour feux de navigation
1	150	1mm x-veneér	3338L	Lejder	Ladder	Leiter	Echelle
1	151	2mm x-veneér	3337L	Konsol	Console	Konsole	Console
1	152	2mm x-veneér	3337L	Konsol	Console	Konsole	Console
1	153	1mm x-veneér	3338L	Lejder	Ladder	Leiter	Echelle
6	154	2mm x-veneér	3337L	Konsol	Console	Konsole	Console
1	155	1mm x-veneér	3338L	Lanternebræt	For light	Laternenfuss	Pour feux de navigation
4	156	5mm x-veneér	3332L	Kasse	Box	Kiste	Caisse
4	157	1mm x-veneér	3338L	Kasse	Box	Kiste	Caisse
1	158	3mm x-veneér	3335L	Spil	Winch	Winde	Treuil
2	159	3mm x-veneér	3335L	Spil	Winch	Winde	Treuil
1	160	3mm x-veneér	3335L	Spil	Winch	Winde	Treuil
1	161	3mm x-veneér	3335L	Spil	Winch	Winde	Treuil
1	162	2mm x-veneér	3336L	Spil	Winch	Winde	Treuil
1	163	4mm x-veneér	3334L	Spil	Winch	Winde	Treuil
2	164	1mm x-veneér	3338L	Spil	Winch	Winde	Treuil
3	165	3mm x-veneér	3335L	Spil	Winch	Winde	Treuil
1	166	1mm x-veneér	3338L	Spil	Winch	Winde	Treuil
2	167	1mm x-veneér	3338L	Spil	Winch	Winde	Treuil
1	168	3mm x-veneér	3335L	Spil	Winch	Winde	Treuil
1	169	5mm x-veneér	3332L	Spil	Winch	Winde	Treuil
1	170	5mm x-veneér	3332L	Spil	Winch	Winde	Treuil
1	171	1mm x-veneér	3338L	Spil	Winch	Winde	Treuil
1	172	4mm x-veneér	3334L	Spil	Winch	Winde	Treuil
1	173	1mm x-veneér	3338L	Spil	Winch	Winde	Treuil
1	174	2mm x-veneér	3337L	Spil	Winch	Winde	Treuil
1	175	1mm x-veneér	3338L	Spil	Winch	Winde	Treuil
1	176	1mm x-veneér	3338L	Spil	Winch	Winde	Treuil
1	177	1mm x-veneér	3338L	Spil	Winch	Winde	Treuil
1	178	1mm x-veneér	3338L	Spil	Winch	Winde	Treuil

1	179	1mm x-veneér	3338L	Spil	Winch	Winde	Treuil
1	180	1mm x-veneér	3338L	Spil	Winch	Winde	Treuil
1	181	1mm x-veneér	3338L	Spil	Winch	Winde	Treuil
1	182	2mm x-veneér	3337L	Spil	Winch	Winde	Treuil
1	183	2mm x-veneér	3336L	Dæk	Deck	Deck	Pont
2	184	2mm x-veneér	3337L	Styrhus	Cabin	Steuerhaus	Cabine
1	185	2mm x-veneér	3336L	Styrhus	Cabin	Steuerhaus	Cabine
1	186	2mm x-veneér	3337L	Dæk	Deck	Deck	Pont
2	187	1mm x-veneér	3338L	Styrhus	Cabin	Steuerhaus	Cabine
2	188	2mm x-veneér	3337L	Styrhus	Cabin	Steuerhaus	Cabine
1	189	2mm x-veneér	3337L	Dæk	Deck	Deck	Pont
1	190	4mm x-veneér	3334L	Styrhus	Cabin	Steuerhaus	Cabine
1	191	4mm x-veneér	3333L	Forstærkning	Strenghtening	Verstärkung	Renfort
1	192	3mm x-veneér	3335L	Styrhus	Cabin	Steuerhaus	Cabine
1	193	4mm x-veneér	3334L	Skorsten	Funnel	Schornstein	Cheminée
1	194	4mm x-veneér	3333L	Skorsten	Funnel	Schornstein	Cheminée
1	195	4mm x-veneér	3334L	Skorsten	Funnel	Schornstein	Cheminée
1	196	4mm x-veneér	3334L	Skorsten	Funnel	Schornstein	Cheminée
1	197	1mm x-veneér	3338L	Skorsten	Funnel	Schornstein	Cheminée
1	198	1mm x-veneér	3338L	Skorsten	Funnel	Schornstein	Cheminée
1	199	2mm x-veneér	3336L	Konsol	Console	Konsole	Console
1	200	3mm x-veneér	3335L	Bundplade	Sole-plate	Bodenplatte	Trolé borde des fonds
2	201	4mm x-veneér	3334L	Motorfundament	Engine console	Motorfundmanent	Moteur console
2	202	4mm x-veneér	3333L	Hjælpestykke	Auxiliary piece	Hilfsstücke	Pièce annexes
4	203	2mm x-veneér	3336L	Bedding	Slip	Helling	Cale de construction
4	204	4mm x-veneér	3334L	David	Davit	Davit	Bossoir
4	205	1mm x-veneér	3338L	David	Davit	Davit	Bossoir
4	206	1mm x-veneér	3338L	David	Davit	Davit	Bossoir
8	207	1mm x-veneér	3338L	David	Davit	Davit	Bossoir
4	208	2mm x-veneér	3337L	David	Davit	Davit	Bossoir
1	209	4mm x-veneér	3334L	Bedding	Slip	Helling	Cale de construction
1	210	4mm x-veneér	3334L	Bedding	Slip	Helling	Cale de construction
1	211	4mm x-veneér	3334L	Bedding	Slip	Helling	Cale de construction
1	212	4mm x-veneér	3334L	Bedding	Slip	Helling	Cale de construction
4	213	5mm x-veneér	3332L	Ring	Ring	Ring	Bague
1	214	3mm x-veneér	3335L	Hjælpestykke	Auxiliary piece	Hilfsstücke	Pièce annexes

1	215	5mm x-veneér	3332L	Spil	Winch	Winde	Treuil
1	216	1mm x-veneér	3338L	Ventil	Vent	Lüfter	Manche à áir
1	217	4mm x-veneér	3334L	Ventil	Vent	Lüfter	Manche à áir
1	218	2mm x-veneér	3337L	Ventil	Vent	Lüfter	Manche à áir
1	219	2mm x-veneér	3336L	Spil	Winch	Winde	Treuil
1	220	3mm x-veneér	3335L	Spil	Winch	Winde	Treuil
1	221	3mm x-veneér	3335L	Spil	Winch	Winde	Treuil
1	222	3mm x-veneér	3335L	Spil	Winch	Winde	Treuil
2	223	3mm x-veneér	3335L	Spil	Winch	Winde	Treuil
1	224	3mm x-veneér	3335L	Spil	Winch	Winde	Treuil
2	225	0,7x1x450mm	Mahogany	Liste	Strip	Leiste	Baguette
1	226	0,7x2x300mm	Mahogany	Liste	Strip	Leiste	Baguette
25	227	0,7x3x550mm	Annegre	Liste	Strip	Leiste	Baguette
1	228	2x2x550mm	Basswood	Liste	Strip	Leiste	Baguette
2	229	2x3x550mm	Basswood	Liste	Strip	Leiste	Baguette
38	230	2x10x550mm	Basswood	Beklædningsliste	Plankingstrips	Beplankung	Baguettes de bordé
1	231	ø2x130mm	Basswood	Rundstok	Round stick	Rundstab	Baguette ronde
1	232	ø3x120mm	Basswood	Rundstok	Round stick	Rundstab	Baguette ronde
1	233	ø4x400mm	Basswood	Rundstok	Round stick	Rundstab	Baguette ronde
1	234	ø5x365mm	Basswood	Rundstok	Round stick	Rundstab	Baguette ronde
1	235	ø6x160mm	Basswood	Rundstok	Round stick	Rundstab	Baguette ronde
1	236	ø8x200mm	Basswood	Rundstok	Round stick	Rundstab	Baguette ronde
1	237	100x100mm	White	Presenning	Tarpaulin	Presenning	Bâche
1	B2-57	ø5x11mm	Brass	Motor	Engine	Motor	Moteur
1	B2-153	ø9x17,5mm	Brass	Motor	Engine	Motor	Moteur
1	B2-154	ø6x13mm	Brass	Motor	Engine	Motor	Moteur
1	F 22a	ø0,5x2500mm	Copper	Kobbertråd	Copperthread	Kupferdraht	Fils de cuivre
2	F 37	28x15x7mm	Plastic	Anker	Anchor	Anker	Ancre
2	F 37-1	3x5x34mm	Plastic	Ankerstok	Stock	Stock	Jas
4	F 39	ø1x250mm	Brass	Messingtråd	Brasswire	Messingdraht	Fils de laiton
1	F 39-10	Ø1x100mm	Brass	Messingtråd	Brasswire	Messingdraht	Fils de laiton
2	F 41	12mm	Plastic	Klyds	Open chock	Klüsen	Ecubiérs
1	F 52	ø9mm	Plastic	Kompas	Compass	Kompas	Compass
1	F 59-1	20mm	Wood	Kompas	Compass	Kompas	Compass
2	F 62	ø4mm	Brass	Rulle	Pulley	Rollen	Poulie
1	F 70	ø0,3x500mm		Rigningstråd	Riggingthread	Takelgarn	Fil de greement

1	F 71	ø0,5x1000mm		Rigningstråd	Riggingthread	Takelgarn	Fil de greement
1	F 73	ø1,2x500mm		Rigningstråd	Riggingthread	Takelgarn	Fil de greement
1	F 76	150mm	Brass	Kæde	Chain	Kette	Chaine
4	F 100	ø4mm	Brass	Lanterne	Lights	Lanternen	Feux de navigation
2	F 101	ø5x5,5mm	Brass	Projektør	Searchlight	Scheinwerfer	Projecteur
8	F 136	12x12mm	Plastic	Redningsbælte	Lifebelts	Rettungsringe	Bouée
1	F 160	ø5x128mm	Brass	Skrueaksel	Propeller shaft	Stevenroller	Abre porte
2	F 167/1	25x95mm	Plastic	Redningsbåd	Life boat	Rettungsboot	Chaloupe ponté
2	F 167/2	88x21mm	Plastic	Redningsbåd	Life boat	Rettungsboot	Chaloupe ponté
1	F 225	11mm	Brass	Lanterne	Lights	Lanternen	Feux de navigation
2	F 230	8mm	Brass	Søm	Brassbrads	Messingnägel	Clou de laiton
1	F 285	5,5mm	Brass	Øjebolte	Eye-bolts	Augenbolzen	Pitons
12	F 317	ø4mm	Brass	Koøje	Portlights	Bullaugen	Hublot
4	F 374	ø4mm	Brass	Rulle	Pulley	Rollen	Poulie
2	F 378	ø4mm	Brass	Konisk skive	Conical Disk	Konische Scheibe	Disque conique
1	F 379	ø5x1,8mm	Brass	Konisk skive	Conical Disk	Konische Scheibe	Disque conique
1	F 380	ø7x2,2mm	Brass	Konisk skive	Conical Disk	Konische Scheibe	Disque conique
2	F 409	ø1,5x250mm	Brass	Messingtråd	Brasswire	Messingdraht	Fils de laiton
1	F 410	ø2x250mm	Brass	Messingtråd	Brasswire	Messingdraht	Fils de laiton
63	F 493	15mm	Brass	Gelænderstøtte	Railstanchion	Relingsstützen	Chandeliers
1	F 582	ø4x84mm	Brass	Rorstamme	Rudder stock	Ruderstamm	Arbre étambot de
6	F 594	ø8mm	Brass	Spilkop	Warping end	Spillkopf	Tambour
2	F 605	ø8x6mm	Brass	Rulle	Pulley	Rollen	Poulie
12	F 615	ø4x7mm	Brass	Pullert	Bollard	Poller	Bitte d'amarrage
7	F 616	ø4x4mm	Brass	Lanterne	Lights	Lanternen	Feux de navigation
2	F 637	ø8x12mm	Brass	Megafon	Megaphone	Megaphone	Mégaphone
2	F 645	ø8x2,5mm	Brass	Tandhjul	Cog wheel	Zahnräder	Roue dentée
2	F 651	ø7mm	Plastic	Håndhjul	Hand-wheel	Sternrad	Poignée
1	F 656	ø5x210mm	Brass	Skrueaksel	Propeller shaft	Stevenroller	Abre porte
2	F 661	ø4mm	Brass	Tandhjul	Cog wheel	Zahnräder	Roue dentée
15	F 663	ø0,8x250mm	Brass	Messingtråd	Brasswire	Messingdraht	Fils de laiton
21	F 664	ø0,5x11mm	Copper	Øjebolt	Eye bolt	Augenbolzen	Pitons
3	F 706	ø15x8mm	Brass	Ventil	Vent	Lüfter	Manche à áir
1	F 715-10	ø2x100mm	Brass	Messingrør	Brass pipes	Messingrohr	Tuyaux en laiton
16	F 893	ø4x5,5mm	Brass	Ventil	Vent	Lüfter	Manche à áir
4	F 918	Ø2x2mm	Brass	Ring	Ring	Ring	Bague
4	F 922	Ø3x2mm	Brass	Ring	Ring	Ring	Bague

2	F 924	Ø5x2mm	Brass	Ring	Ring	Ring	Bague
4	F 971	ø4,4x4,3mm	Brass	Ventil	Vent	Lüfter	Manche à áir
2	F 973	ø6,5x6,3mm	Brass	Ventil	Vent	Lüfter	Manche à áir
2	F 974	ø8,5x7,75mm	Brass	Ventil	Vent	Lüfter	Manche à áir
1	F 1008	ø30mm	Brass	Skrue	Propeller	Schiffsschraube	Hélice
1	F 1009	ø50mm	Brass	Skrue	Propeller	Schiffsschraube	Hélice
1	TR 184			Transfer	Transfer	Abziehbild	Decals
1		200x50mm		Acetat	Acetate	Azetat	Rhodoid
1		A4		Byggevejledning	Building instruction	Bauanleitung	Instr.de montage
1	50-50110	700x1000mm		Hovedtegning Plan 1	Maindrawing 1	Zeichnung 1	Plan 1

Table contents for “Elbjørn” Art. No. 536

Pcs.	No.	Dimension	Material	NL	E	I	P
1	1	4mm x-veneér	3333L	Kiel	Quilla	Chiglia	Quilha
1	2	4mm x-veneér	3334L	Kiel	Quilla	Chiglia	Quilha
1	3	4mm x-veneér	3334L	Kiel	Quilla	Chiglia	Quilha
1	4	4mm x-veneér	3334L	Spant	Cuaderna	Ordinata	Armacao
1	5	4mm x-veneér	3333L	Spant	Cuaderna	Ordinata	Armacao
1	6	4mm x-veneér	3333L	Spant	Cuaderna	Ordinata	Armacao
1	7	4mm x-veneér	3334L	Spant	Cuaderna	Ordinata	Armacao
1	8	4mm x-veneér	3333L	Spant	Cuaderna	Ordinata	Armacao
1	9	4mm x-veneér	3333L	Spant	Cuaderna	Ordinata	Armacao
1	10	4mm x-veneér	3333L	Spant	Cuaderna	Ordinata	Armacao
1	11	4mm x-veneér	3333L	Spant	Cuaderna	Ordinata	Armacao
1	12	4mm x-veneér	3334L	Spant	Cuaderna	Ordinata	Armacao
1	13	4mm x-veneér	3334L	Spant	Cuaderna	Ordinata	Armacao
1	14	4mm x-veneér	3333L	Spant	Cuaderna	Ordinata	Armacao
1	15	4mm x-veneér	3333L	Spant	Cuaderna	Ordinata	Armacao
1	16	4mm x-veneér	3334L	Spant	Cuaderna	Ordinata	Armacao
1	17	4mm x-veneér	3333L	Spant	Cuaderna	Ordinata	Armacao
2	18	4mm x-veneér	3333L	Versterkenen	Refuerzo	Rinforzo	Reforço
2	19	3mm x-veneér	3335L	Vulstukken	Trozo de ayuda	Pezzo ausiliario	Peças auxiliares
1	20	5mm x-veneér	3332L	Konsolel, servo	Consolal, servo	Consollel, servo	Consolel, servo
2	21	3mm x-veneér	3335L	Vulstukken	Trozo de ayuda	Pezzo ausiliario	Peças auxiliares
1	22	2mm x-veneér	3337L	Dek	Cubierta	Ponte	Convés
1	23	2mm x-veneér	3337L	Schot	Manparo	Paratia	Parede

1	24	2mm x-veneér	3336L	Dek	Cubierta	Ponte	Convés
1	25	2mm x-veneér	3337L	Luiken	Escoutilla	Boccaporto	Escotilha
1	26	2mm x-veneér	3337L	Luiken	Escoutilla	Boccaporto	Escotilha
2	27	4mm x-veneér	3333L	Vulstukken	Trozo de ayuda	Pezzo ausiliario	Peças auxiliares
2	28	4mm x-veneér	3334L	Vulstukken	Trozo de ayuda	Pezzo ausiliario	Peças auxiliares
1	29	4mm x-veneér	3333L	Roer	Timón	Timone	Leme
1	30	2mm x-veneér	3336L	Stuurhuis	Caseta de navegación	Cabina pilotaggio	Frente da cabine superior
2	31	2mm x-veneér	3336L	Stuurhuis	Caseta de navegación	Cabina pilotaggio	Frente da cabine superior
2	32	2mm x-veneér	3337L	Stuurhuis	Caseta de navegación	Cabina pilotaggio	Frente da cabine superior
2	33	2mm x-veneér	3336L	Stuurhuis	Caseta de navegación	Cabina pilotaggio	Frente da cabine superior
1	34	2mm x-veneér	3336L	Stuurhuis	Caseta de navegación	Cabina pilotaggio	Frente da cabine superior
1	35	2mm x-veneér	3337L	Stuurhuis	Caseta de navegación	Cabina pilotaggio	Frente da cabine superior
1	36	1mm x-veneér	3338L	Stuurhuis	Caseta de navegación	Cabina pilotaggio	Frente da cabine superior
2	37	1mm x-veneér	3338L	Stuurhuis	Caseta de navegación	Cabina pilotaggio	Frente da cabine superior
2	38	1mm x-veneér	3338L	Stuurhuis	Caseta de navegación	Cabina pilotaggio	Frente da cabine superior
2	39	1mm x-veneér	3338L	Stuurhuis	Caseta de navegación	Cabina pilotaggio	Frente da cabine superior
1	40	1mm x-veneér	3338L	Stuurhuis	Caseta de navegación	Cabina pilotaggio	Frente da cabine superior
2	41	2mm x-veneér	3336L	Loods	Casa de motor	Casa motore	Casa de máquinas
1	42	2mm x-veneér	3336L	Loods	Casa de motor	Casa motore	Casa de máquinas
1	43	2mm x-veneér	3336L	Loods	Casa de motor	Casa motore	Casa de máquinas
1	44	2mm x-veneér	3336L	Loods	Casa de motor	Casa motore	Casa de máquinas
1	45	2mm x-veneér	3337L	Loods	Casa de motor	Casa motore	Casa de máquinas
4	46	5mm x-veneér	3332L	Loods	Casa de motor	Casa motore	Casa de máquinas
1	47	2mm x-veneér	3337L	Loods	Casa de motor	Casa motore	Casa de máquinas
4	48	1mm x-veneér	3338L	Loods	Casa de motor	Casa motore	Casa de máquinas
8	49	1mm x-veneér	3338L	Deur	Puerta	Portelle	Porta
6	50	4mm x-veneér	3334L	Bovenlicht	Lumbrera	Osteriggio	Clarabóia
2	51	1mm x-veneér	3338L	Bovenlicht	Lumbrera	Osteriggio	Clarabóia
2	52	1mm x-veneér	3338L	Rompbekleding	Listónes de forro	Listelli fasciame	Tiras
2	53	1mm x-veneér	3338L	Rompbekleding	Listónes de forro	Listelli fasciame	Tiras
2	54	1mm x-veneér	3338L	Rompbekleding	Listónes de forro	Listelli fasciame	Tiras
1	55	1mm x-veneér	3338L	Reling	Borda	Parapetto	Amurada
1	56	2mm x-veneér	3336L	Kiel	Quilla	Chiglia	Quilha
1	57	4mm x-veneér	3333L	Platform	Plataforma	Piattaforma	Plataforma
1	58	4mm x-veneér	3333L	Luiken	Escoutilla	Boccaporto	Escotilha
1	59	5mm x-veneér	3332L	Luiken	Escoutilla	Boccaporto	Escotilha

1	60	1mm x-veneér	3338L	Luiken	Escoutilla	Boccaporto	Escotilha
2	61	5mm x-veneér	3332L	Luiken	Escoutilla	Boccaporto	Escotilha
1	62	1mm x-veneér	3338L	Luiken	Escoutilla	Boccaporto	Escotilha
2	63	1mm x-veneér	3338L	Stuurhuis	Caseta de navegación	Cabina pilotaggio	Frente da cabine superior
1	64	1mm x-veneér	3338L	Stuurhuis	Caseta de navegación	Cabina pilotaggio	Frente da cabine superior
2	65	1mm x-veneér	3338L	Ladder	Escala	Scaletta	Escada
2	66	1mm x-veneér	3338L	Stuurhuis	Caseta de navegación	Cabina pilotaggio	Frente da cabine superior
2	67	1mm x-veneér	3338L	Bolder-fundament	Bitones-placa de fondo	Base del bitta	Poste de amarracão/base
4	68	1mm x-veneér	3338L	Bolder-fundament	Bitones-placa de fondo	Base del bitta	Poste de amarracão/base
2	69	1mm x-veneér	3338L	Bolder-fundament	Bitones-placa de fondo	Base del bitta	Poste de amarracão/base
4	70	1mm x-veneér	3338L	Bolder	Bitón	Bitta	Abita
1	71	1mm x-veneér	3338L	Antenne	Antena	Antenna	Antena
1	72	2mm x-veneér	3337L	Trapafgang	Bajada	Scaletta di boccaporto	Escotilha de descida
1	73	4mm x-veneér	3334L	Trapafgang	Bajada	Scaletta di boccaporto	Escotilha de descida
8	74	1mm x-veneér	3338L	Standaard	Grada	Supporto	Pé do Suporte de Casco
2	75	1mm x-veneér	3338L	Trapafgang	Bajada	Scaletta di boccaporto	Escotilha de descida
2	76	1mm x-veneér	3338L	Trapafgang	Bajada	Scaletta di boccaporto	Escotilha de descida
4	77	5mm x-veneér	3332L	Trapafgang	Bajada	Scaletta di boccaporto	Escotilha de descida
2	78	1mm x-veneér	3338L	Stuurhuis	Caseta de navegación	Cabina pilotaggio	Frente da cabine superior
2	79	1mm x-veneér	3338L	Stuurhuis	Caseta de navegación	Cabina pilotaggio	Frente da cabine superior
2	80	1mm x-veneér	3338L	Deur	Puerta	Portelle	Porta
2	81	1mm x-veneér	3338L	Ladder	Escala	Scaletta	Escada
1	82	3mm x-veneér	3335L	Vulstukken	Trozo de ayuda	Pezzo ausiliario	Peças auxiliares
2	83	2mm x-veneér	3336L	Ankerbak	Pozo de ancla	Gavone ancora	Caixa de âncora
2	84	2mm x-veneér	3336L	Ankerbak	Pozo de ancla	Gavone ancora	Caixa de âncora
2	85	2mm x-veneér	3336L	Ankerbak	Pozo de ancla	Gavone ancora	Caixa de âncora
2	86	2mm x-veneér	3336L	Ankerbak	Pozo de ancla	Gavone ancora	Caixa de âncora
4	87	1mm x-veneér	3338L	Trap	Escalera	Scala	Escadaria
28	88	1mm x-veneér	3338L	Trap	Escalera	Scala	Escadaria
1	89	1mm x-veneér	3338L	Radar	Radar	Radar	Radar
2	90	1mm x-veneér	3338L	Radar	Radar	Radar	Radar
2	91	4mm x-veneér	3334L	Radar	Radar	Radar	Radar
2	92	3mm x-veneér	3335L	Radar	Radar	Radar	Radar
1	93	1mm x-veneér	3338L	Radar	Radar	Radar	Radar
2	94	2mm x-veneér	3337L	Luchtkoker	Válvula	Valvola	Respiradouro
2	95	2mm x-veneér	3337L	Luchtkoker	Válvula	Valvola	Respiradouro

1	96	2mm x-veneér	3337L	Luchtkoker	Válvula	Valvola	Respiradouro
1	97	2mm x-veneér	3337L	Luchtkoker	Válvula	Valvola	Respiradouro
3	98	1mm x-veneér	3338L	Luchtkoker	Válvula	Valvola	Respiradouro
1	99	1mm x-veneér	3338L	Schot	Manparo	Paratia	Parede
4	100	1mm x-veneér	3338L	Trap	Escalera	Scala	Escadaria
3	101	1mm x-veneér	3338L	Deur	Puerta	Portelle	Porta
2	102	2mm x-veneér	3337L	Versterkenen	Refuerzo	Rinforzo	Reforço
2	103	2mm x-veneér	3337L	Versterkenen	Refuerzo	Rinforzo	Reforço
1	104	2mm x-veneér	3337L	Ankerwinch	Chigre de ancla	Argano dell'ancora	guincho da âncora
2	105	1mm x-veneér	3338L	Ankerwinch	Chigre de ancla	Argano dell'ancora	guincho da âncora
1	106	4mm x-veneér	3334L	Ankerwinch	Chigre de ancla	Argano dell'ancora	guincho da âncora
2	107	1mm x-veneér	3338L	Stuurhuis	Caseta de navegación	Cabina pilotaggio	Frente da cabine superior
4	108	2mm x-veneér	3336L	Stuurhuis	Caseta de navegación	Cabina pilotaggio	Frente da cabine superior
2	109	1mm x-veneér	3338L	Stuurhuis	Caseta de navegación	Cabina pilotaggio	Frente da cabine superior
12	110	2mm x-veneér	3337L	Versterkenen	Refuerzo	Rinforzo	Reforço
2	111	1mm x-veneér	3338L	Reling	Borda	Parapetto	Amurada
1	112	4mm x-veneér	3334L	Ankerwinch	Chigre de ancla	Argano dell'ancora	guincho da âncora
14	113	2mm x-veneér	3336L	Konsole	Consola	Consolle	Console
2	114	1mm x-veneér	3338L	Konsole	Consola	Consolle	Console
2	115	1mm x-veneér	3338L	Konsole	Consola	Consolle	Console
2	116	1mm x-veneér	3338L	Konsole	Consola	Consolle	Console
2	117	1mm x-veneér	3338L	Konsole	Consola	Consolle	Console
2	118	2mm x-veneér	3337L	Kist	Caja	Cassa	Baú
2	119	1mm x-veneér	3338L	Kist	Caja	Cassa	Baú
2	120	1mm x-veneér	3338L	Versterkenen	Refuerzo	Rinforzo	Reforço
2	121	1mm x-veneér	3338L	Versterkenen	Refuerzo	Rinforzo	Reforço
1	122	3mm x-veneér	3335L	Kluisgat	Galápago	Rinforzo	Tubo do escovém
6	123	1mm x-veneér	3338L	Hand-weil	Volante	Volante	Volante do timão
2	124	1mm x-veneér	3338L	Ladder	Escala	Scaletta	Escada
2	125	3mm x-veneér	3335L	Kist	Caja	Cassa	Baú
1	126	1mm x-veneér	3338L	Kist	Caja	Cassa	Baú
2	127	3mm x-veneér	3335L	Kist	Caja	Cassa	Baú
1	128	1mm x-veneér	3338L	Kist	Caja	Cassa	Baú
2	129	1mm x-veneér	3338L	Kluisgat	Galápago	Rinforzo	Tubo do escovém
2	130	3mm x-veneér	3335L	Ankerwinch	Chigre de ancla	Argano dell'ancora	guincho da âncora
4	131	1mm x-veneér	3338L	Ankerwinch	Chigre de ancla	Argano dell'ancora	guincho da âncora

2	132	3mm x-veneér	3335L	Konsole	Consola	Consolle	Console
2	133	2mm x-veneér	3337L	Versterkenen	Refuerzo	Rinforzo	Reforço
2	134	2mm x-veneér	3337L	Versterkenen	Refuerzo	Rinforzo	Reforço
2	135	2mm x-veneér	3337L	Versterkenen	Refuerzo	Rinforzo	Reforço
2	136	2mm x-veneér	3337L	Versterkenen	Refuerzo	Rinforzo	Reforço
2	137	2mm x-veneér	3337L	Versterkenen	Refuerzo	Rinforzo	Reforço
2	138	2mm x-veneér	3337L	Versterkenen	Refuerzo	Rinforzo	Reforço
2	139	1mm x-veneér	3338L	Bolder	Bitón	Bitta	Abita
2	140	1mm x-veneér	3338L	Bolder	Bitón	Bitta	Abita
2	141	1mm x-veneér	3338L	Bolder	Bitón	Bitta	Abita
1	142	1mm x-veneér	3338L	Chute	Tolva	Scivolo	Calha
6	143	4mm x-veneér	3334L	Kabelhaspels	Carretes de cable	Bobine di cavo	bobinas de cabo
12	144	1mm x-veneér	3338L	Kabelhaspels	Carretes de cable	Bobine di cavo	bobinas de cabo
12	145	1mm x-veneér	3338L	Kabelhaspels	Carretes de cable	Bobine di cavo	bobinas de cabo
3	146	4mm x-veneér	3333L	Platform	Plataforma	Piattaforma	Plataforma
1	147	1mm x-veneér	3338L	Platform	Plataforma	Piattaforma	Plataforma
2	148	1mm x-veneér	3338L	Voor boordlichten	Pantella de linterna	Per la lanterna di bordo	Luz de navegação
1	149	1mm x-veneér	3338L	Voor boordlichten	Pantella de linterna	Per la lanterna di bordo	Luz de navegação
1	150	1mm x-veneér	3338L	Ladder	Escala	Scaletta	Escada
1	151	2mm x-veneér	3337L	Konsole	Consola	Consolle	Console
1	152	2mm x-veneér	3337L	Konsole	Consola	Consolle	Console
1	153	1mm x-veneér	3338L	Ladder	Escala	Scaletta	Escada
6	154	2mm x-veneér	3337L	Konsole	Consola	Consolle	Console
1	155	1mm x-veneér	3338L	Voor boordlichten	Pantella de linterna	Per la lanterna di bordo	Luz de navegação
4	156	5mm x-veneér	3332L	Kist	Caja	Cassa	Baú
4	157	1mm x-veneér	3338L	Kist	Caja	Cassa	Baú
1	158	3mm x-veneér	3335L	Winch	Chigre	Argano	Guincho
2	159	3mm x-veneér	3335L	Winch	Chigre	Argano	Guincho
1	160	3mm x-veneér	3335L	Winch	Chigre	Argano	Guincho
1	161	3mm x-veneér	3335L	Winch	Chigre	Argano	Guincho
1	162	2mm x-veneér	3336L	Winch	Chigre	Argano	Guincho
1	163	4mm x-veneér	3334L	Winch	Chigre	Argano	Guincho
2	164	1mm x-veneér	3338L	Winch	Chigre	Argano	Guincho
3	165	3mm x-veneér	3335L	Winch	Chigre	Argano	Guincho
1	166	1mm x-veneér	3338L	Winch	Chigre	Argano	Guincho
2	167	1mm x-veneér	3338L	Winch	Chigre	Argano	Guincho

1	168	3mm x-veneér	3335L	Winch	Chigre	Argano	Guincho
1	169	5mm x-veneér	3332L	Winch	Chigre	Argano	Guincho
1	170	5mm x-veneér	3332L	Winch	Chigre	Argano	Guincho
1	171	1mm x-veneér	3338L	Winch	Chigre	Argano	Guincho
1	172	4mm x-veneér	3334L	Winch	Chigre	Argano	Guincho
1	173	1mm x-veneér	3338L	Winch	Chigre	Argano	Guincho
1	174	2mm x-veneér	3337L	Winch	Chigre	Argano	Guincho
1	175	1mm x-veneér	3338L	Winch	Chigre	Argano	Guincho
1	176	1mm x-veneér	3338L	Winch	Chigre	Argano	Guincho
1	177	1mm x-veneér	3338L	Winch	Chigre	Argano	Guincho
1	178	1mm x-veneér	3338L	Winch	Chigre	Argano	Guincho
1	179	1mm x-veneér	3338L	Winch	Chigre	Argano	Guincho
1	180	1mm x-veneér	3338L	Winch	Chigre	Argano	Guincho
1	181	1mm x-veneér	3338L	Winch	Chigre	Argano	Guincho
1	182	2mm x-veneér	3337L	Winch	Chigre	Argano	Guincho
1	183	2mm x-veneér	3336L	Dek	Cubierta	Ponte	Convés
2	184	2mm x-veneér	3337L	Stuurhuis	Caseta de navegación	Cabina pilotaggio	Frente da cabine superior
1	185	2mm x-veneér	3336L	Stuurhuis	Caseta de navegación	Cabina pilotaggio	Frente da cabine superior
1	186	2mm x-veneér	3337L	Dek	Cubierta	Ponte	Convés
2	187	1mm x-veneér	3338L	Stuurhuis	Caseta de navegación	Cabina pilotaggio	Frente da cabine superior
2	188	2mm x-veneér	3337L	Stuurhuis	Caseta de navegación	Cabina pilotaggio	Frente da cabine superior
1	189	2mm x-veneér	3337L	Dek	Cubierta	Ponte	Convés
1	190	4mm x-veneér	3334L	Stuurhuis	Caseta de navegación	Cabina pilotaggio	Frente da cabine superior
1	191	4mm x-veneér	3333L	Versterkenen	Refuerzo	Rinforzo	Reforço
1	192	3mm x-veneér	3335L	Stuurhuis	Caseta de navegación	Cabina pilotaggio	Frente da cabine superior
1	193	4mm x-veneér	3334L	Schoorsteen	Chimenea	Camino	Chaminé
1	194	4mm x-veneér	3333L	Schoorsteen	Chimenea	Camino	Chaminé
1	195	4mm x-veneér	3334L	Schoorsteen	Chimenea	Camino	Chaminé
1	196	4mm x-veneér	3334L	Schoorsteen	Chimenea	Camino	Chaminé
1	197	1mm x-veneér	3338L	Schoorsteen	Chimenea	Camino	Chaminé
1	198	1mm x-veneér	3338L	Schoorsteen	Chimenea	Camino	Chaminé
1	199	2mm x-veneér	3336L	Konsole	Consola	Consolle	Console
1	200	3mm x-veneér	3335L	Boden-plaat	Placa de fondo	Base per bitta	Caixa da bateria
2	201	4mm x-veneér	3334L	Motor console	Soporto de Motor	Base del motore	Console do motor
2	202	4mm x-veneér	3333L	Vulstukken	Trozo de ayuda	Pezzo ausiliario	Peças auxiliares
4	203	2mm x-veneér	3336L	Standaard	Grada	Supporto	Pé do Suporte de Casco

4	204	4mm x-veneér	3334L	Davit	Pescante	Buttafuori	Serviola
4	205	1mm x-veneér	3338L	Davit	Pescante	Buttafuori	Serviola
4	206	1mm x-veneér	3338L	Davit	Pescante	Buttafuori	Serviola
8	207	1mm x-veneér	3338L	Davit	Pescante	Buttafuori	Serviola
4	208	2mm x-veneér	3337L	Davit	Pescante	Buttafuori	Serviola
1	209	4mm x-veneér	3334L	Standaard	Grada	Supporto	Pé do Suporte de Casco
1	210	4mm x-veneér	3334L	Standaard	Grada	Supporto	Pé do Suporte de Casco
1	211	4mm x-veneér	3334L	Standaard	Grada	Supporto	Pé do Suporte de Casco
1	212	4mm x-veneér	3334L	Standaard	Grada	Supporto	Pé do Suporte de Casco
4	213	5mm x-veneér	3332L	Ring	Argolla	Anello	Anel
1	214	3mm x-veneér	3335L	Vulstukken	Trozo de ayuda	Pezzo ausiliario	Peças auxiliares
1	215	5mm x-veneér	3332L	Winch	Chigre	Argano	Guincho
1	216	1mm x-veneér	3338L	Luchtkoker	Válvula	Valvola	Respiradouro
1	217	4mm x-veneér	3334L	Luchtkoker	Válvula	Valvola	Respiradouro
1	218	2mm x-veneér	3337L	Luchtkoker	Válvula	Valvola	Respiradouro
1	219	2mm x-veneér	3336L	Winch	Chigre	Argano	Guincho
1	220	3mm x-veneér	3335L	Winch	Chigre	Argano	Guincho
1	221	3mm x-veneér	3335L	Winch	Chigre	Argano	Guincho
1	222	3mm x-veneér	3335L	Winch	Chigre	Argano	Guincho
2	223	3mm x-veneér	3335L	Winch	Chigre	Argano	Guincho
1	224	3mm x-veneér	3335L	Winch	Chigre	Argano	Guincho
2	225	0,7x1x450mm	Mahogany	Strip	Liston	Listello	Tira
1	226	0,7x2x300mm	Mahogany	Strip	Liston	Listello	Tira
25	227	0,7x3x550mm	Annegre	Strip	Liston	Listello	Tira
1	228	2x2x550mm	Basswood	Strip	Liston	Listello	Tira
2	229	2x3x550mm	Basswood	Strip	Liston	Listello	Tira
38	230	2x10x550mm	Basswood	Rompbekleding	Listónes de forro	Listelli fasciame	Tiras
1	231	ø2x130mm	Basswood	Rondhout	Barre reronda	Rondino (listello)	Bastão cilíndrico
1	232	ø3x120mm	Basswood	Rondhout	Barre reronda	Rondino (listello)	Bastão cilíndrico
1	233	ø4x400mm	Basswood	Rondhout	Barre reronda	Rondino (listello)	Bastão cilíndrico
1	234	ø5x365mm	Basswood	Rondhout	Barre reronda	Rondino (listello)	Bastão cilíndrico
1	235	ø6x160mm	Basswood	Rondhout	Barre reronda	Rondino (listello)	Bastão cilíndrico
1	236	ø8x200mm	Basswood	Rondhout	Barre reronda	Rondino (listello)	Bastão cilíndrico
1	237	100x100mm	White	Dekzeil	Tela impermeable	Tela olona	Lona do bote
1	B2-57	ø5x11mm	Brass	Motor	Motor	Motore	Motor
1	B2-153	ø9x17,5mm	Brass	Motor	Motor	Motore	Motor

1	B2-154	ø6x13mm	Brass	Motor	Motor	Motore	Motor
1	F 22a	ø0,5x2500mm	Copper	Koperdraad	Alambre de cabre	Filo in rame	Linha de cobre
2	F 37	28x15x7mm	Plastic	Anker	Ancla	Ancora	Ferro
2	F 37-1	3x5x34mm	Plastic	Stok	Cepo	Ceppo	Ceppo de ferro
4	F 39	ø1x250mm	Brass	Messingdraad	Hilo de laton	Filo in ottone	Fio de latão
1	F 39-10	Ø1x100mm	Brass	Messingdraad	Hilo de laton	Filo in ottone	Fio de latão
2	F 41	12mm	Plastic	Verhaalklampen	Bocina	Passacavi	Escovéns
1	F 52	ø9mm	Plastic	Kompass	Brujula	Bussola	Compasso
1	F 59-1	20mm	Wood	Kompass	Brujula	Bussola	Compasso
2	F 62	ø4mm	Brass	Rollen	Rodillos	Pulegge	Polia
1	F 70	ø0,3x500mm		Takelgaren	Hilo de oparejo	Filo per manovre	Linha de cordame
1	F 71	ø0,5x1000mm		Takelgaren	Hilo de oparejo	Filo per manovre	Linha de cordame
1	F 73	ø1,2x500mm		Takelgaren	Hilo de oparejo	Filo per manovre	Linha de cordame
1	F 76	150mm	Brass	Ketting	Cadena	Catena	Corrente
4	F 100	ø4mm	Brass	Boordlichten	Linternas	Lanterna di bordo	Luzes
2	F 101	ø5x5,5mm	Brass	Schijnwerper	Foco	Proiettore	Holofote
8	F 136	12x12mm	Plastic	Reddingsboei	Cinturones salvavidas	Cintura di salvataggio	Bóia salva-vidas
1	F 160	ø5x128mm	Brass	Schroefas	Je de helice	Albero porta-elica	Eixo da hélice
2	F 167/1	25x95mm	Plastic	Reddingsboot	Bote salvavida	Battello di salvataggio	Barco salva-vidas
2	F 167/2	88x21mm	Plastic	Reddingsboot	Bote salvavida	Battello di salvataggio	Barco salva-vidas
1	F 225	11mm	Brass	Boordlichten	Linternas	Lanterna di bordo	Luzes
2	F 230	8mm	Brass	Spijkertjes	Clavo	Chiodi	Pino
1	F 285	5,5mm	Brass	Oogbauten	Pernos de cánamo	Bulloni ad occhio	Pontalete da amurada
12	F 317	ø4mm	Brass	Patrijspoort	Potillas	Oblò	Aro de escotilha
4	F 374	ø4mm	Brass	Rollen	Rodillos	Pulegge	Polia
2	F 378	ø4mm	Brass	Conische schijf	Disco conico	Disco conico	Disco cônico
1	F 379	ø5x1,8mm	Brass	Conische schijf	Disco conico	Disco conico	Disco cônico
1	F 380	ø7x2,2mm	Brass	Conische schijf	Disco conico	Disco conico	Disco cônico
2	F 409	ø1,5x250mm	Brass	Messingdraad	Hilo de laton	Filo in ottone	Fio de latão
1	F 410	ø2x250mm	Brass	Messingdraad	Hilo de laton	Filo in ottone	Fio de latão
63	F 493	15mm	Brass	Railingspalen	Soporte de pasamanos	Supporti per corrimano	Pontalete da amurada
1	F 582	ø4x84mm	Brass	Roerkoning	Tronco del timon	Tronco del timone	Suporte do timão
6	F 594	ø8mm	Brass	Spilkop	Tambor de cabrestante	Testa argano	Terminal
2	F 605	ø8x6mm	Brass	Rollen	Rodillos	Pulegge	Polia
12	F 615	ø4x7mm	Brass	Bolder	Bitón	Bitta	Abita
7	F 616	ø4x4mm	Brass	Boordlichten	Linternas	Lanterna di bordo	Luzes

2	F 637	ø8x12mm	Brass	Megafhone	Megaphone	Megafono	Megafone
2	F 645	ø8x2,5mm	Brass	Tandrad	Rueda dentada	Ruota dentata	Roda dentada
2	F 651	ø7mm	Plastic	Hand-weil	Volante	Volante	Volante do timão
1	F 656	ø5x210mm	Brass	Schroefas	Je de helice	Albero porta-elica	Eixo da hélice
2	F 661	ø4mm	Brass	Tandrad	Rueda dentada	Ruota dentata	Roda dentada
15	F 663	ø0,8x250mm	Brass	Messingdraad	Hilo de laton	Filo in ottone	Fio de latão
21	F 664	ø0,5x11mm	Copper	Oogbauten	Pernos de cáncamo	Bullone ad occhio	Ferrolho
3	F 706	ø15x8mm	Brass	Luchtkoker	Válvula	Valvola	Respiradouro
1	F 715-10	ø2x100mm	Brass	Messingbeslag	Tubo de laton	Tubo in ottone	Tubos de latão
16	F 893	ø4x5,5mm	Brass	Luchtkoker	Válvula	Valvola	Respiradouro
4	F 918	Ø2x2mm	Brass	Ring	Argolla	Anello	Anel
4	F 922	Ø3x2mm	Brass	Ring	Argolla	Anello	Anel
2	F 924	Ø5x2mm	Brass	Ring	Argolla	Anello	Anel
4	F 971	ø4,4x4,3mm	Brass	Luchtkoker	Válvula	Valvola	Respiradouro
2	F 973	ø6,5x6,3mm	Brass	Luchtkoker	Válvula	Valvola	Respiradouro
2	F 974	ø8,5x7,75mm	Brass	Luchtkoker	Válvula	Valvola	Respiradouro
1	F 1008	ø30mm	Brass	Schroet	Hélice	Elica	Hélice
1	F 1009	ø50mm	Brass	Schroet	Hélice	Elica	Hélice
1	TR 184			Transfer	Transfer	Decalcomanie	Decalcomania
1		200x50mm		Acetaat	Acetata	Acetato	Acetato
1		A4		Bauwbeschrijving	Instr. de constr.	Instruzioni di montaggio	Manual de montagem
1	50-50110	700x1000mm		Tekening 1	Ilustración 1	Piani di costruzione 1	Planta principal 1

Symboler = Farvenummer

= Colour No.

= Farben Nr.

Symboles = Couleur no.

= Kleur Nr.

= Color Nr.

Segno = Colore Nº

= Cõr nº

Til denne model er mahogni bejdse og farver med følgende numre nødvendige:
For this model is mahogany stain and colours with the following numbers should be used:
Für dieses Modell sind Mahagoni Beize und Farben mit den folgenden Nummern notwendig:
Pour ce modèle, le mordant et les couleurs avec les numéros suivants doivent être employées:
Voor dit model zijn kleuren met de volgende nummers nodig:
Para est modelo se necesitan mordiente et colores con los siguientes nùmeros:
Per questo modello occorrono inchiostro tinteggiatore ”mogano” e colori con questi numeri:
Pinte o modelo com tintura cõr Mogno e as cõres sugeridas da Billing Boats:

Billing 3 = Emarald
Billing 4 = Orange
Billing 5 = Tan
Billing 6 = Hull Red
Billing 9 = Bright red
Billing 10 = Matt Lemon
Billing 14 = Matt White
Billing 17 = Clear Poly
Billing 22 = Matt Black
Billing 30 = Dark Ad Grey
Billing 36 = Bejdse/Stain/Beize/Mordant/Beize/Mordient

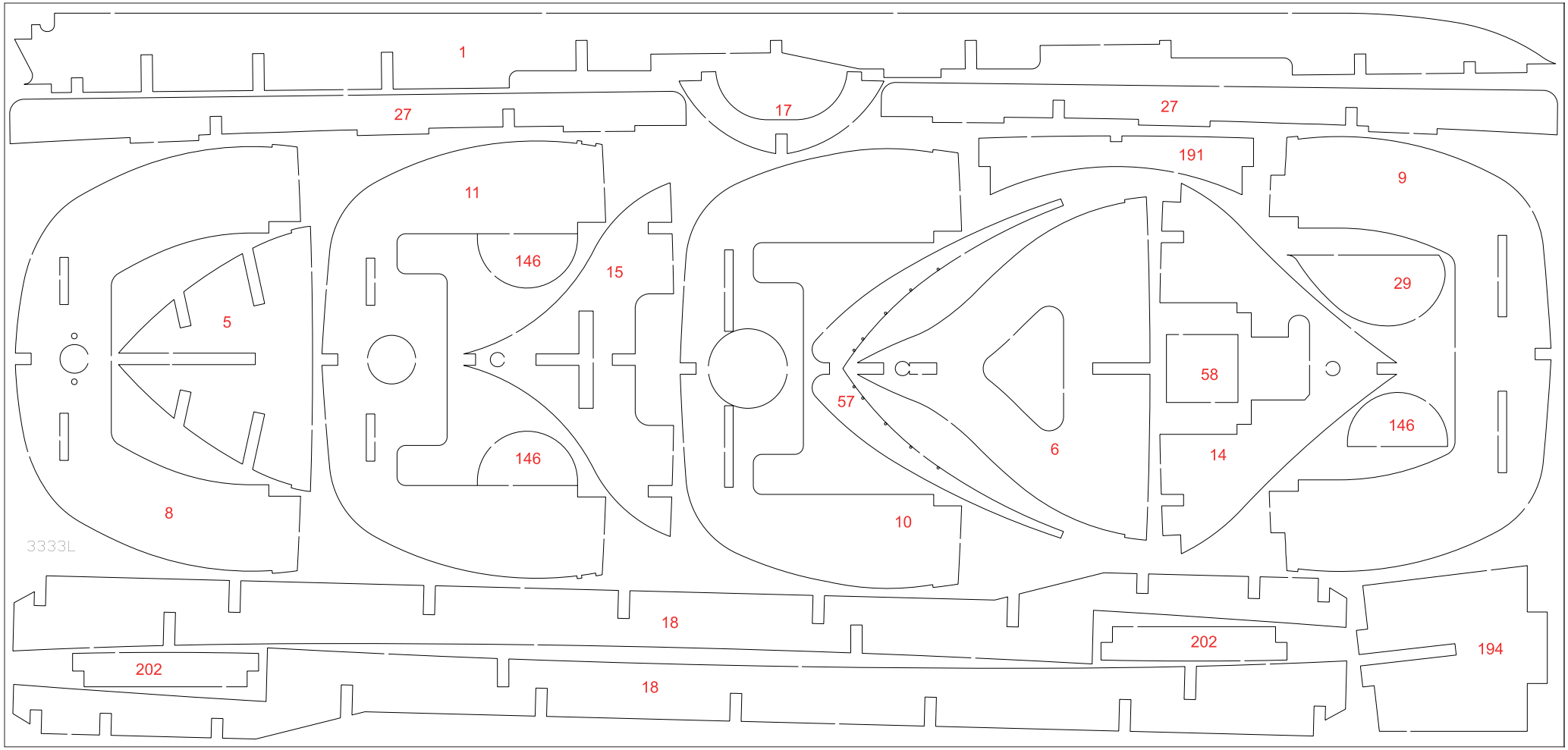
1
27
17
27
191
9
11
146
15
29
5
58
57
146
6
14
146
8
10
3333L
18
202
194
202
18

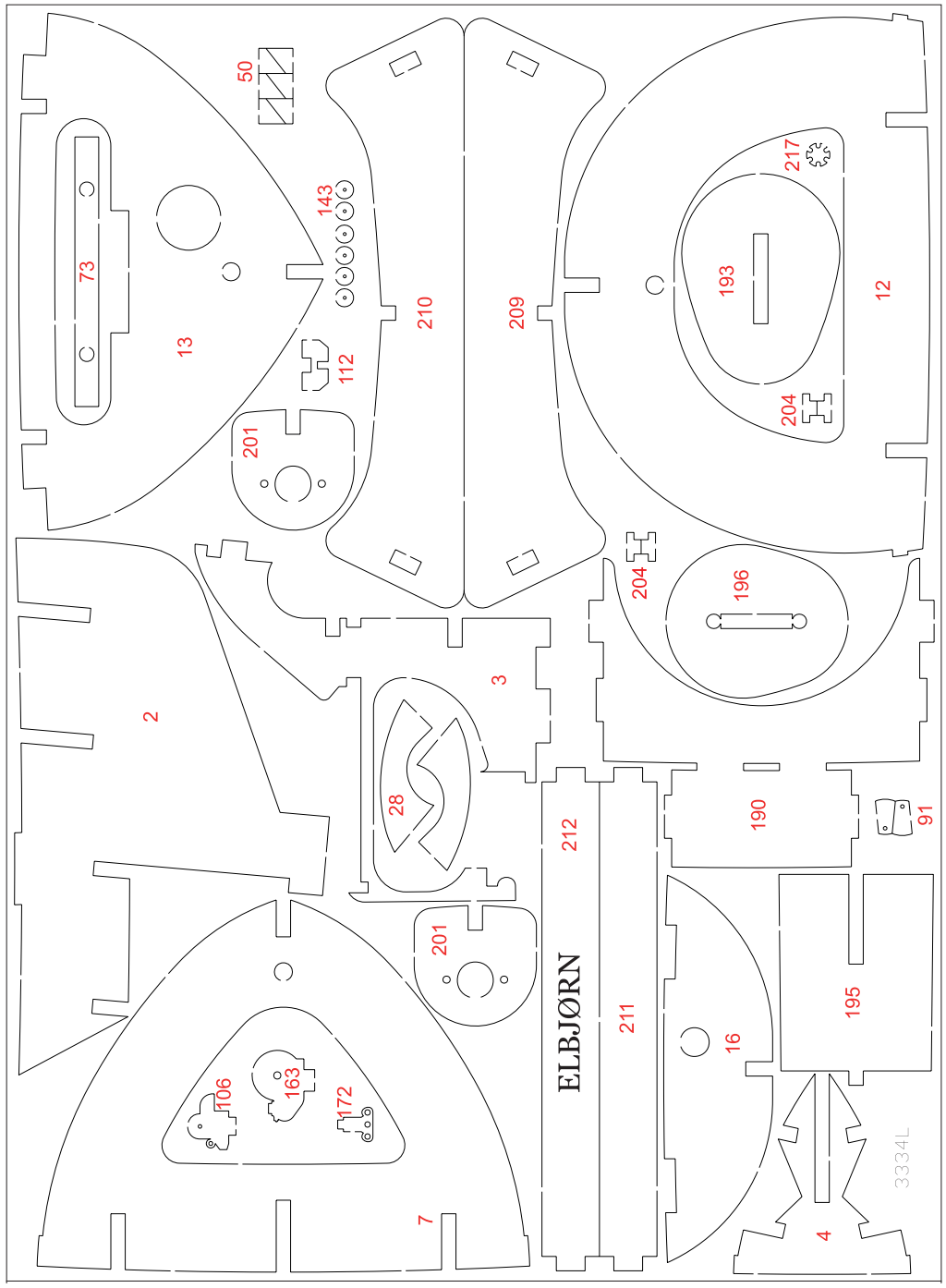
ELBJØRN
3334L
2
3
4
7
13
12
16
21
28
50
73
91
106
112
143
158
163
172
190
192
193
195
196
200
201
204
209
210
211
212
217

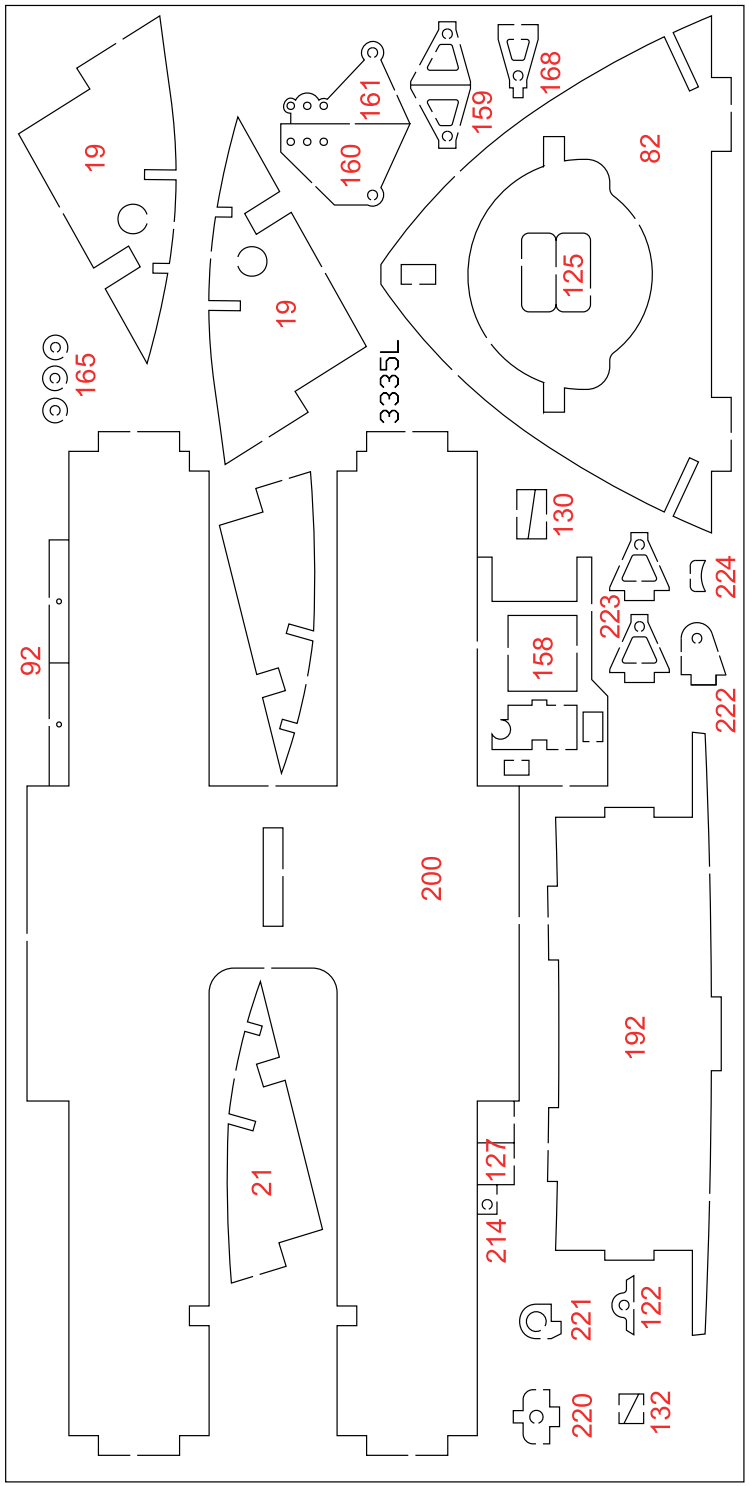
3335L
19
82
92
125
127
130
158
159
160
161
165
168
192
200
214
220
221
222
223
224

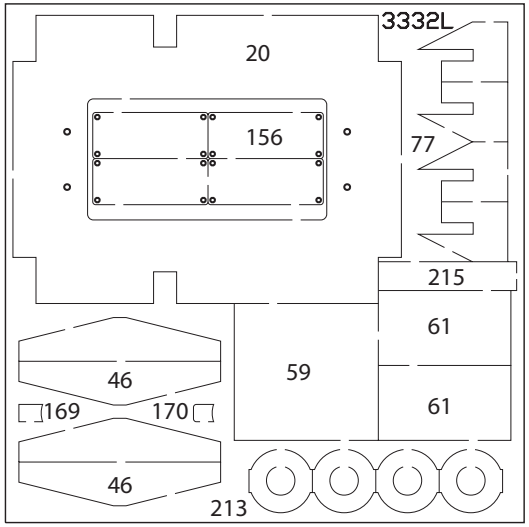
3332L
20
156
77
215
61
59
61
46
169
170
46
213

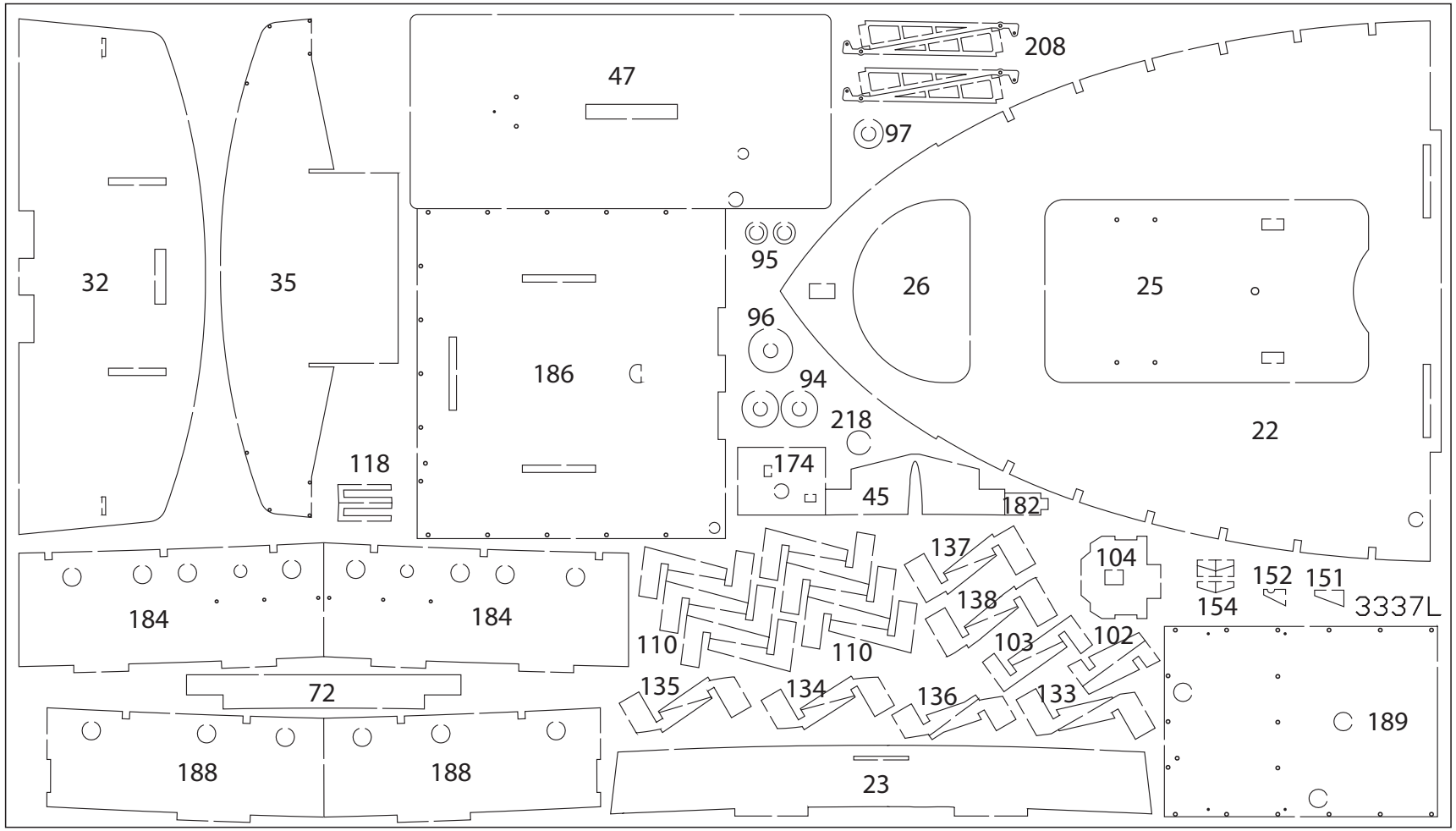
47
208
97
32
35
95
26
25
96
186
94
218
22
118
174
45
182
137
104
152
151
154
3337L
138
184
184
110
110
103
102
135
134
136
133
72
189
188
188
23

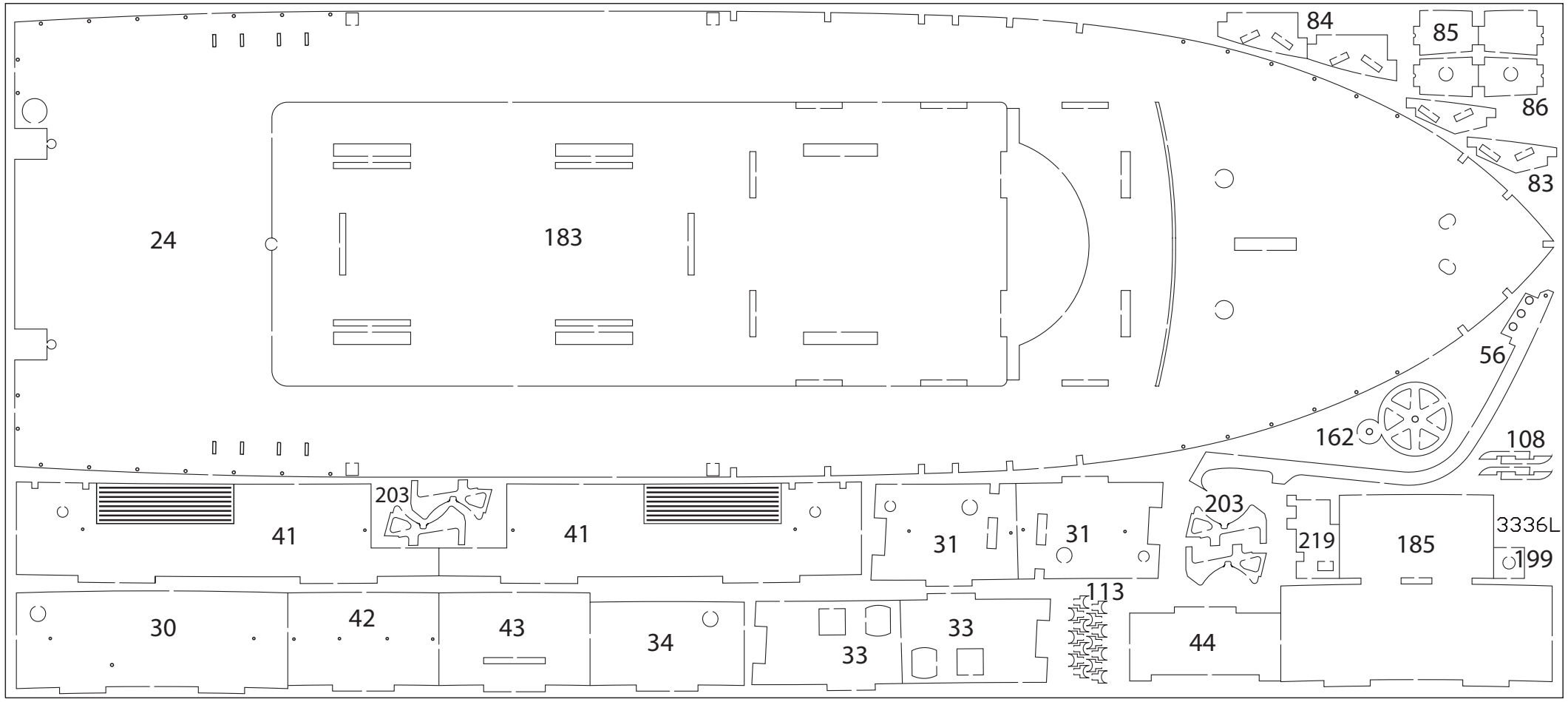
84
85
86
83
24
183
56
162
108
203
41
41
203
31
31
219
185
3336L
199
113
30
42
43
34
33
33
44

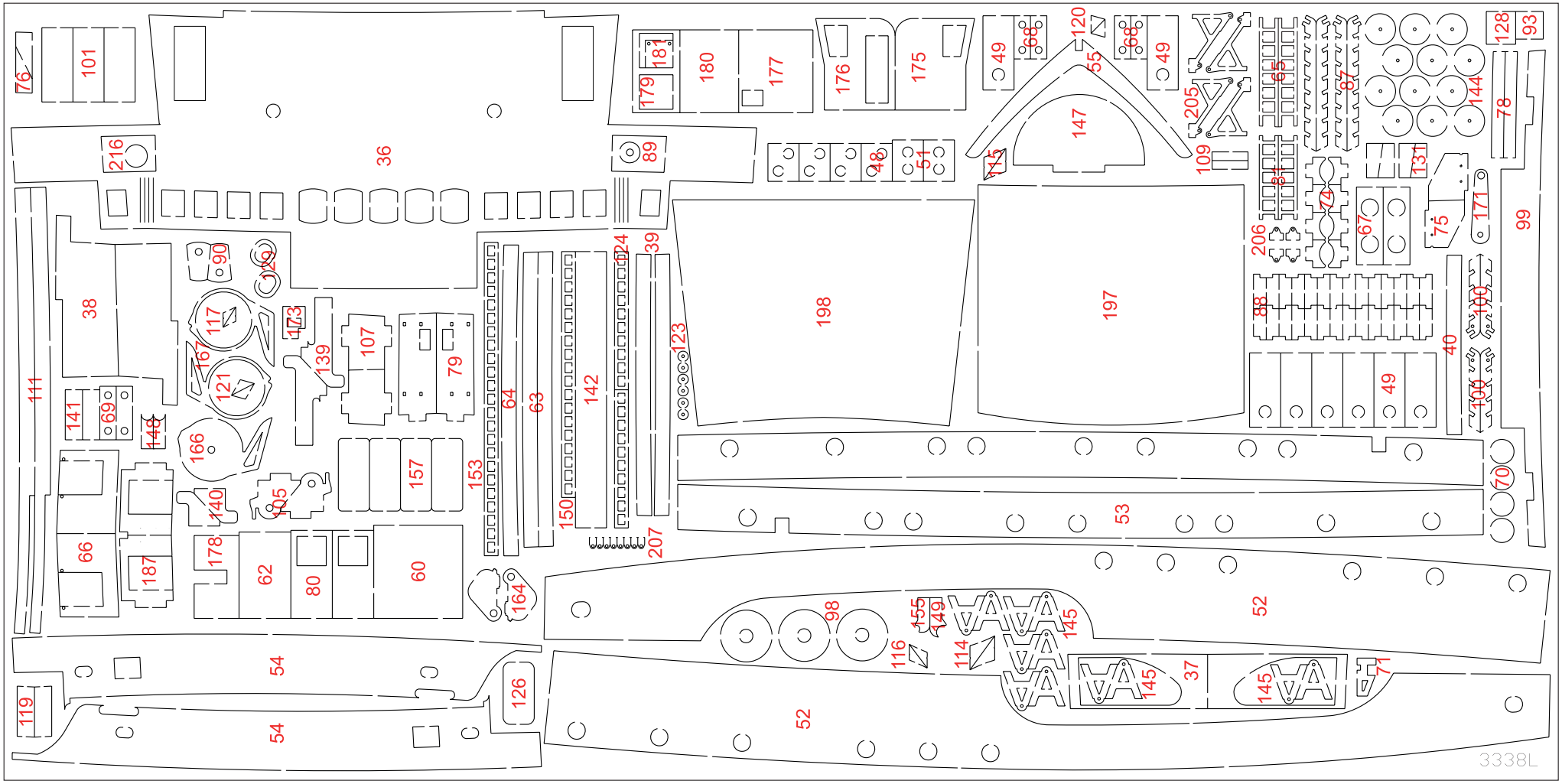
3338L

FIG. 1

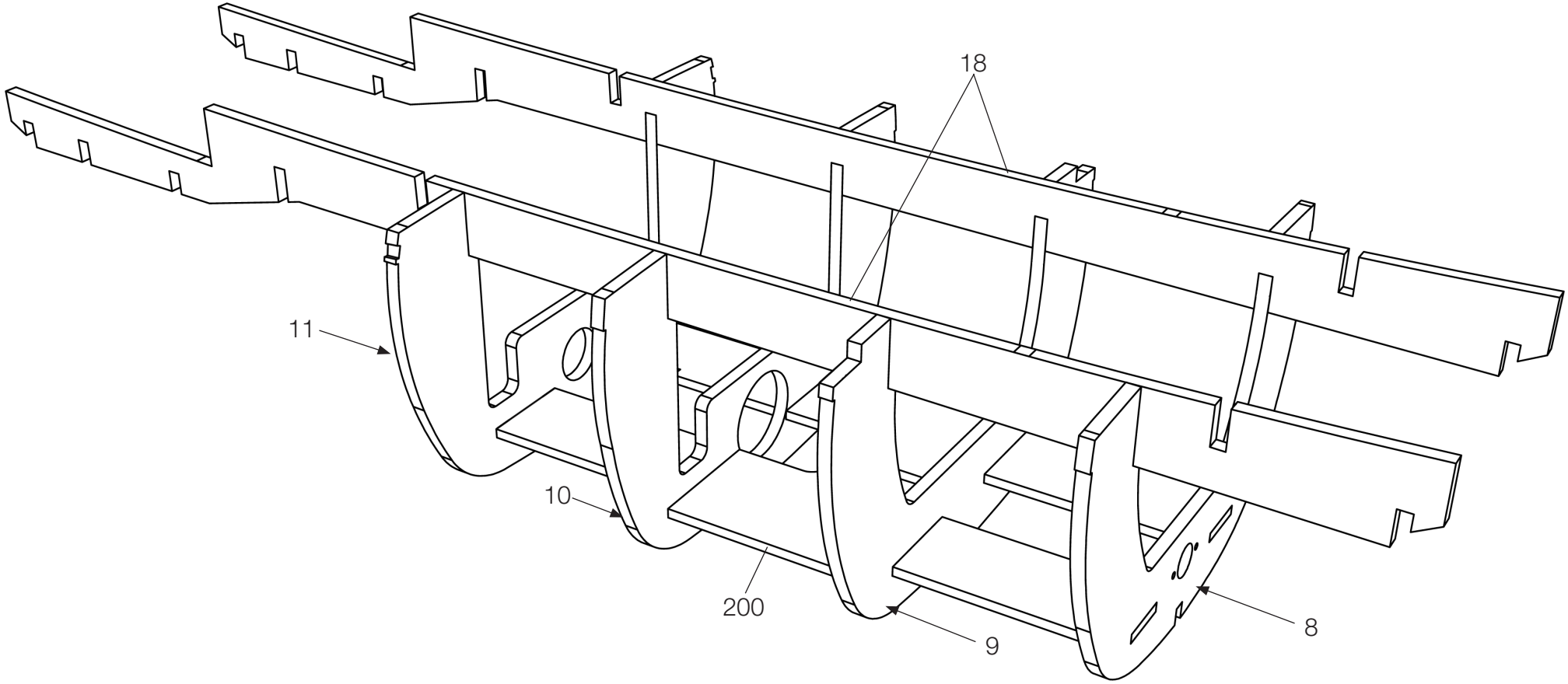

FIG. 2

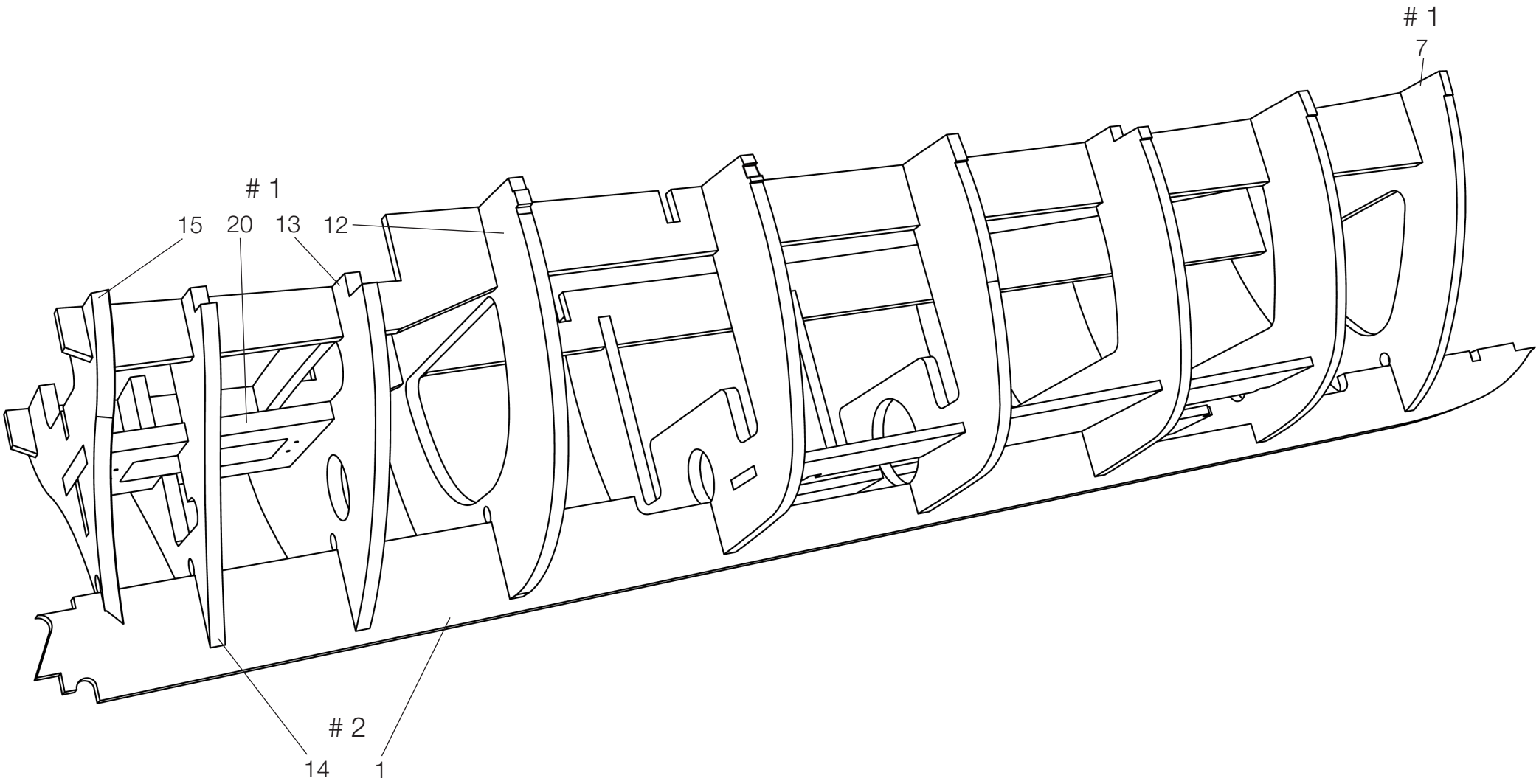

FIG. 3

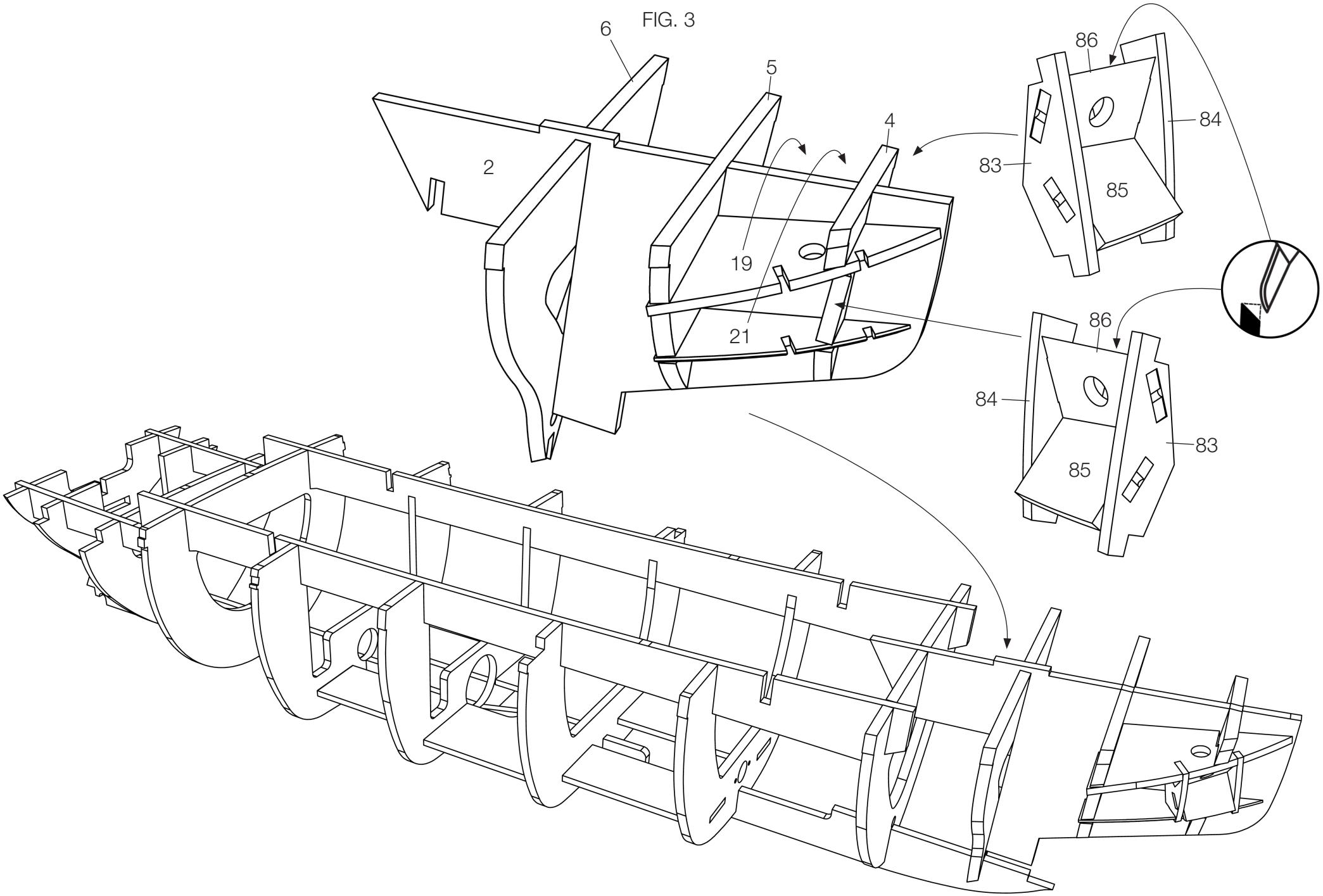

FIG. 4

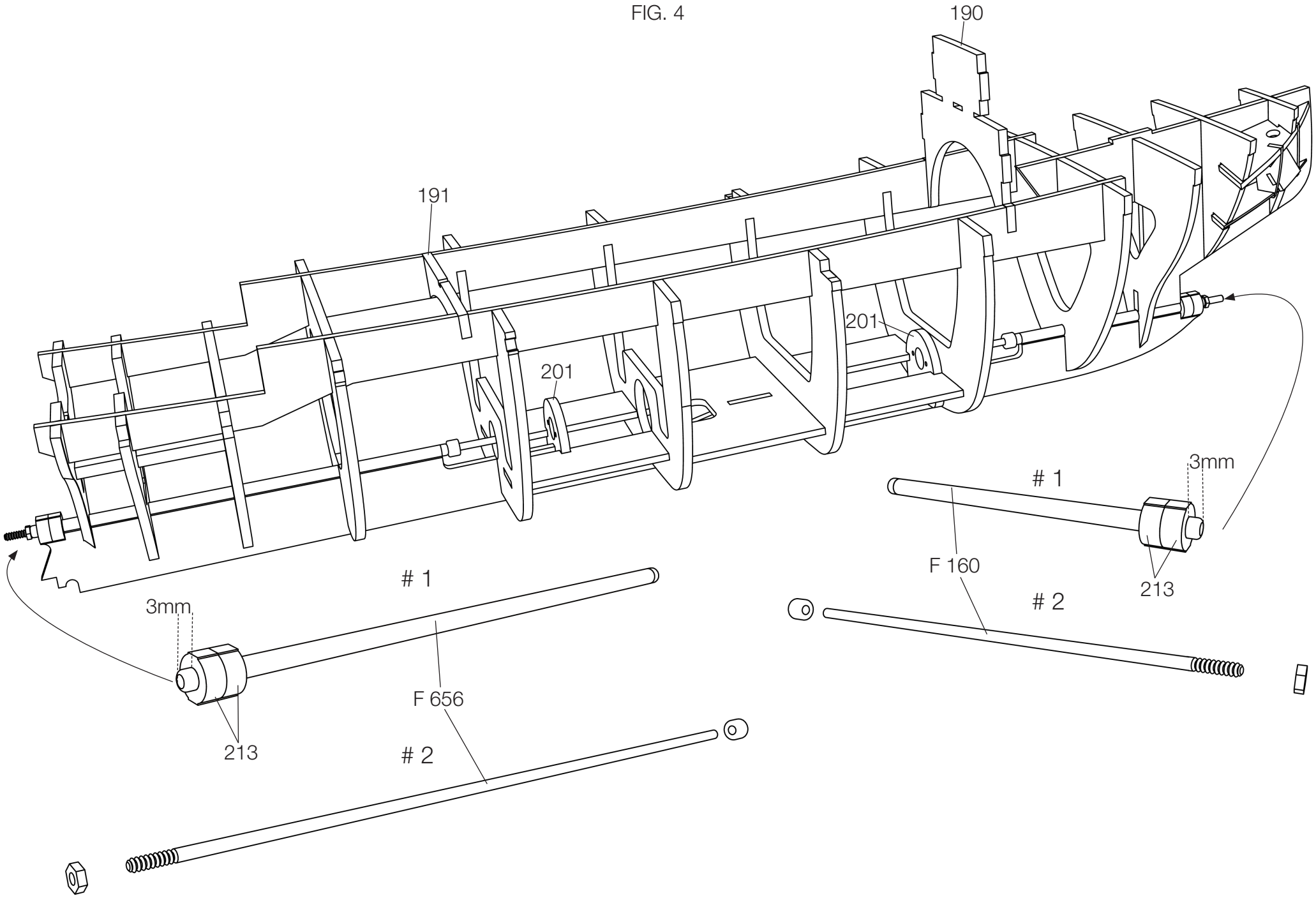

FIG. 5

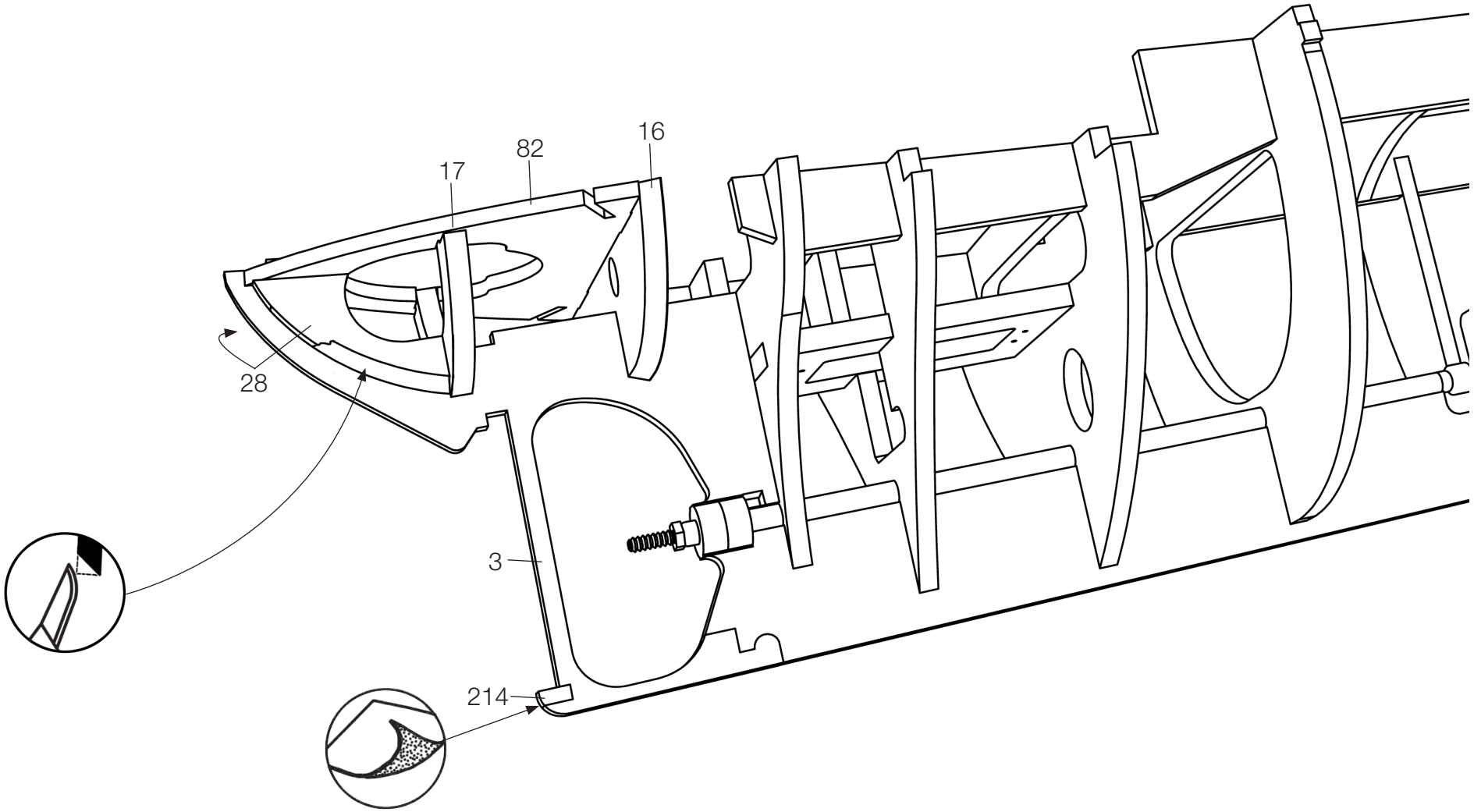

FIG. 6

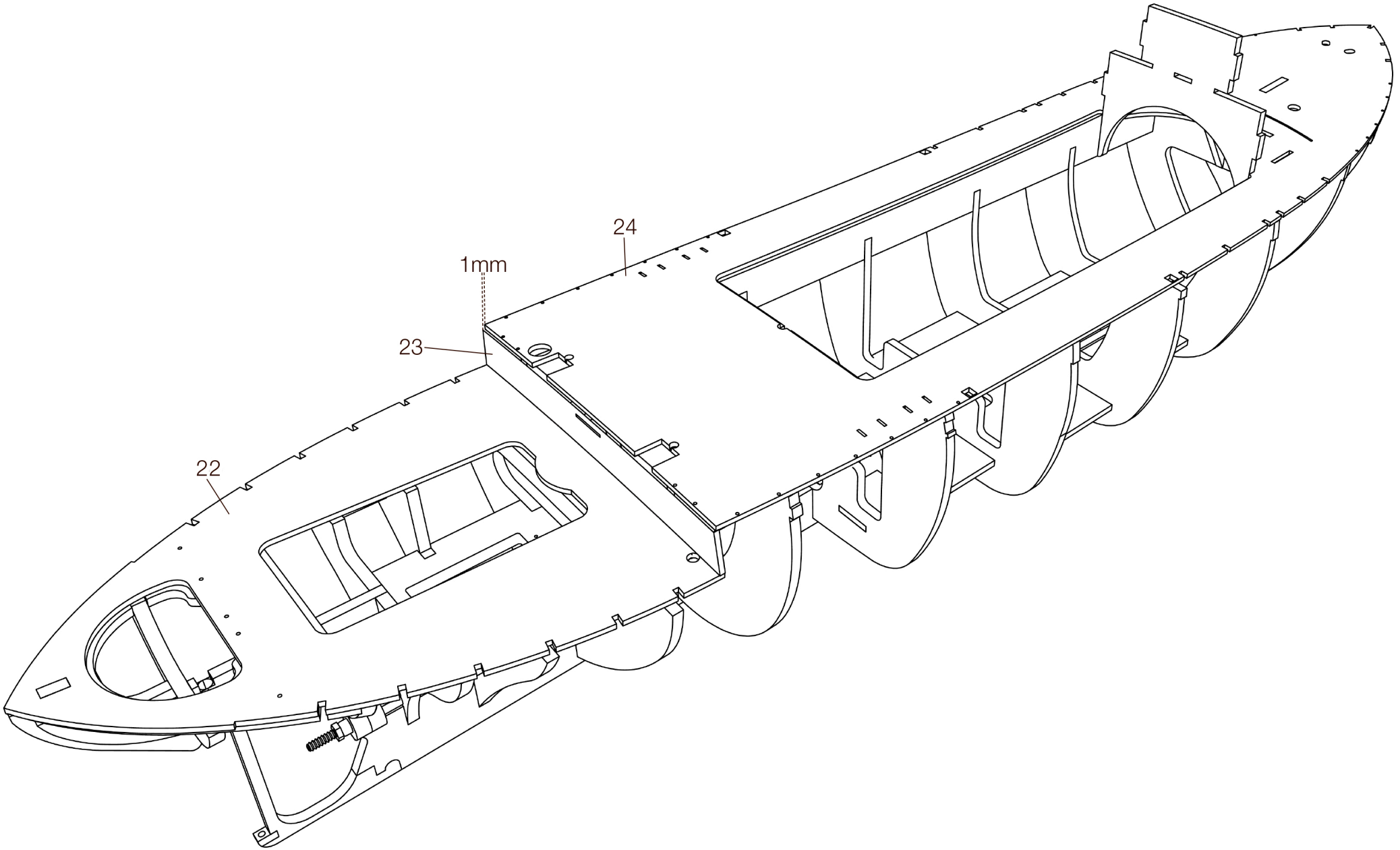

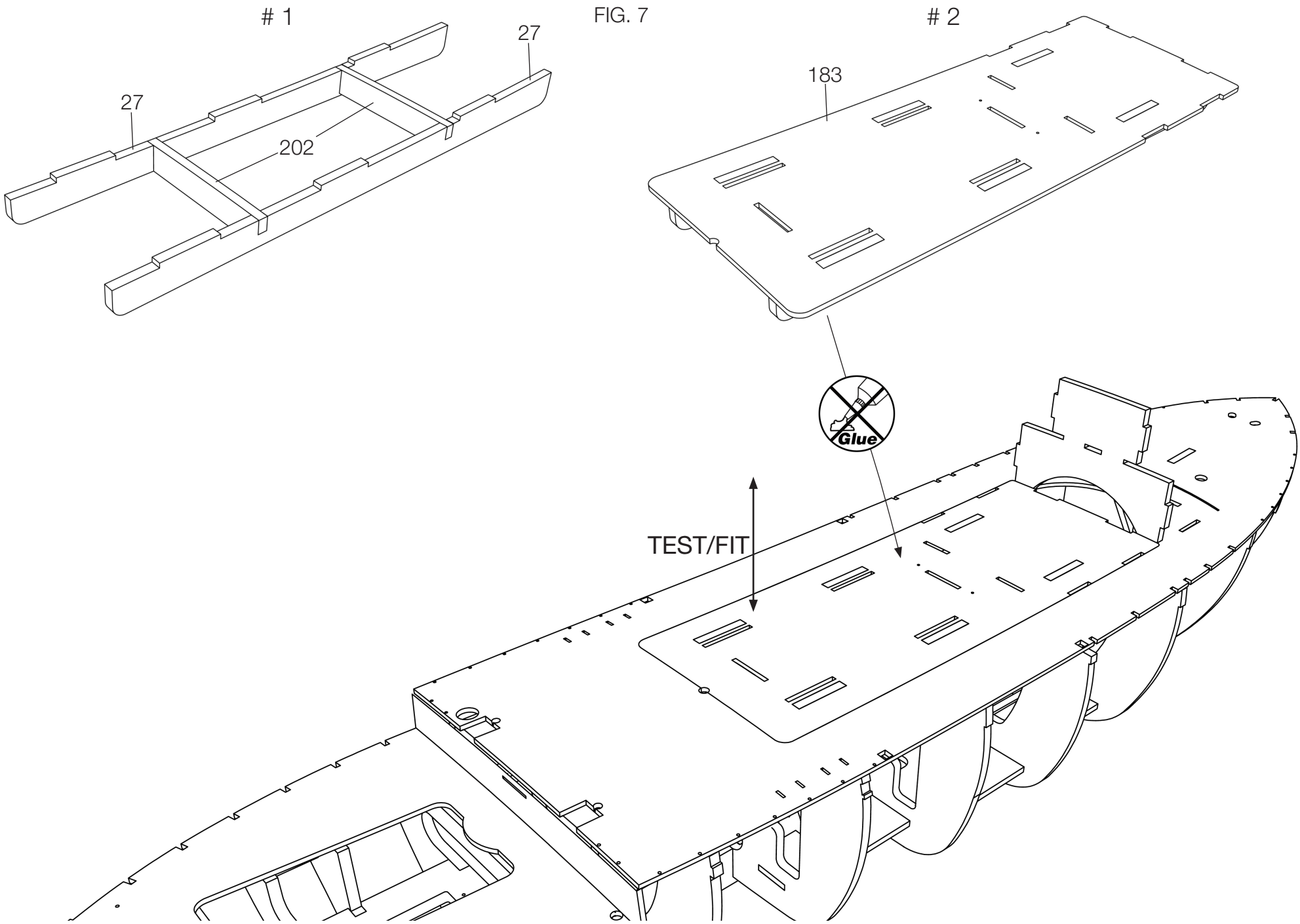
1
27
27
202
FIG. 7
2
183
Glue
TEST/FIT

FIG. 8

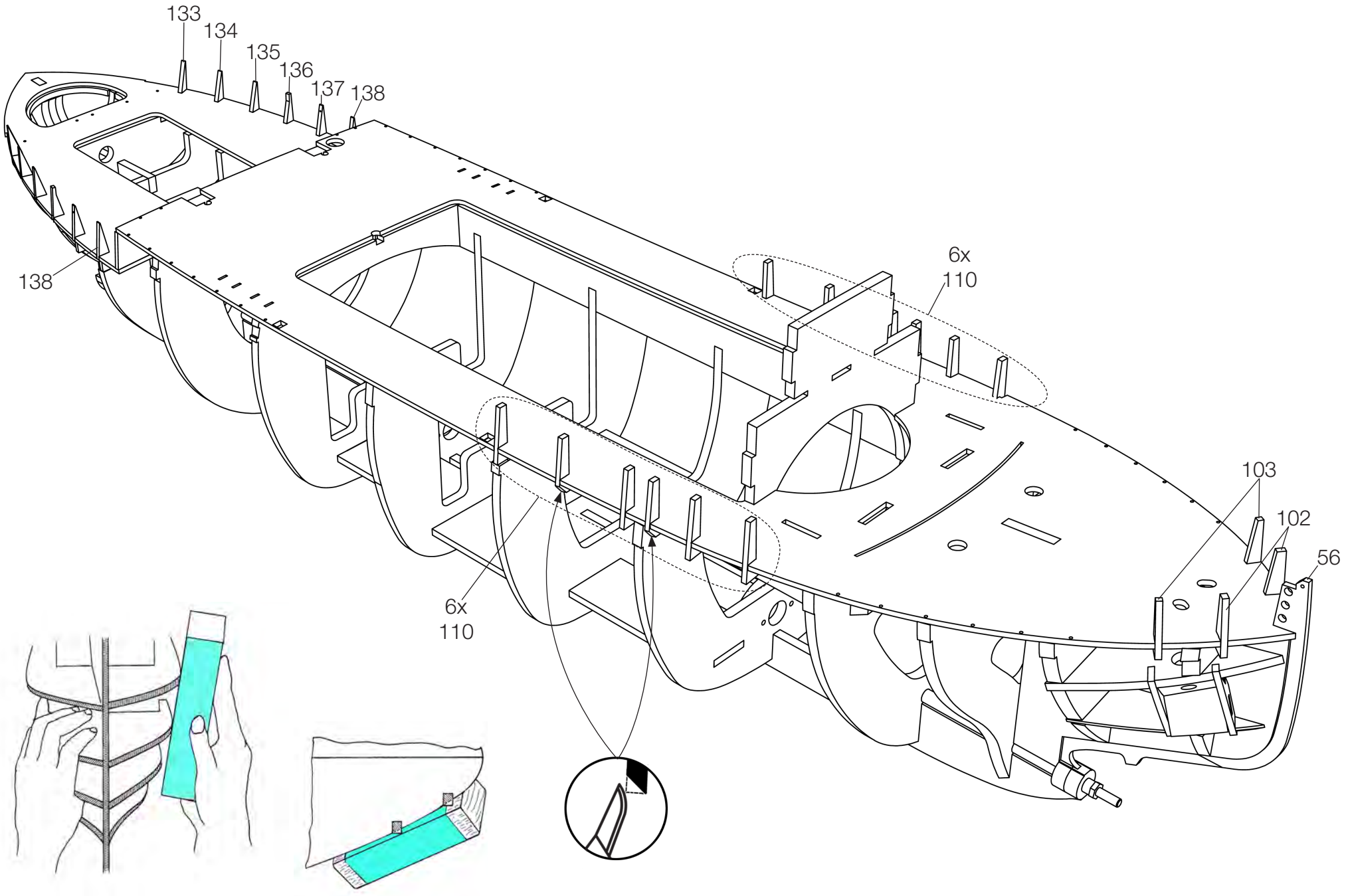

FIG. 9

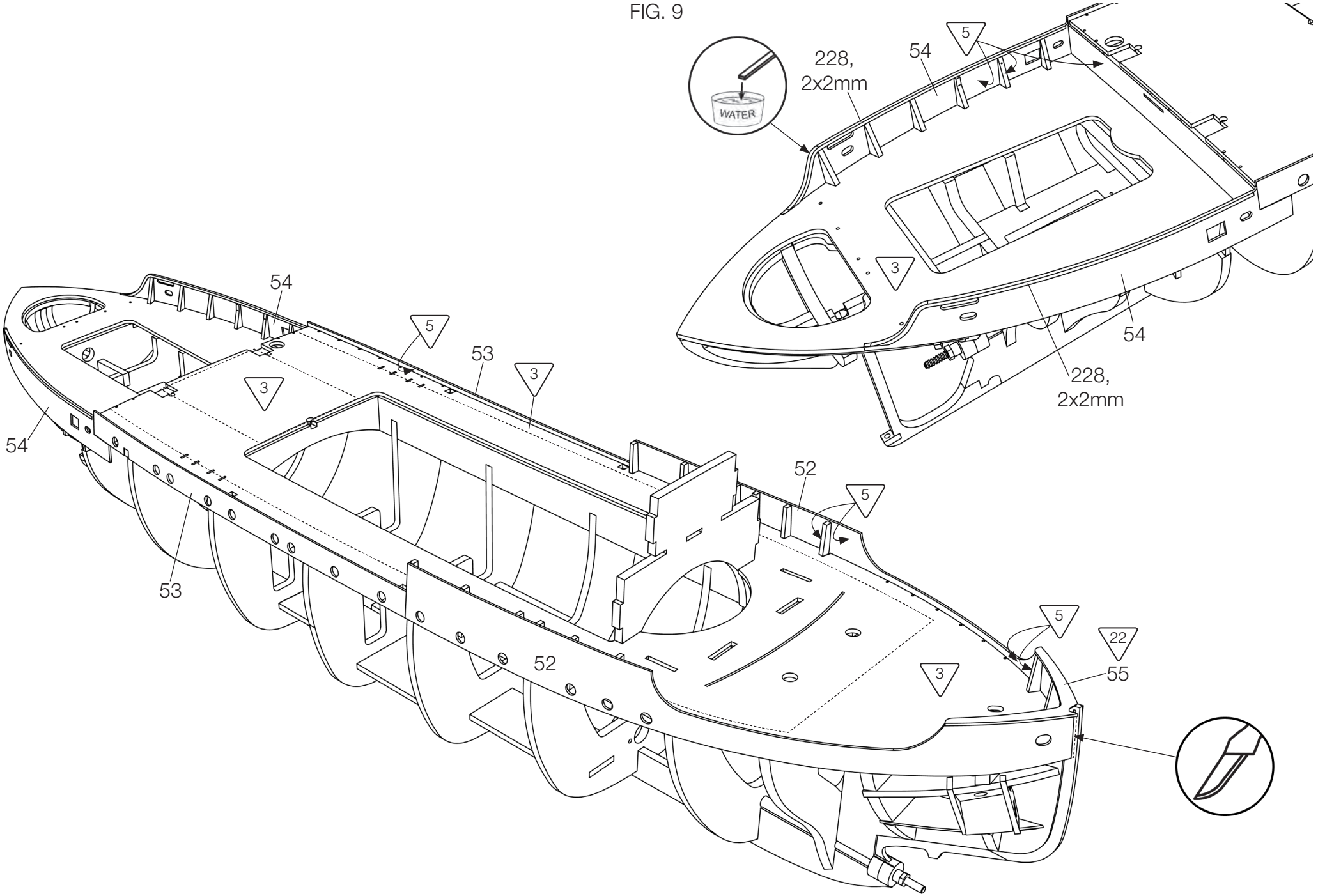

FIG. 10

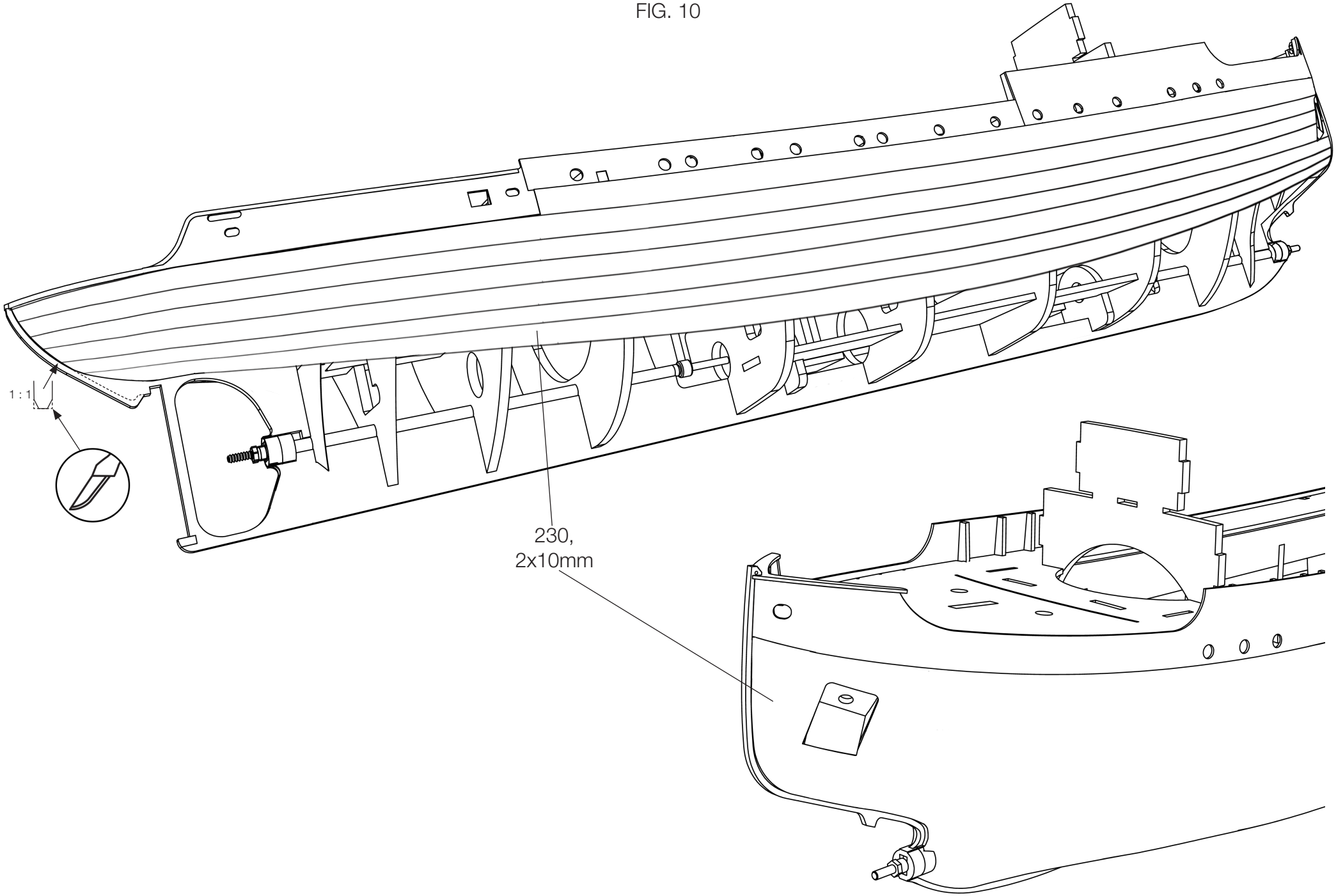

FIG. 11

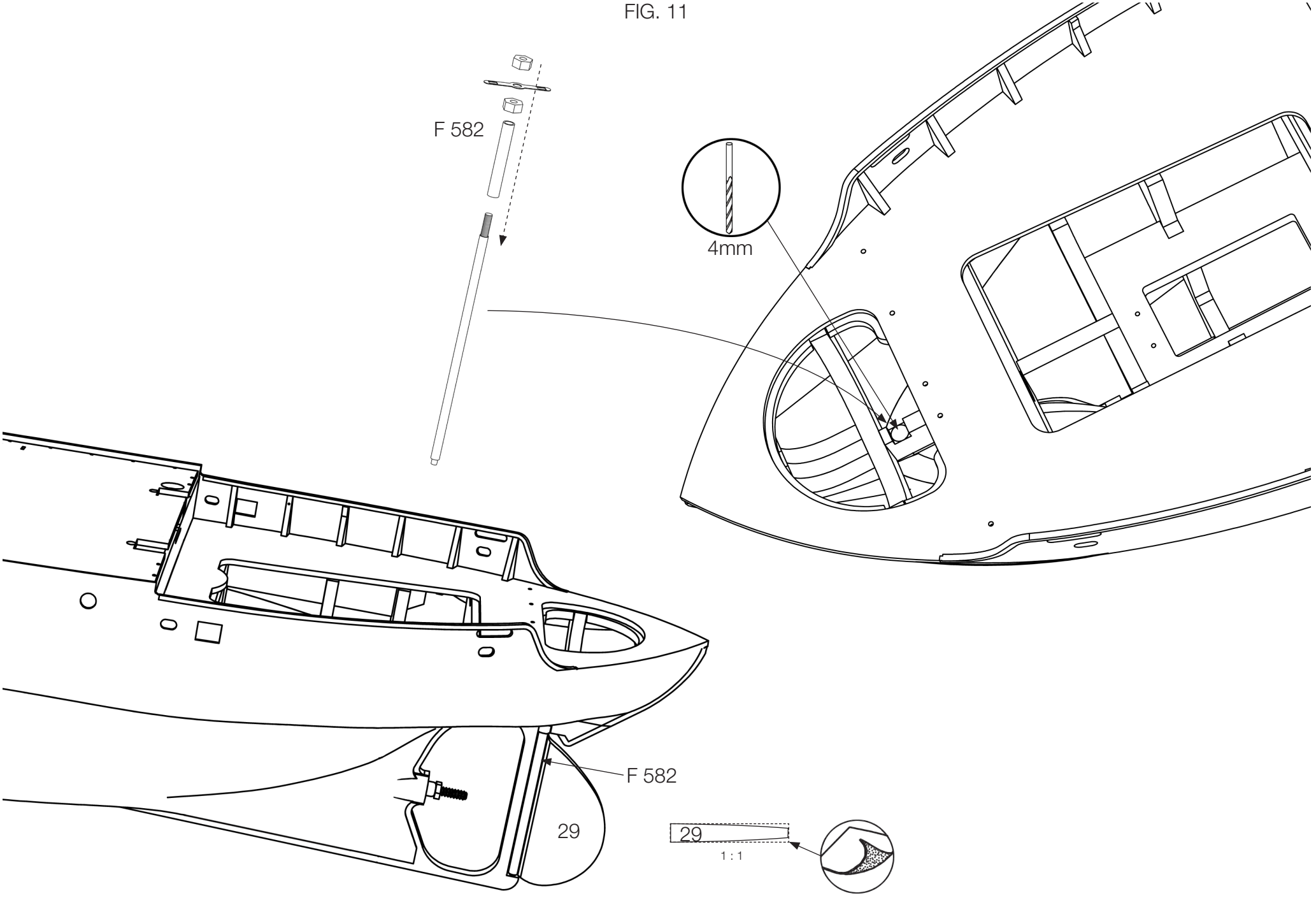

FIG. 12

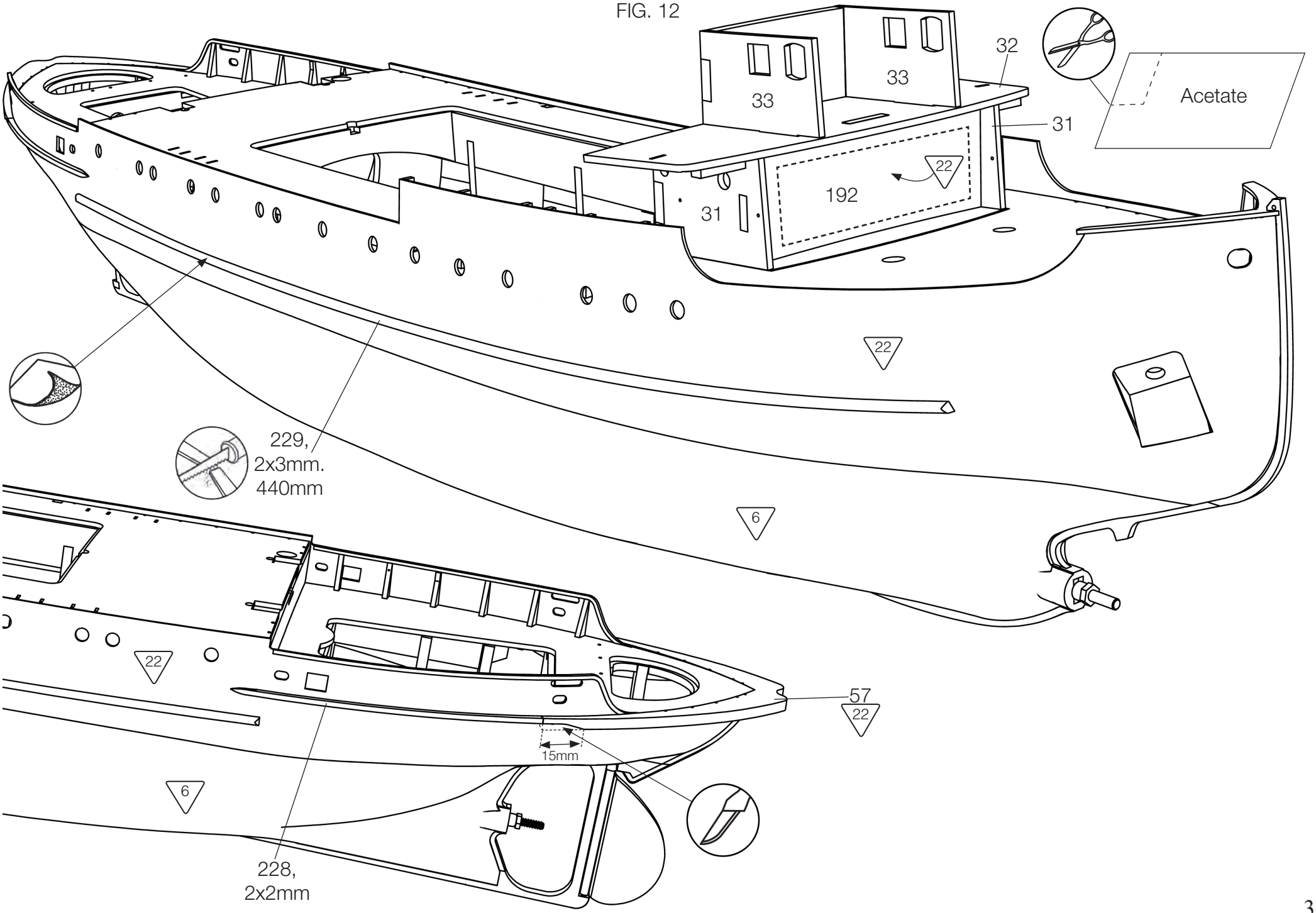
32
33
33
Acetate
31
192
22
31
22
229,
2x3mm.
440mm
6
22
57
22
15mm
6
228,
2x2mm

FIG. 13

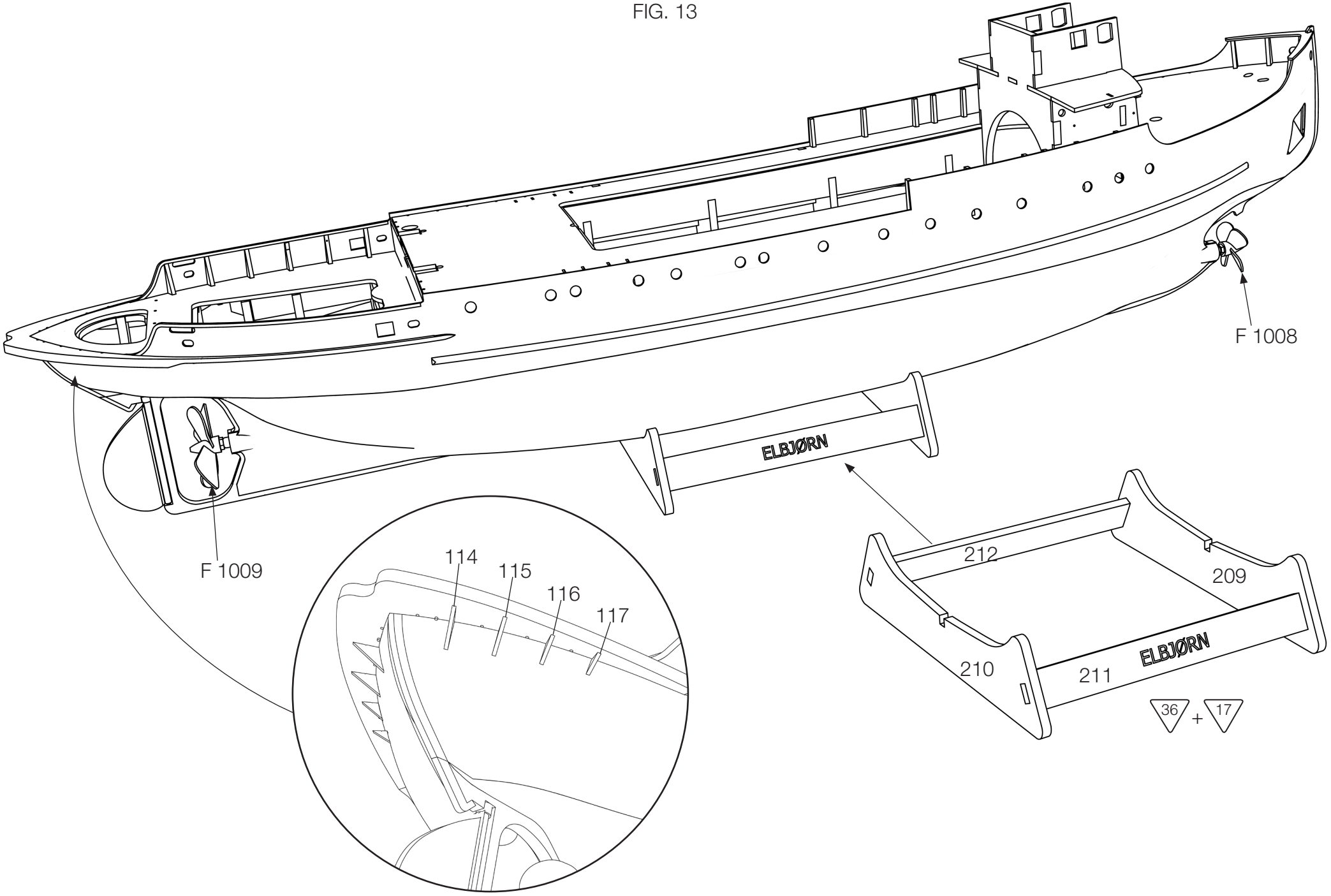
F 1008
F 1009
ELBJØRN
114
115
116
117
212
209
210
211
ELBJØRN
36
17

FIG. 14

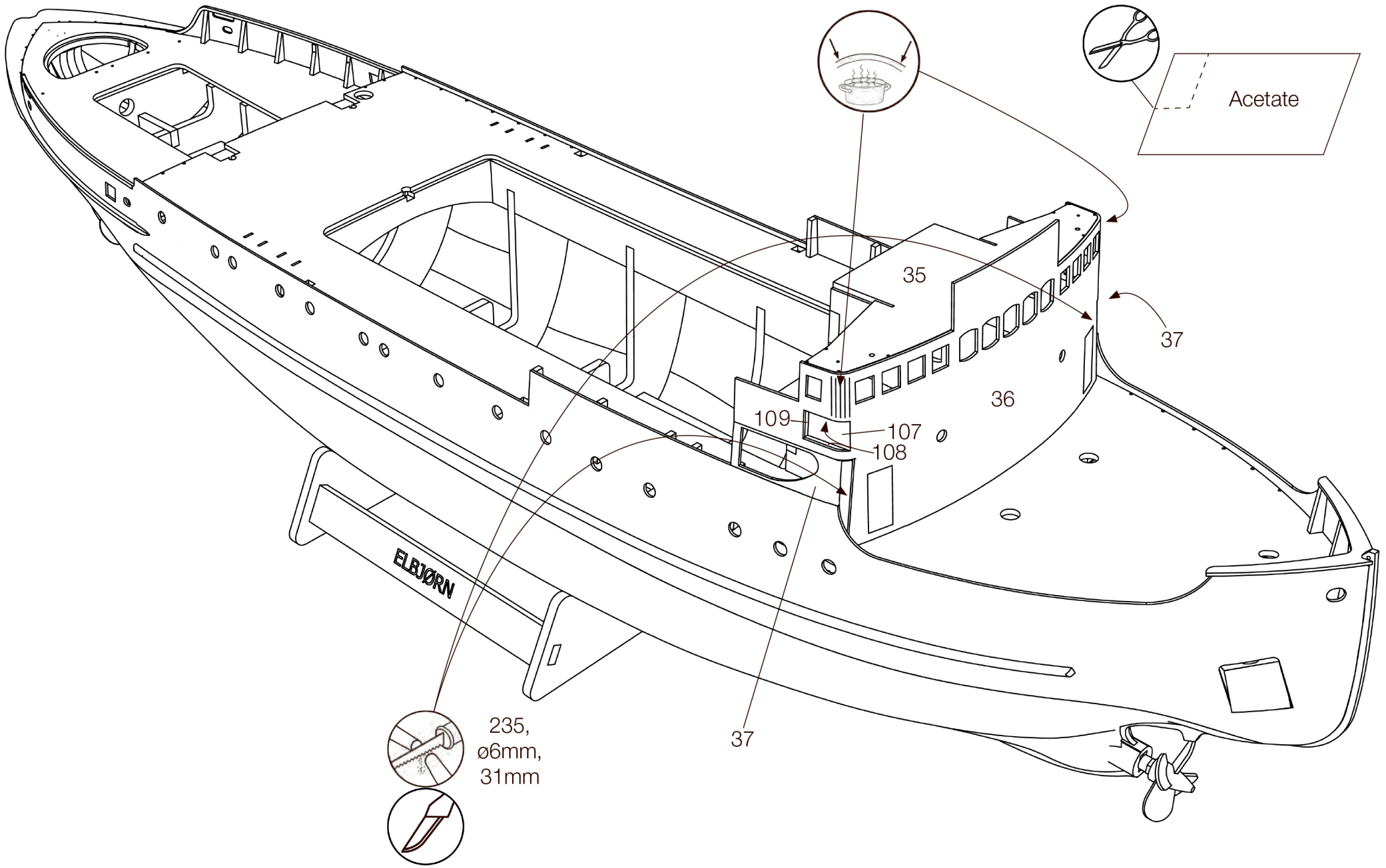

FIG. 15

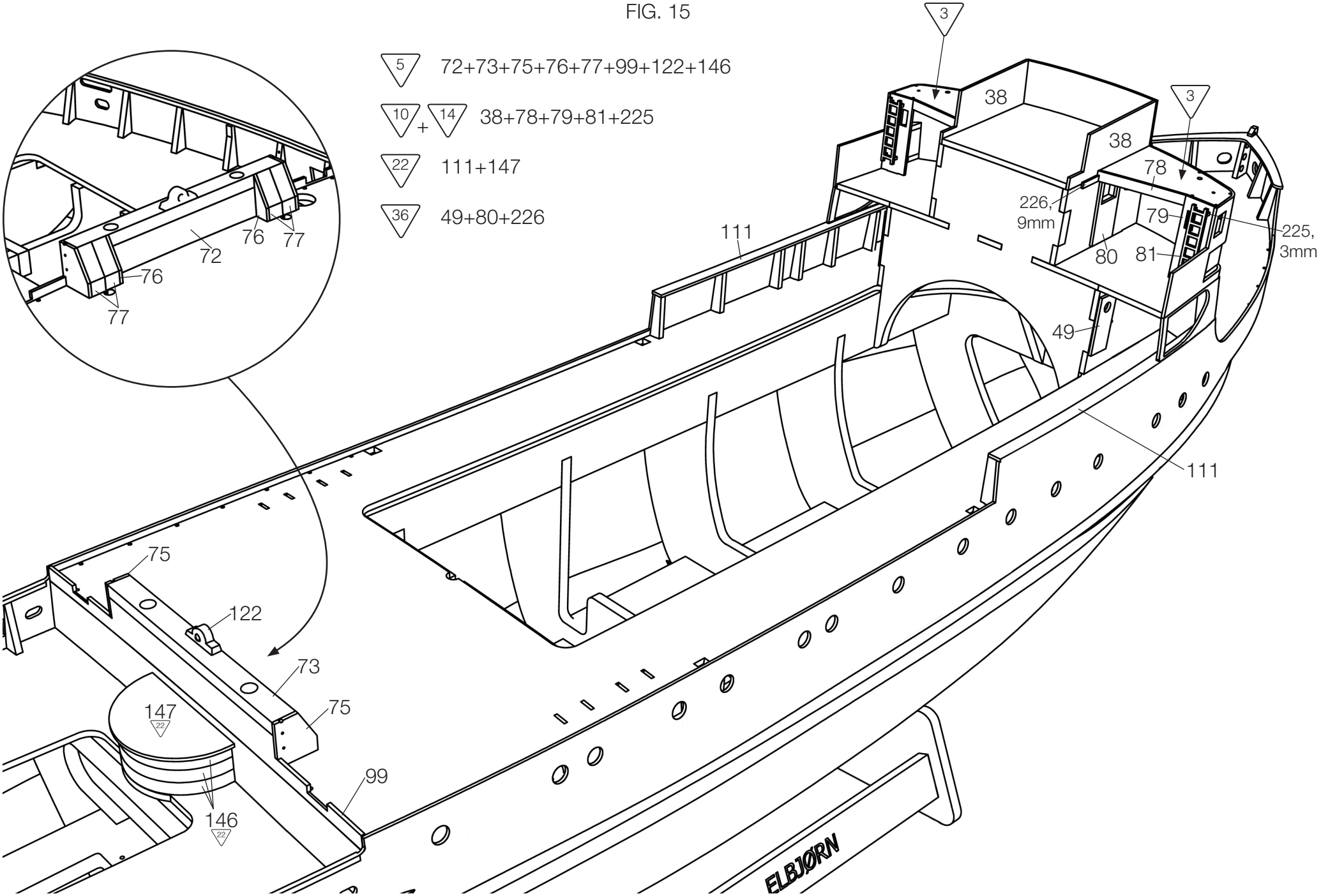
5 72+73+75+76+77+99+122+146
10 + 14 38+78+79+81+225
22 111+147
36 49+80+226
3
38
38
3
78
226, 9mm
79
225, 3mm
80
81
111
49
111
72
76
77
76
77
75
122
73
75
147
22
99
146
22
ELBJØRN

FIG. 16

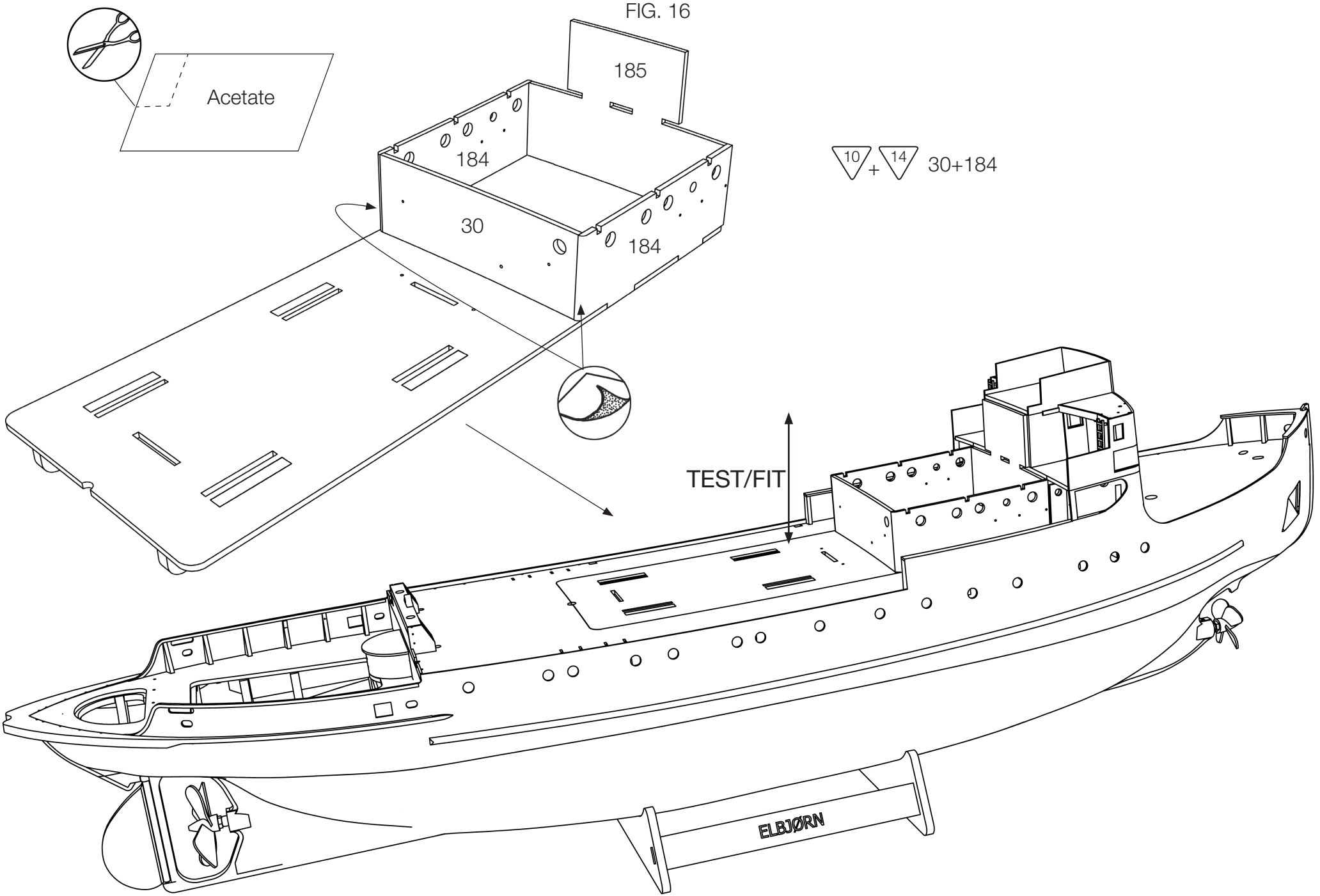

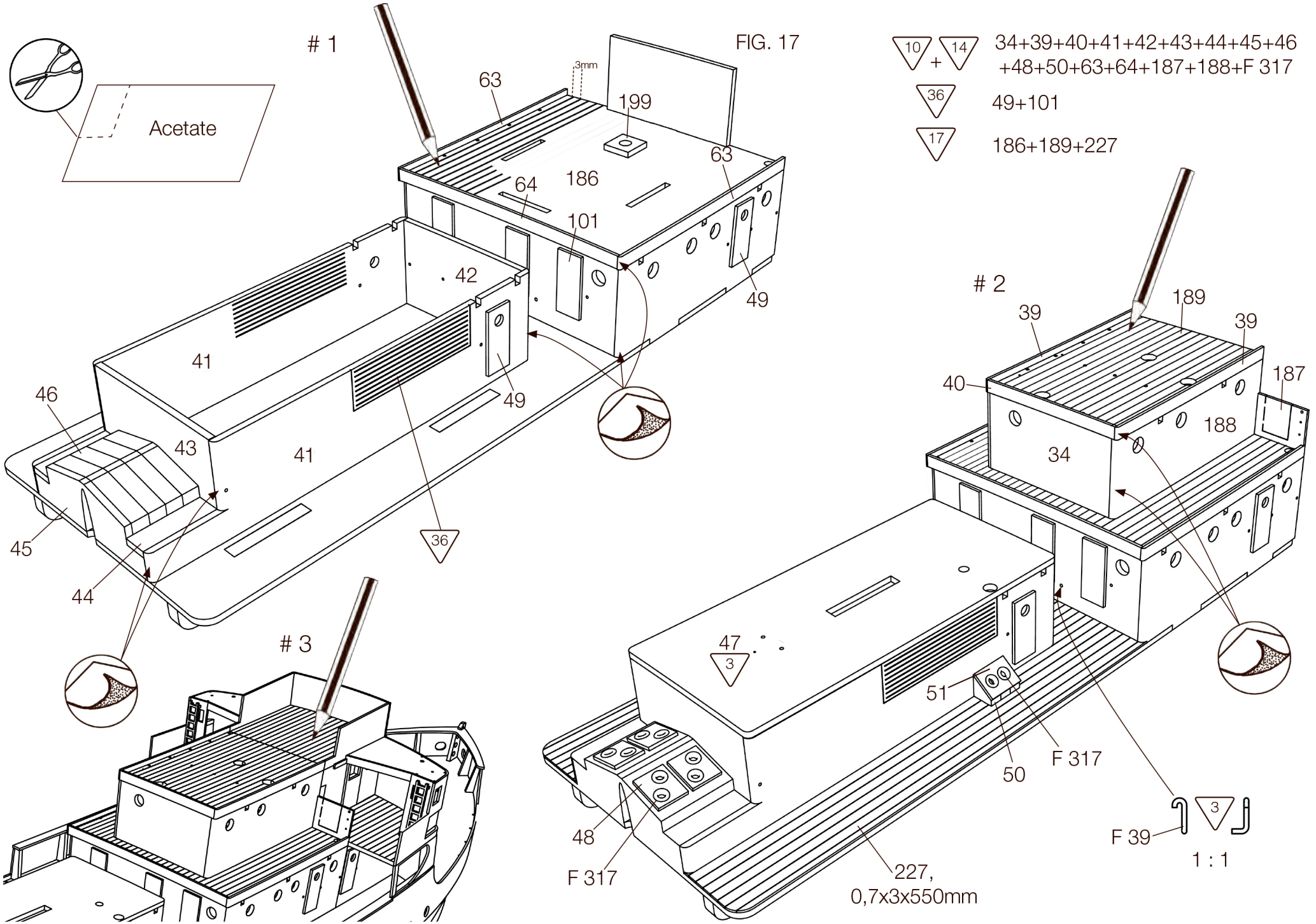
FIG. 17
10 + 14 34+39+40+41+42+43+44+45+46 +48+50+63+64+187+188+F 317
36 49+101
17 186+189+227
Acetate
1
63
3mm
199
63
64
186
101
42
49
41
46
43
41
49
45
36
44
2
189
39
39
40
187
188
34
47
3
51
50
F 317
48
F 317
227, 0,7x3x550mm
3
F 39
1 : 1
3

FIG. 18

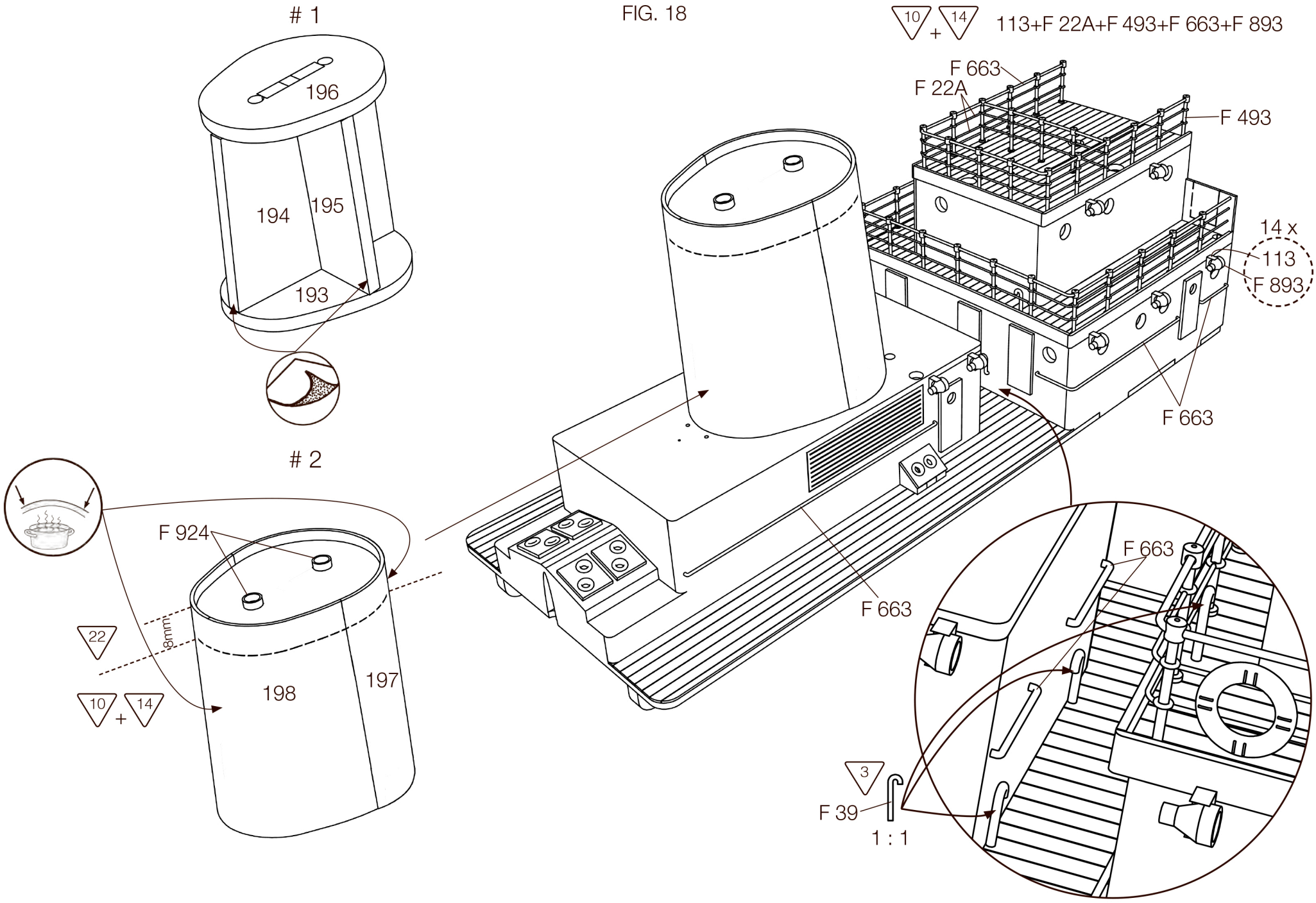
1
196
194
195
193
2
F 924
22
8mm
198
197
10 + 14
10 + 14 113+F 22A+F 493+F 663+F 893
F 663
F 22A
F 493
14 x
113
F 893
F 663
F 663
F 663
3
F 39
1 : 1

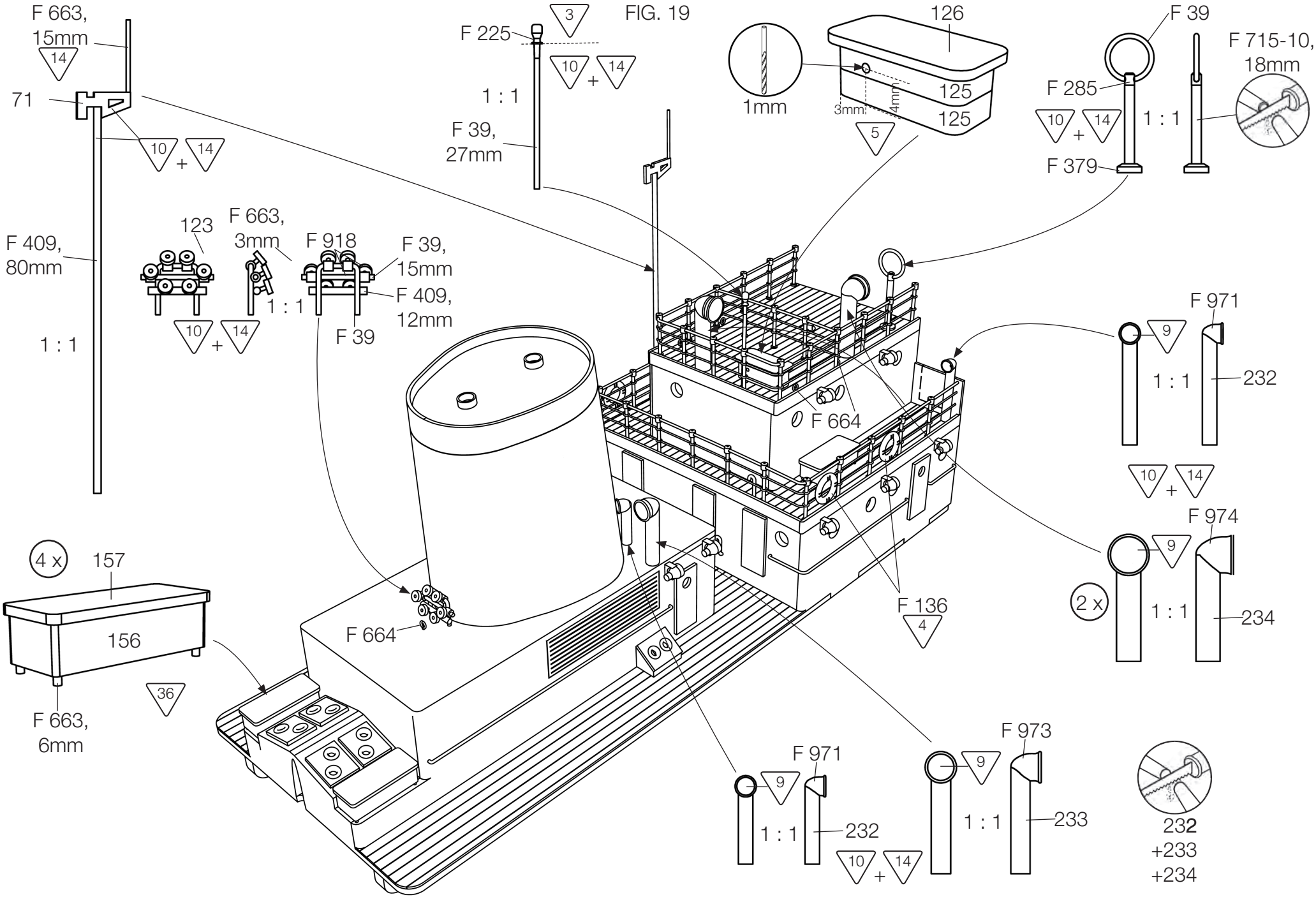
FIG. 19
F 663, 15mm
14
71
10 + 14
1 : 1
F 409, 80mm
1 : 1
123
F 663, 3mm
F 918
F 39, 15mm
F 409, 12mm
1 : 1
10 + 14
F 39
F 225
3
10 + 14
1 : 1
F 39, 27mm
1mm
126
125
125
3mm
4mm
5
F 285
F 39
F 715-10, 18mm
10 + 14
1 : 1
F 379
F 664
F 664
F 136
4
F 971
9
1 : 1
232
10 + 14
F 974
9
2 x
1 : 1
234
4 x
157
156
36
F 663, 6mm
F 971
9
1 : 1
232
10 + 14
F 973
9
1 : 1
233
232
+233
+234

FIG. 20

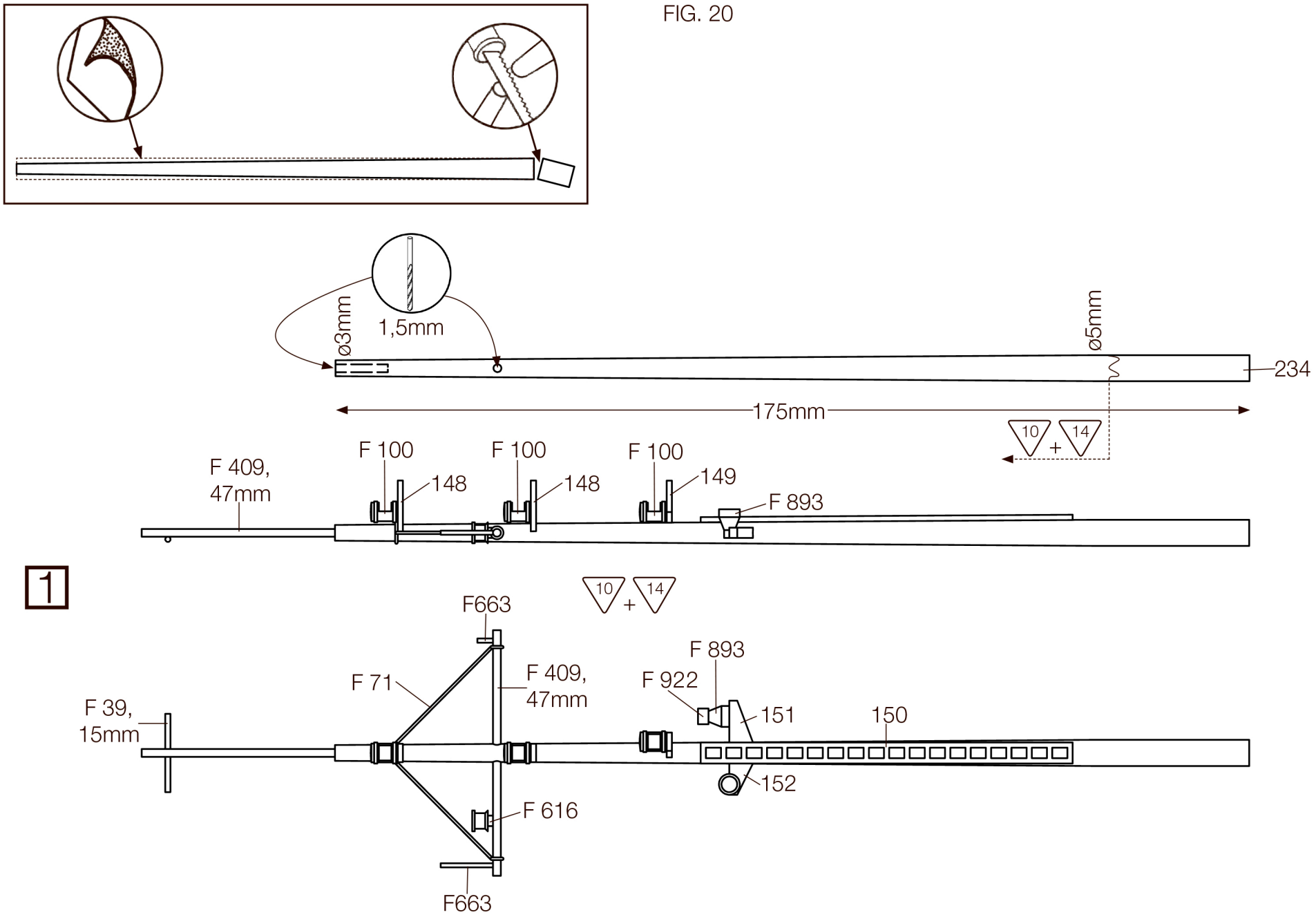
ø3mm
1,5mm
ø5mm
234
175mm
10
+
14
F 409,
47mm
F 100
148
F 100
148
F 100
149
F 893
1
10
+
14
F663
F 71
F 409,
47mm
F 893
F 922
151
150
F 39,
15mm
152
F 616
F663

FIG. 21

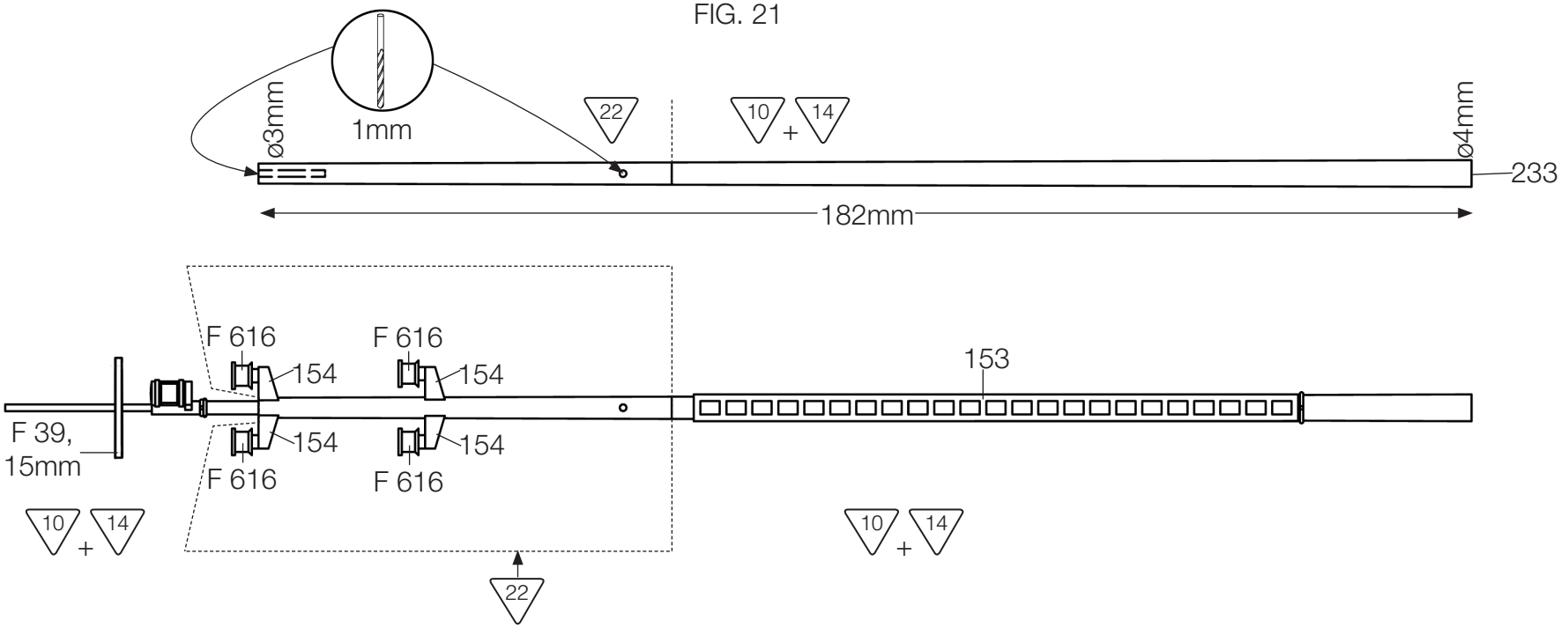
ø3mm
1mm
22
10
+
14
ø4mm
233
182mm
F 616
154
F 616
154
153
F 39,
15mm
154
154
F 616
F 616
10
+
14
10
+
14
22

2

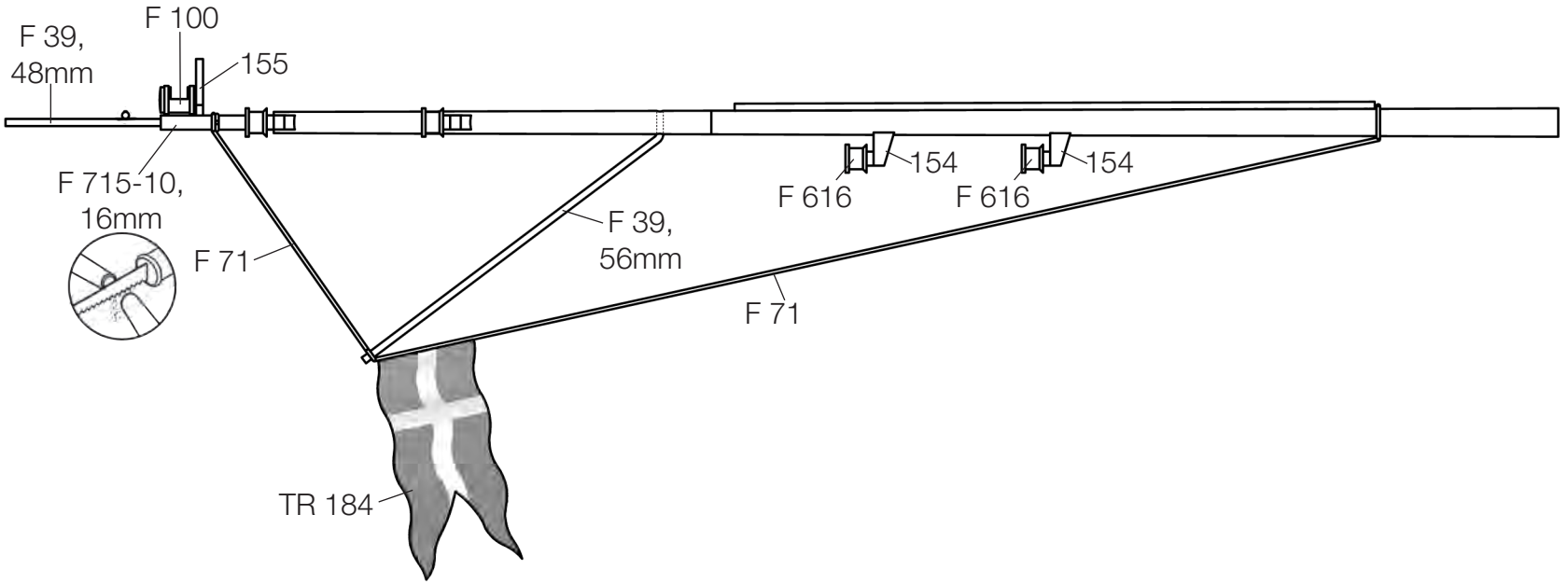
F 39,
48mm
F 100
155
F 715-10,
16mm
F 71
F 39,
56mm
F 616
154
F 616
154
F 71
TR 184

FIG. 21A

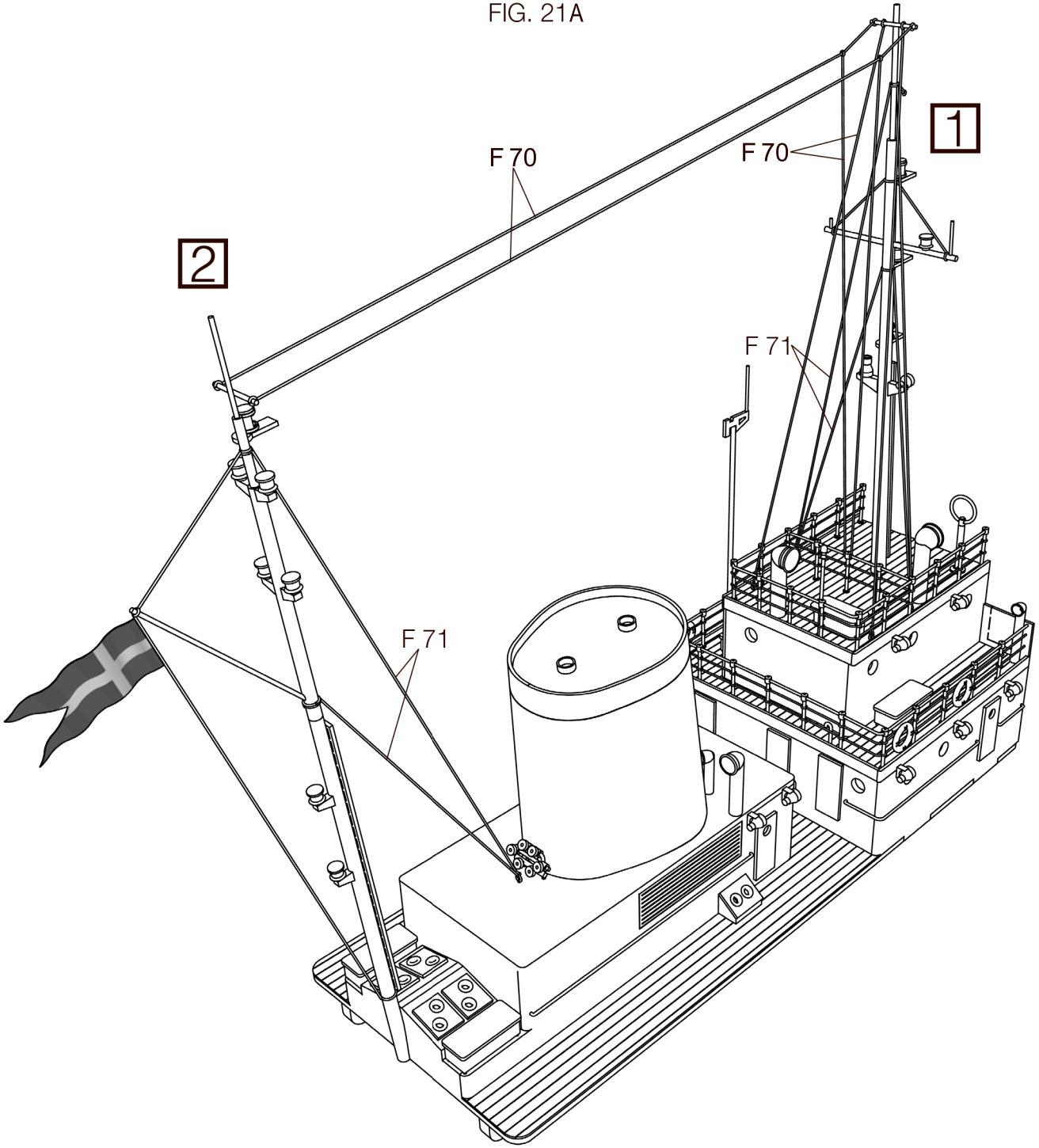

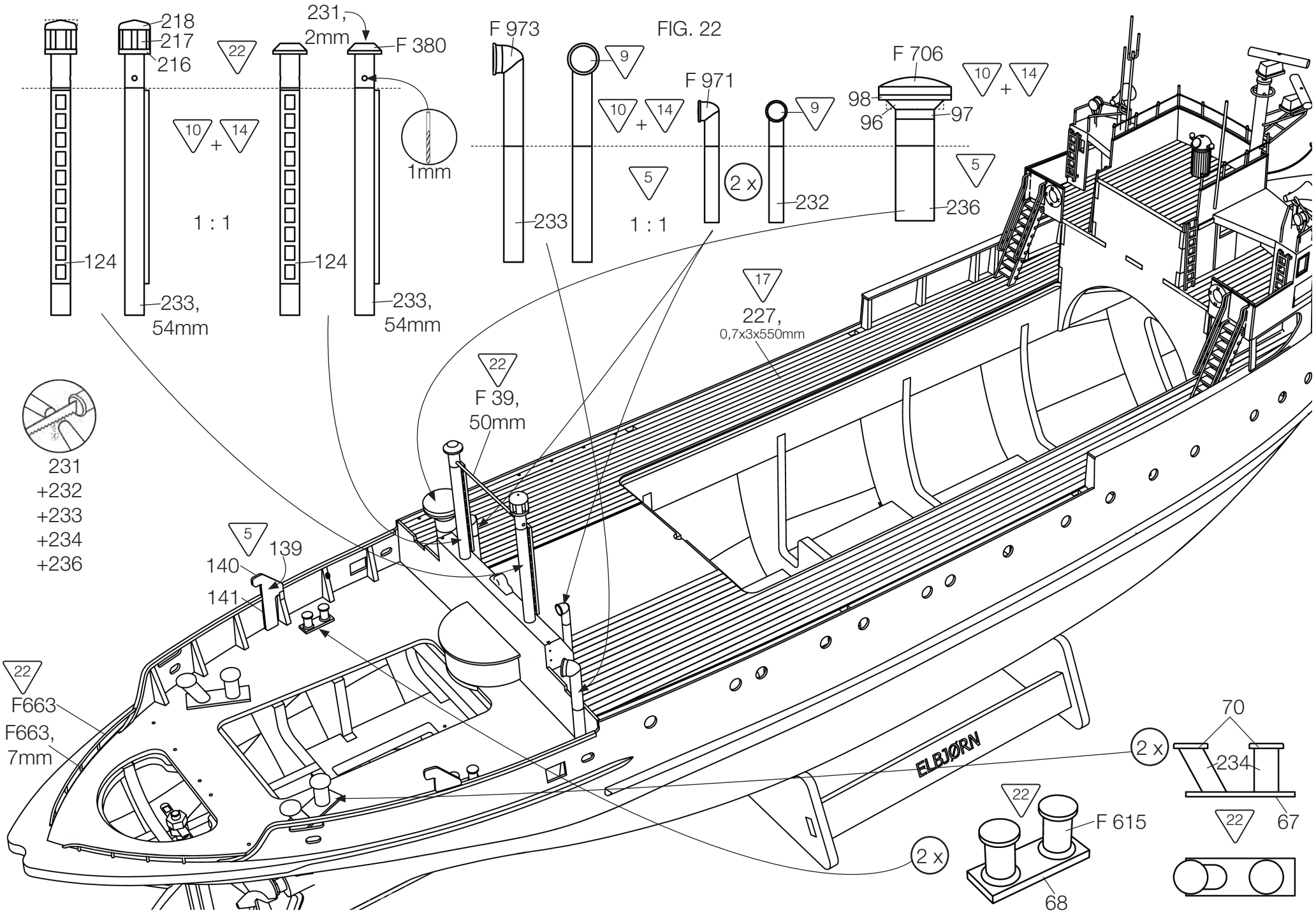
FIG. 22
218
217
216
22
231,
2mm
F 380
1mm
10 + 14
1 : 1
124
233,
54mm
124
233,
54mm
F 973
9
10 + 14
F 971
9
5
2 x
1 : 1
232
233
F 706
10 + 14
98
96
97
5
236
17
227,
0,7x3x550mm
22
F 39,
50mm
231
+232
+233
+234
+236
5
139
140
141
22
F663
F663,
7mm
ELBJØRN
2 x
70
234
67
22
F 615
2 x
68

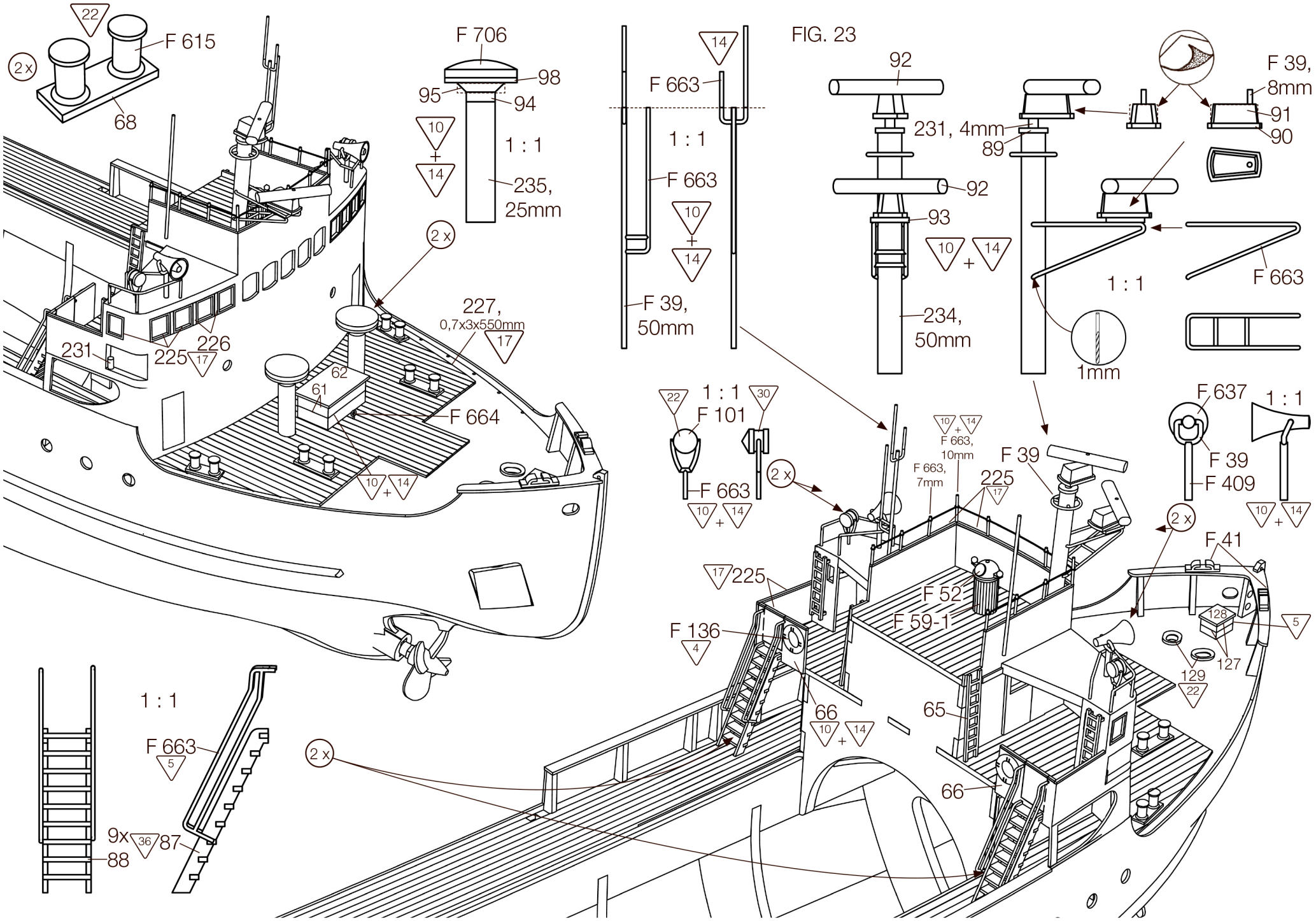
FIG. 23
22
F 615
2 x
68
F 706
98
95
94
10
+
14
1 : 1
235,
25mm
2 x
227,
0,7x3x550mm
17
231
225
17
226
62
61
F 664
10
+
14
14
F 663
1 : 1
F 663
10
+
14
F 39,
50mm
92
231, 4mm
89
92
93
10
+
14
234,
50mm
F 39,
8mm
91
90
1 : 1
F 663
1mm
22
1 : 1
30
F 101
F 663
10
+
14
2 x
10
+
14
F 663,
10mm
F 663,
7mm
F 39
225
17
F 637
1 : 1
F 39
F 409
10
+
14
2 x
F 41
17
225
F 52
F 59-1
F 136
4
66
10
+
14
65
66
128
5
127
129
22
1 : 1
F 663
5
9x
36
87
88
2 x

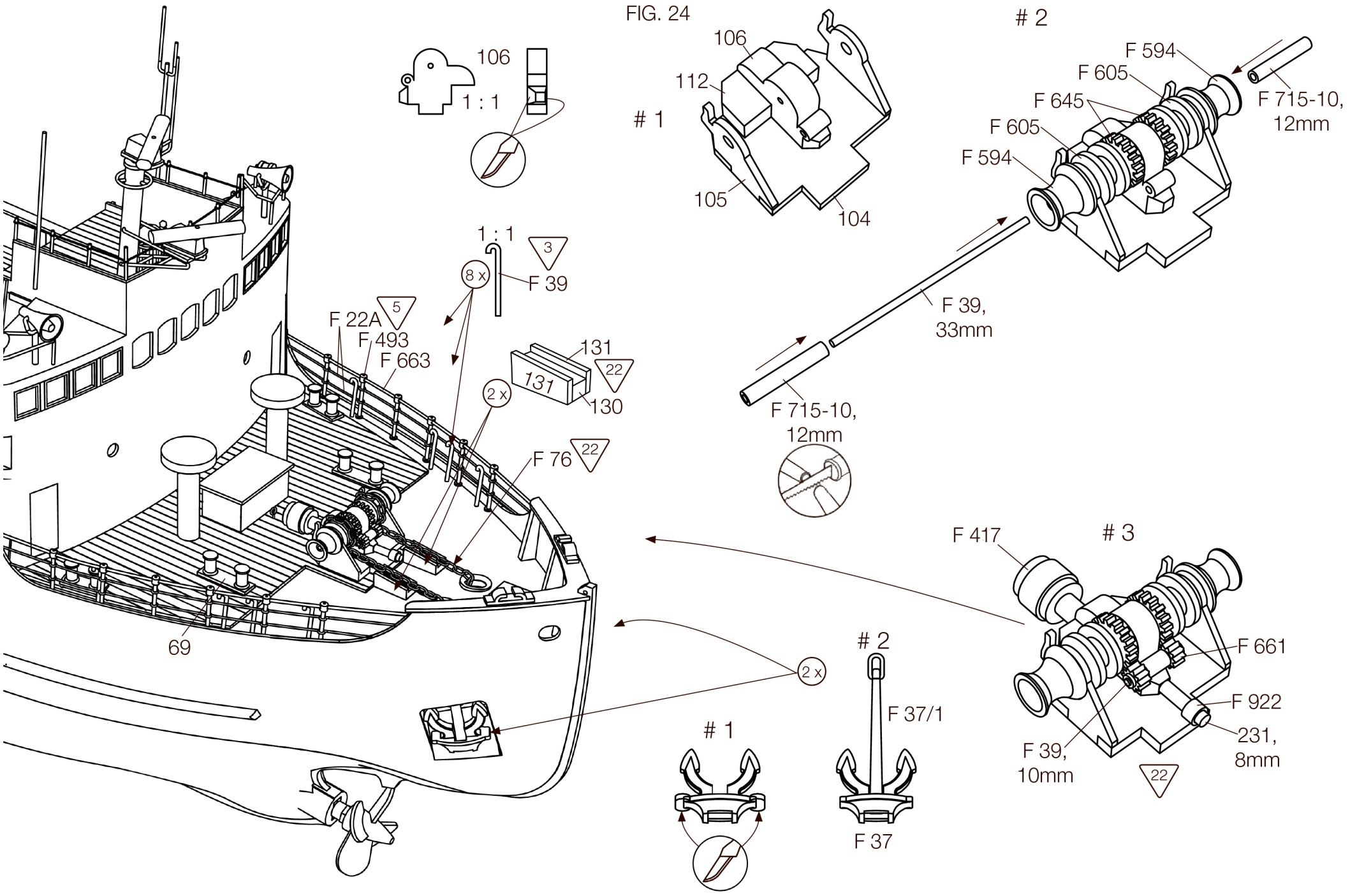
FIG. 24
106
1 : 1
1
112
105
104
2
F 594
F 605
F 645
F 605
F 594
F 715-10,
12mm
F 39,
33mm
F 715-10,
12mm
1 : 1
3
8 x
F 39
F 22A
5
F 493
F 663
131
131
22
2 x
130
F 76
22
69
2 x
2
F 37/1
1
F 37
F 417
3
F 661
F 922
231,
8mm
F 39,
10mm
22

FIG. 25

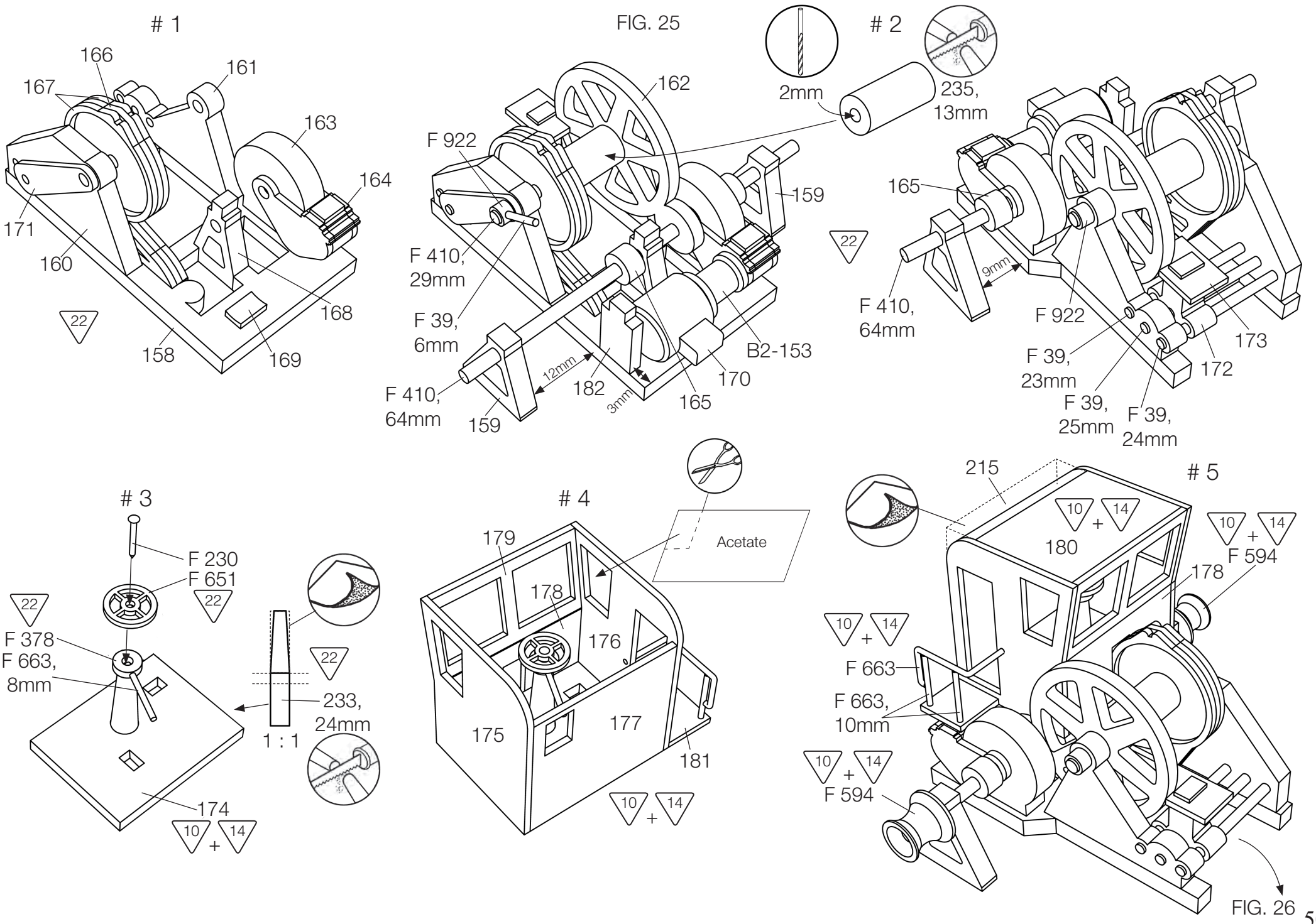
1
166
161
167
163
164
171
160
168
22
158
169
2
2mm
235,
13mm
162
F 922
159
F 410,
29mm
F 39,
6mm
B2-153
12mm
182
3mm
170
165
F 410,
64mm
159
165
22
9mm
F 410,
64mm
F 922
173
F 39,
23mm
172
F 39,
25mm
F 39,
24mm
3
F 230
F 651
22
22
F 378
F 663,
8mm
22
233,
24mm
1 : 1
174
10
+
14
4
Acetate
179
178
176
175
177
181
10
+
14
5
215
10
+
14
180
10
+
14
F 594
178
10
+
14
F 663
F 663,
10mm
10
+
14
F 594

FIG. 26

FIG. 26

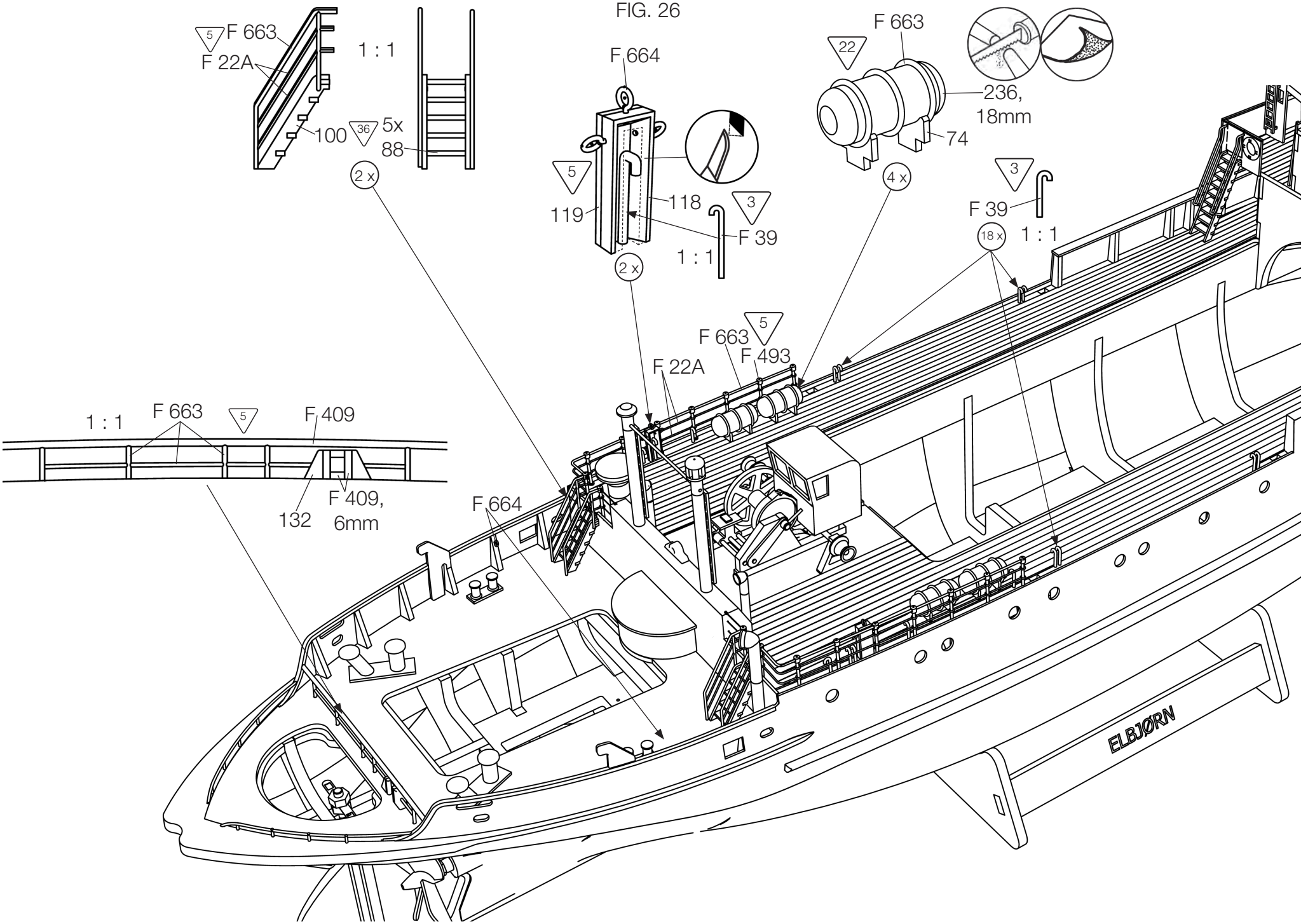
5
F 663
F 22A
1 : 1
100
36
5x
88
2 x
F 664
5
119
118
3
F 39
1 : 1
2 x
22
F 663
236,
18mm
74
4 x
3
F 39
18 x
1 : 1
5
F 663
F 493
F 22A
1 : 1
F 663
5
F 409
F 409,
6mm
132
F 664
ELBJØRN

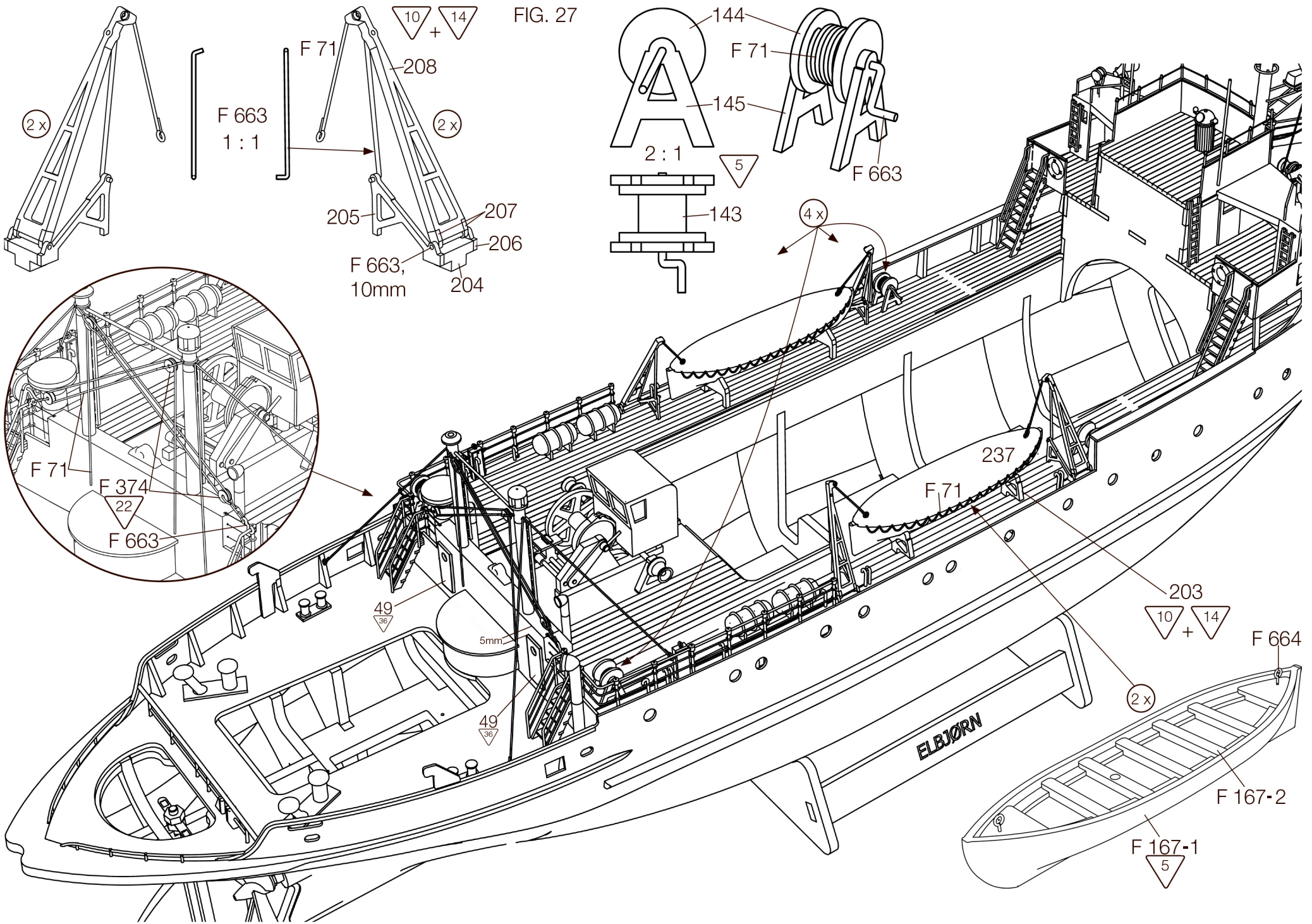
FIG. 27
2 x
F 663
1 : 1
F 71
208
10 + 14
2 x
205
207
206
F 663,
10mm
204
144
F 71
145
2 : 1
5
143
F 663
4 x
F 71
F 374
22
F 663
49
36
5mm
49
36
237
F 71
203
10 + 14
F 664
2 x
ELBJØRN
F 167-2
F 167-1
5

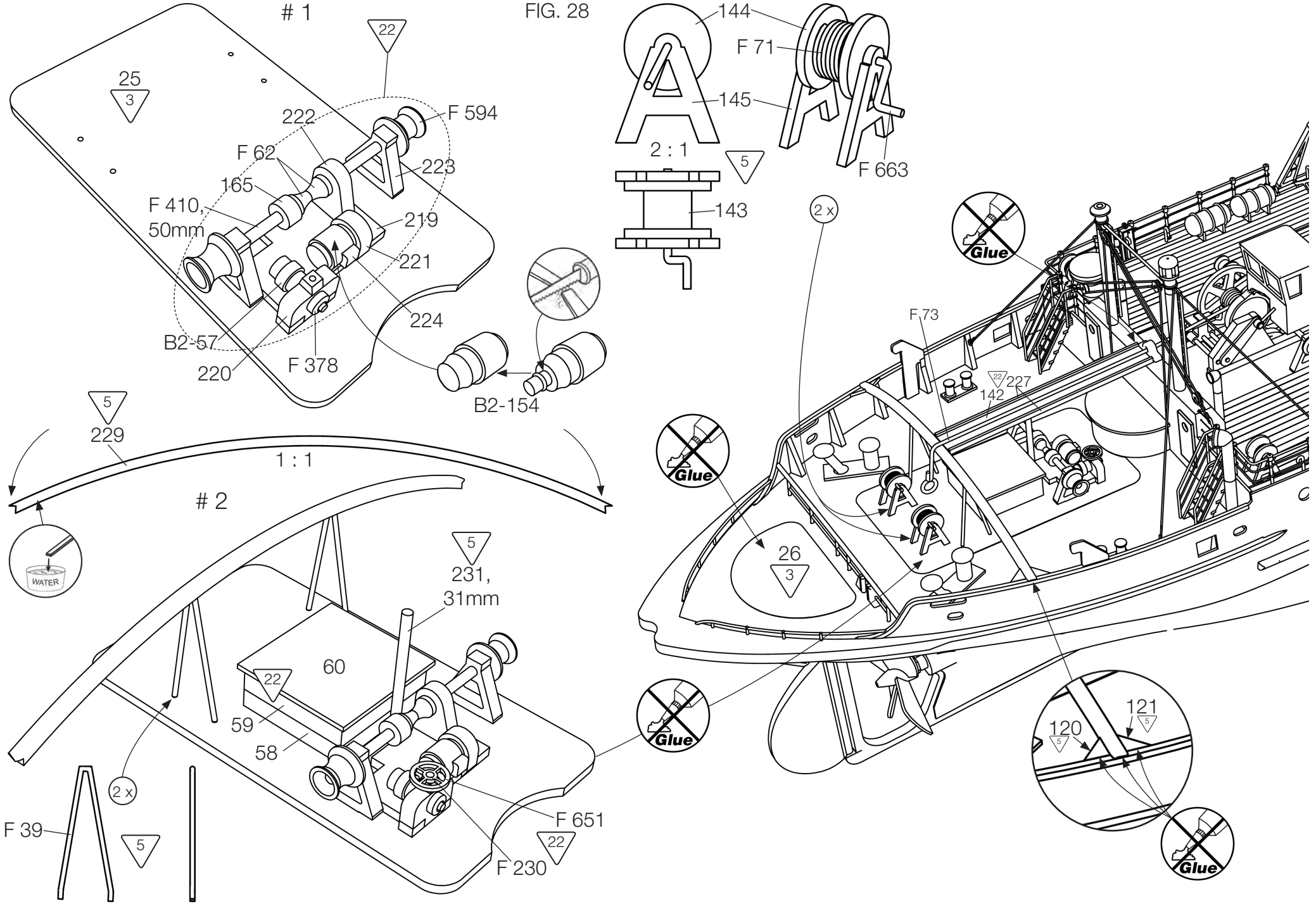
1
FIG. 28
22
25
3
222
F 594
F 62
223
165
F 410,
50mm
219
221
224
B2-57
220
F 378
B2-154
144
F 71
145
2 : 1
5
143
F 663
2 x
Glue
F 73
22
227
142
Glue
5
229
1 : 1
2
WATER
26
3
5
231,
31mm
60
22
59
58
2 x
F 39
5
F 651
22
F 230
Glue
121
5
120
5
Glue

FIG. 29

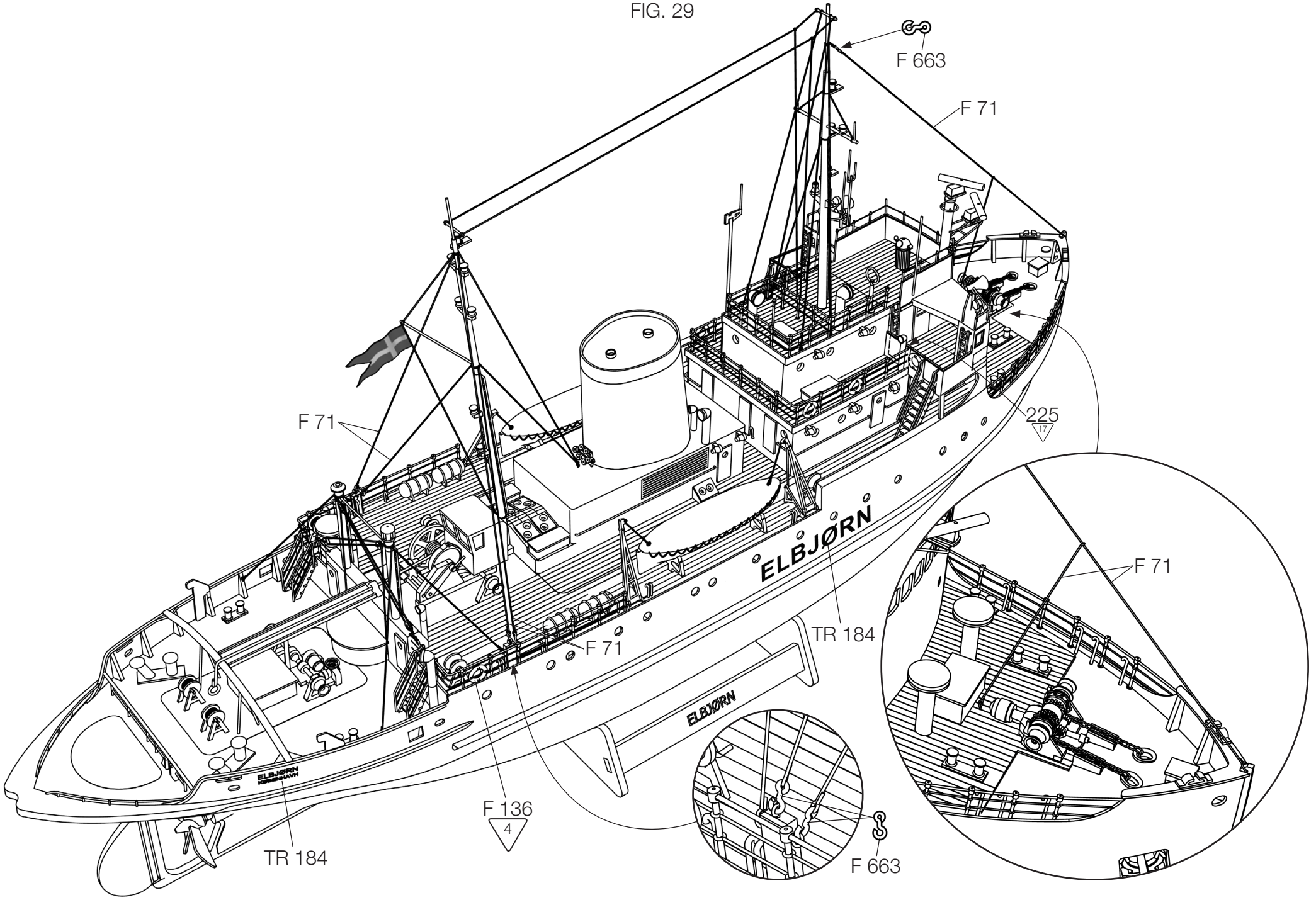
F 663
F 71
F 71
225
17
ELBJØRN
F 71
TR 184
F 71
ELBJØRN
F 136
4
TR 184
F 663


BILLING BOATS
DENMARK