Billing Boats®

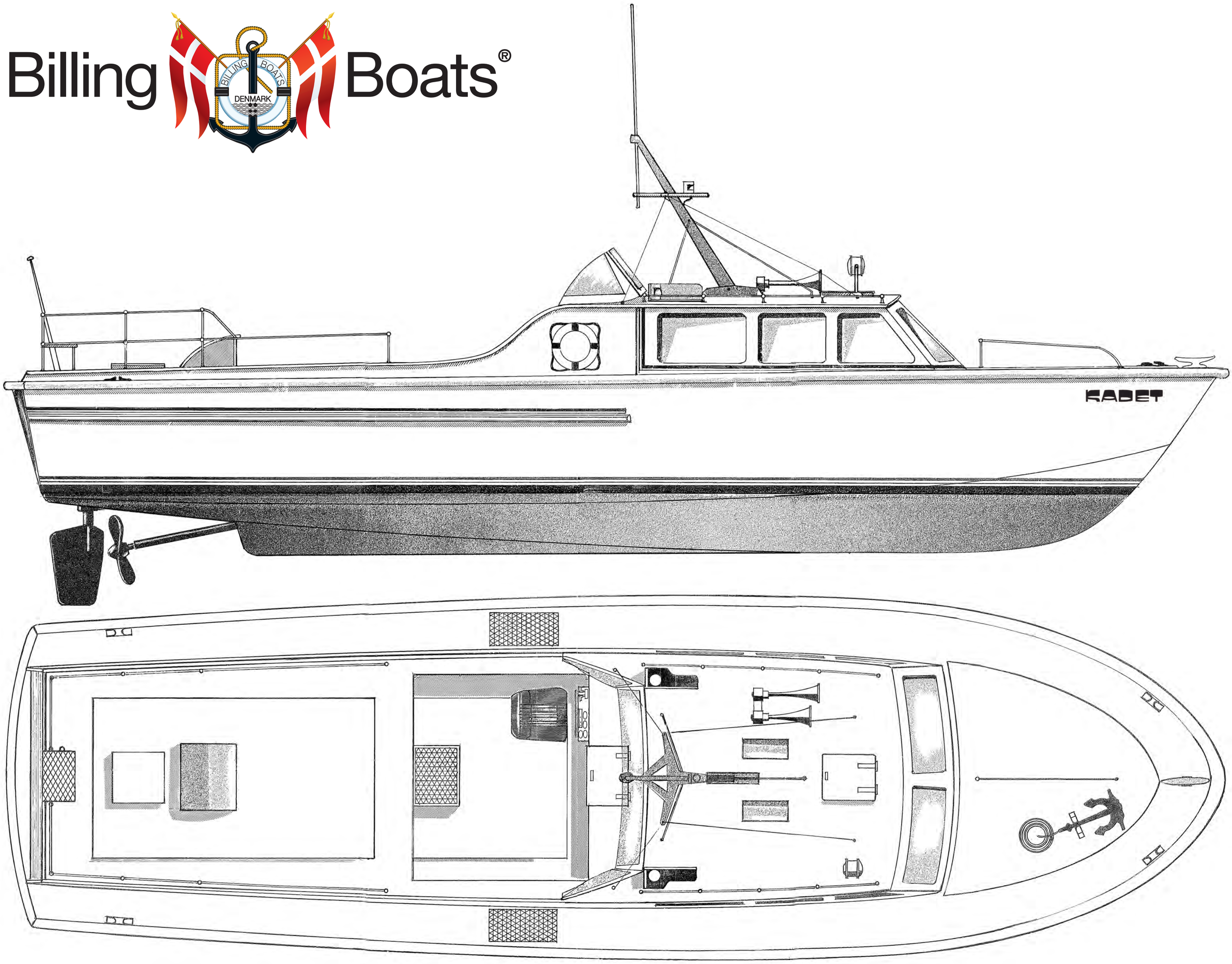

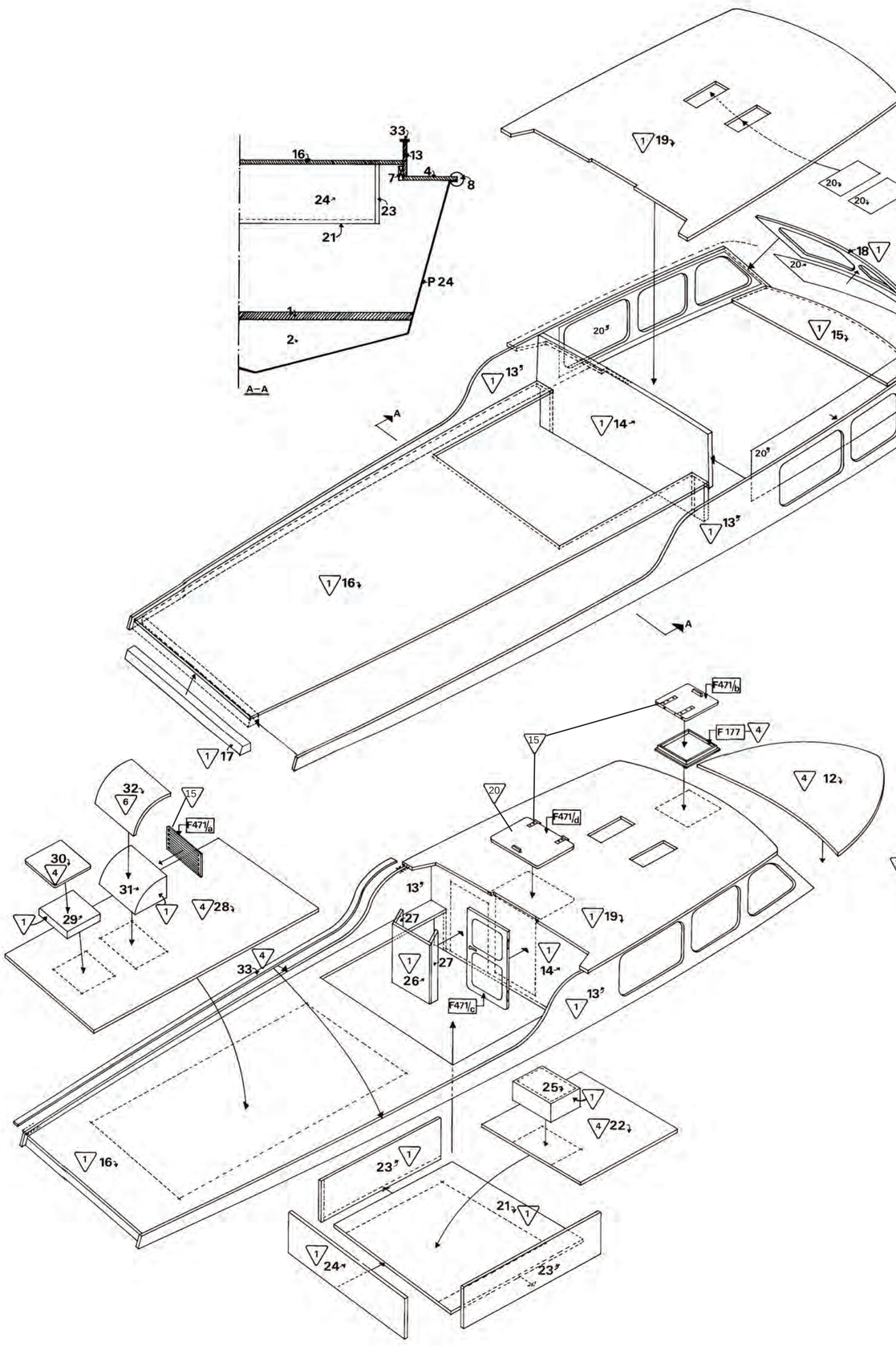

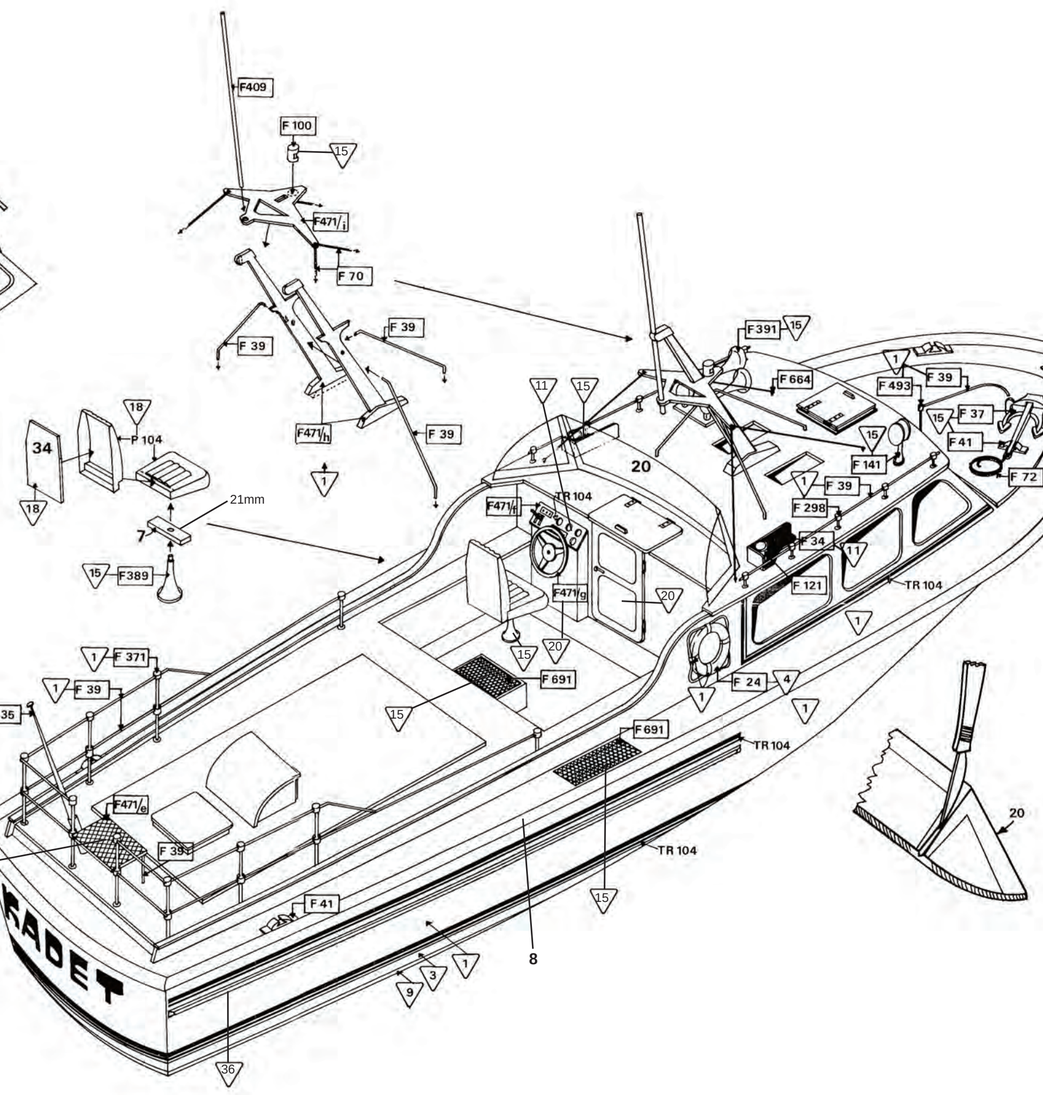

Drawn by:		**Billing Boats Denmark Aps**	
Date:			
Scale: **No Scale**	**Kadet „566„** *General Drawing*		Drawning no. 50-50029