SMIT ROTTERDAM “478” ***

BUILDING INSTRUCTION



This model is Copyright protected.
All Copyrights to the designs of this version of the Smit Rotterdam belongs to
Billing Boats Denmark Aps.

www.billingboats.com

50-51012 160221

DK

SMIT ROTTERDAM / LONDON

Bygget	1975 hos De Merwede værftet i Hardinxveld-Gissendam, Holland
Tonnage	2273 bruttoregistertons
Længde overalt	74,75m
Største bredde	15,68m
Motor	22000 HK
Fart	16,5 knob
Besætning	25 mand
Brandslukning	Total 400 tons/pr. t. med 14 atm., samt 10 tons skum
Slæbetrosser	2 stk. 7cm stålwire a 1500m, 1 stk. 16cm dobbelt nylon a 55 m
Længde model	95cm
Bredde model	20cm
Højde model	50cm
Skala	1 : 75

GB

SMIT ROTTERDAM / LONDON

Built	1975 Hardinxveld-Geissendam, Holland Shipyard de Merwede.
Tonnage	2273 gross register tonnage
Length overall	74,75m
Beam overall	15,68m
Motor	22000 I.H.P
Engine speed	16,5 knots
Crew	25 men
Fire-fighting	400 tons/hour with 14 ato. 10 tons foam
Wire	2 pieces a 9« of 1500m, A 55m double nylon hawser of 21« circ.
Lenght model	95cm
Beam model	20cm
Height	50cm
Scala	1 : 75

D

SMIT ROTTERDAM / LONDON

Baujahr	In 1975 in Hardinxveld-Giessendam, Holland. Werft: De Merwede.
Tonnage	2273 Bruttoregistertonnen
Länge überall	74,75m
Breite überall	15,68m
Motor	22000 PS
Motorfahrt	16,5 Knoten
Besatzung	25 Mann
Wasserkanone	400 Tonnen/ST. mit 14 atm. 10 Tonnen Schaum
Schleppseil	Dobbelt, je 9« Drehuneng von 1500 m. 55m dobbelte Nylon-Trosse, 21« Drehung.
Länge Modell	95cm
Breite Modell	20cm
Höhe Modell	50cm
Maststab	1 : 75

F

SMIT ROTTERDAM / LONDON

Construction	En 1975 à Hardinxveld-Giessendam Pays-Bas. Atelier maritime. De Merwede
Tonnage	2273 tonnes, poids brut enregistré
Longueur totale	74,75m
Largeur totale	15,68m
Moteur	22000 CV
Vitesse	16,5 noeuds
Equipage	25 hommes
Canon d'eau	400 tonnes/h a 14 atm.10 tonnes de mousse
Fil enroulé	Double de tournants à 9« sur 1500m. Une aussiére double en nylon, 55m, de tournants à 21«
Longueur model	95cm
Longueur	20cm
Hauteur longueur	50cm
Echelle	1 : 75

NL

SMIT ROTTERDAM / LONDON

Bouwjaar	1975 in Hardinxveld-Giessendam, Holland. Werf de Merwede
Tonnage	2273 BRT
Lengte o.all	74,75m
Breedte	15,68m
Motor	22000 pk
Snelheid	16,5 knopen
Bemanning	25 koppen
Capaciteit pomp v. waterkannon	400 ton water per uur onder 14 atm druk. Voorraad schui 10 ton
Sleepkabels	Staaldraad dubbel, ieder 9« omtrek lengte aan boord ca. 1500 m. Dubbel nylon, omtrek 21«, lengte 55m
Lengte model	95cm
Breedte model	20cm
Hoogte model	50cm
Schaal	1 : 75

E

SMIT ROTTERDAM / LONDON

Construido	En 1975 en los astilleros de De Merwede en Hardinxveld-Gissendam, Holanda
Toneladas T	onelaje bruto 2.273
Eslora total	74,75m
Ancho total	15,68m
Motor	22.000 CV
Velocidad	16,5 nudos
Tripulación	25 personas
Extinción del fuego	Un total de 400 toneladas por hora a 14 atmósferas, y 10 toneladas de espuma
Cables de rolque por	2 cables de acero de 7 cm 1.500 m. 1 cable de nilón de 16 cm por 55 m.
Largo del modelo	95 cm
Ancho del modelo	20 cm
Altura del palo	50 cm
Relación	1 : 75

I

SMIT ROTTERDAM / LONDON

Anno di costruzione	1975 a Hardinxveld-Giessendam; Olanda Cantieri Navali De Merwede
Tonnellaggio	2273 t (tonnellaggio complessivo)
Lunghezza complessiva	74,75m
Larghezza complessiva	15,68 m
Motore	22.000 PS
Velocità max.	16,5 nodi
Equipaggio	25 persone
Cannone	acquatico 400 t/h con 14 atm.; 10 t di spuma
Fune da rimorchio	Doppia fune da 1.500 m; torsione ogni 9«; 55 m gomena doppia in nylon, torsione ogni 21«
Lunghezza del modello	95 cm
Larghezza del modello	20 cm
Altezza del modello	50 cm
Scala	1:75

P

SMIT ROTTERDAM / LONDON

Data de construção	1975, no estaleiro De Merwede, Hardinxveld-Gissendam, Holanda.
Tonelagem	2273 toneladas brutas
Comprimento total	74,75m
Maior largura	15,68m
Motor	22000 HP
Velocidade	16,5 nós
Tripulação	25 tripulantes
Extinção de incêndio	Total de 400 t/h a 14 atm., assim como 10 toneladas de espuma
Cabos de arrastro	2 unidades de cabo de aço de 7 cm de diâm.e de 1.500 m 1 un. de corda de nylon duplo de 16 cm de diâm.e 55 m de comprimento
Comprimento do modelo	95cm
Largura do modelo	20cm
Altura do modelo.	50cm
Escala	1:75

Table contents for “SMIT ROTTERDAM” Art. No. 478

Pcs.	No.	Dimension	Material	DK	GB	D	F
1	1	5mm x-veneér	3287L	Køl	Keel	Kiel	Quille
1	2	5mm x-veneér	3287L	Køl	Keel	Kiel	Quille
1	3	5mm x-veneér	3287L	Køl	Keel	Kiel	Quille
1	4	5mm x-veneér	3288L	Spant	Frame	Spant	Couple
1	5	5mm x-veneér	3287L	Spant	Frame	Spant	Couple
1	6	5mm x-veneér	3288L	Spant	Frame	Spant	Couple
1	7	5mm x-veneér	3288L	Spant	Frame	Spant	Couple
1	8	5mm x-veneér	3288L	Spant	Frame	Spant	Couple
1	9	5mm x-veneér	3288L	Spant	Frame	Spant	Couple
1	10	5mm x-veneér	3288L	Spant	Frame	Spant	Couple
1	11	5mm x-veneér	3288L	Spant	Frame	Spant	Couple
1	12	5mm x-veneér	3288L	Spant	Frame	Spant	Couple
1	13	5mm x-veneér	3288L	Spant	Frame	Spant	Couple
1	14	5mm x-veneér	3288L	Spant	Frame	Spant	Couple
1	15	5mm x-veneér	3288L	Spant	Frame	Spant	Couple
1	16	5mm x-veneér	3287L	Spant	Frame	Spant	Couple
1	17	5mm x-veneér	3288L	Spant	Frame	Spant	Couple
1	18	5mm x-veneér	3288L	Spant	Frame	Spant	Couple
1	19	5mm x-veneér	3288L	Forstærkning	Strenghtening	Verstärkung	Renfort
1	20	5mm x-veneér	3288L	Bjælkebugt	Former	Balkenbucht	Traverses
1	21	5mm x-veneér	3287L	Bjælkebugt	Former	Balkenbucht	Traverses
1	22	5mm x-veneér	3288L	Bjælkebugt	Former	Balkenbucht	Traverses
1	23	5mm x-veneér	3288L	Bjælkebugt	Former	Balkenbucht	Traverses
1	24	5mm x-veneér	3287L	Bjælkebugt	Former	Balkenbucht	Traverses
2	25	5mm x-veneér	3287L	Forstærkning	Strenghtening	Verstärkung	Renfort
1	26	5mm x-veneér	3288L	Bjælkebugt	Former	Balkenbucht	Traverses
1	27	5mm x-veneér	3288L	Bjælkebugt	Former	Balkenbucht	Traverses
2	28	5mm x-veneér	3288L	Forstærkning	Strenghtening	Verstärkung	Renfort
2	29	4mm x-veneér	3289L	Forstærkning	Strenghtening	Verstärkung	Renfort
1	30	4mm x-veneér	3289L	Forstærkning	Strenghtening	Verstärkung	Renfort
2	31	2mm x-veneér	3292L	Dæk	Deck	Deck	Pont
1	32	2mm x-veneér	3293L	Skot	Bulhead	Schott	Cloison
2	33	2mm x-veneér	3293L	Skot	Bulhead	Schott	Cloison

1	34	2mm x-veneér	3293L	Skot	Bulhead	Schott	Cloison
1	35	2mm x-veneér	3293L	Skot	Bulhead	Schott	Cloison
1	36	2mm x-veneér	3291L	Skot	Bulhead	Schott	Cloison
2	37	2mm x-veneér	3293L	Skot	Bulhead	Schott	Cloison
3	38	2mm x-veneér	3294L	Dør	Door	Türen	Portes
2	39	2mm x-veneér	3294L	Dør	Door	Türen	Portes
6	40	4mm x-veneér	3289L	Skot	Bulhead	Schott	Cloison
6	41	4mm x-veneér	3289L	Skot	Bulhead	Schott	Cloison
1	42	2mm x-veneér	3292L	Dæk	Deck	Deck	Pont
1	43	2mm x-veneér	3292L	Dæk	Deck	Deck	Pont
1	44	2mm x-veneér	3292L	Skot	Bulhead	Schott	Cloison
2	45	2mm x-veneér	3292L	Kahyt	Cabin	Kajüte	Cabine
1	46	2mm x-veneér	3292L	Kahyt	Cabin	Kajüte	Cabine
1	47	2mm x-veneér	3292L	Kahyt	Cabin	Kajüte	Cabine
4	48	2mm x-veneér	3293L	Kahyt	Cabin	Kajüte	Cabine
2	49	2mm x-veneér	3291L	Kahyt	Cabin	Kajüte	Cabine
1	50	2mm x-veneér	3293L	Kahyt	Cabin	Kajüte	Cabine
1	51	2mm x-veneér	3293L	Kahyt	Cabin	Kajüte	Cabine
2	52	2mm x-veneér	3293L	Kahyt	Cabin	Kajüte	Cabine
2	53	2mm x-veneér	3293L	Kahyt	Cabin	Kajüte	Cabine
2	54	2mm x-veneér	3293L	Kahyt	Cabin	Kajüte	Cabine
1	55	2mm x-veneér	3293L	Kahyt	Cabin	Kajüte	Cabine
1	56	2mm x-veneér	3293L	Kahyt	Cabin	Kajüte	Cabine
1	57	2mm x-veneér	3293L	Kahyt	Cabin	Kajüte	Cabine
5	58	2mm x-veneér	3291L	Dør	Door	Türen	Portes
2	59	2mm x-veneér	3291L	Dør	Door	Türen	Portes
1	60	4mm x-veneér	3289L	Kahyt	Cabin	Kajüte	Cabine
1	61	2mm x-veneér	3293L	Luge	Hatch	Luke	Escoutilles
4	62	4mm x-veneér	3289L	Styrepult	Control desk	Leitstand	Bureau de contrôle
2	63	2mm x-veneér	3291L	Dæk	Deck	Deck	Pont
2	64	2mm x-veneér	3293L	Beklædning	Plankingstrips	Beplankung	Baguettes de bordé
2	65	2mm x-veneér	3294L	Beklædning	Plankingstrips	Beplankung	Baguettes de bordé
2	66	5mm x-veneér	3288L	Dyser, stævn	Bow, nozzels	Düsen, Vorsteven	Turbine d'hélice arriér
4	67	5mm x-veneér	3287L	Dyser, stævn	Bow, nozzels	Düsen, Vorsteven	Turbine d'hélice arriér
2	68	2mm x-veneér	3294L	Beklædning	Plankingstrips	Beplankung	Baguettes de bordé

2	69	4mm x-veneér	3289L	Dyser, stævn	Bow, nozzels	Düsen, Vorsteven	Turbine d'hélice arriér
2	70	2mm x-veneér	3291L	Beklædning	Plankingstrips	Beplankung	Baguettes de bordé
1	71	18x25x255mm	Balsa	Klods, stævn	Block, stem	Block, steven	Poulie, étrave
2	72	2mm x-veneér	3294L	Beklædning	Plankingstrips	Beplankung	Baguettes de bordé
2	74	2mm x-veneér	3294L	Beklædning	Plankingstrips	Beplankung	Baguettes de bordé
18	75	5mm x-veneér	3288L	Konsol	Console	Konsole	Console
2	76	5mm x-veneér	3288L	Konsol	Console	Konsole	Console
2	77	5mm x-veneér	3287L	Konsol	Console	Konsole	Console
1	78	4mm x-veneér	3289L	Motorfundament	Engine console	Motorfundmanent	Moteur console
2	79	3mm x-veneér	3290L	Bundplade	Sole-plate	Bodenplatte	Trolé borde des fonds
2	80	3mm x-veneér	3290L	Forstærkning	Strenghtening	Verstärkung	Renfort
4	81	4mm x-veneér	3289L	Forstærkning	Strenghtening	Verstärkung	Renfort
4	82	4mm x-veneér	3289L	Forstærkning	Strenghtening	Verstärkung	Renfort
4	83	4mm x-veneér	3289L	Forstærkning	Strenghtening	Verstärkung	Renfort
4	84	4mm x-veneér	3289L	Forstærkning	Strenghtening	Verstärkung	Renfort
2	85	4mm x-veneér	3289L	Slæbestøtte	Towing-support	Schlepstütze	Croc de support
2	86	4mm x-veneér	3289L	Slæbestøtte	Towing-support	Schlepstütze	Croc de support
2	87	4mm x-veneér	3289L	Slæbestøtte	Towing-support	Schlepstütze	Croc de support
2	88	4mm x-veneér	3289L	Slæbestøtte	Towing-support	Schlepstütze	Croc de support
2	89	1mm x-veneér	3295L	Beklædning	Plankingstrips	Beplankung	Baguettes de bordé
2	90	2mm x-veneér	3294L	Forstærkning	Strenghtening	Verstärkung	Renfort
2	91	2mm x-veneér	3294L	Forstærkning	Strenghtening	Verstärkung	Renfort
2	92	2mm x-veneér	3294L	Forstærkning	Strenghtening	Verstärkung	Renfort
2	93	2mm x-veneér	3294L	Forstærkning	Strenghtening	Verstärkung	Renfort
2	94	2mm x-veneér	3292L	Ræling	Rail	Reling	Plat-bord
14	95	2mm x-veneér	3293L	Forstærkning	Strenghtening	Verstärkung	Renfort
2	96	2mm x-veneér	3293L	Forstærkning	Strenghtening	Verstärkung	Renfort
1	97	1mm x-veneér	3295L	Beklædning	Plankingstrips	Beplankung	Baguettes de bordé
6	98	2mm x-veneér	3293L	Forstærkning	Strenghtening	Verstärkung	Renfort
2	99	2mm x-veneér	3293L	Fundament	Base	Fundament	Fondement
2	100	2mm x-veneér	3293L	Forstærkning	Strenghtening	Verstärkung	Renfort
1	101	1mm x-veneér	3295L	Rælingsliste	Railingstrip	Relingsleiste	Bag. p. bastingage
2	102	1mm x-veneér	3295L	Rælingsliste	Railingstrip	Relingsleiste	Bag. p. bastingage
2	103	3mm x-veneér	3290L	Hjælpestykke	Auxiliary piece	Hilfsstücke	Pièce annexes
1	104	5mm x-veneér	3288L	Hjælpestykke	Auxiliary piece	Hilfsstücke	Pièce annexes

2	105	4mm x-veneér	3289L	Ror	Rudder	Rohr	Gouvernail
1	106	2mm x-veneér	3292L	Maskinruf	Engine doghouse	Maschinenruf	Chambre d.Machine
1	107	2mm x-veneér	3292L	Maskinruf	Engine doghouse	Maschinenruf	Chambre d.Machine
1	108	2mm x-veneér	3292L	Maskinruf	Engine doghouse	Maschinenruf	Chambre d.Machine
1	109	2mm x-veneér	3294L	Maskinruf	Engine doghouse	Maschinenruf	Chambre d.Machine
1	110	2mm x-veneér	3292L	Maskinruf	Engine doghouse	Maschinenruf	Chambre d.Machine
1	111	2mm x-veneér	3293L	Maskinruf	Engine doghouse	Maschinenruf	Chambre d.Machine
1	112	2mm x-veneér	3293L	Maskinruf	Engine doghouse	Maschinenruf	Chambre d.Machine
1	113	2mm x-veneér	3291L	Maskinruf	Engine doghouse	Maschinenruf	Chambre d.Machine
2	114	2mm x-veneér	3291L	Maskinruf	Engine doghouse	Maschinenruf	Chambre d.Machine
2	115	2mm x-veneér	3294L	Maskinruf	Engine doghouse	Maschinenruf	Chambre d.Machine
18	117	5mm x-veneér	3287L	Maskinruf	Engine doghouse	Maschinenruf	Chambre d.Machine
1	118	2mm x-veneér	3294L	Luge	Hatch	Luke	Escoutilles
2	119	3mm x-veneér	3290L	Liste	Strip	Leiste	Baguette
1	120	3mm x-veneér	3290L	Liste	Strip	Leiste	Baguette
2	121	2mm x-veneér	3293L	Nedgang	Companion	Niedergang	Ecoutille avant
2	122	2mm x-veneér	3293L	Nedgang	Companion	Niedergang	Ecoutille avant
2	123	2mm x-veneér	3294L	Bedding	Slip	Helling	Cale de construction
2	124	2mm x-veneér	3294L	Bedding	Slip	Helling	Cale de construction
1	125	2mm x-veneér	3293L	Kahyt	Cabin	Kajüte	Cabine
1	126	2mm x-veneér	3293L	Kahyt	Cabin	Kajüte	Cabine
1	127	2mm x-veneér	3293L	Kahyt	Cabin	Kajüte	Cabine
2	128	2mm x-veneér	3291L	Kahyt	Cabin	Kajüte	Cabine
2	129	2mm x-veneér	3291L	Kahyt	Cabin	Kajüte	Cabine
2	130	2mm x-veneér	3293L	Kahyt	Cabin	Kajüte	Cabine
2	131	2mm x-veneér	3293L	Kahyt	Cabin	Kajüte	Cabine
1	132	2mm x-veneér	3293L	Kahyt	Cabin	Kajüte	Cabine
4	133	2mm x-veneér	3291L	Kahyt	Cabin	Kajüte	Cabine
2	134	2mm x-veneér	3291L	Kahyt	Cabin	Kajüte	Cabine
2	135	2mm x-veneér	3293L	Kahyt	Cabin	Kajüte	Cabine
2	136	2mm x-veneér	3293L	Kahyt	Cabin	Kajüte	Cabine
1	137	2mm x-veneér	3292L	Kahyt	Cabin	Kajüte	Cabine
1	138	4mm x-veneér	3289L	Forstærkning	Strenghtening	Verstärkung	Renfort
2	139	2mm x-veneér	3293L	Tag	Roof	Dach	Toit
1	140	2mm x-veneér	3291L	Forstærkning	Strenghtening	Verstärkung	Renfort

1	141	2mm x-veneér	3291L	Styrhus	Cabin	Steuerhaus	Cabine
2	142	2mm x-veneér	3292L	Styrhus	Cabin	Steuerhaus	Cabine
1	143	2mm x-veneér	3293L	Styrhus	Cabin	Steuerhaus	Cabine
1	144	2mm x-veneér	3292L	Styrhus	Cabin	Steuerhaus	Cabine
2	145	2mm x-veneér	3291L	Styrhus	Cabin	Steuerhaus	Cabine
1	146	2mm x-veneér	3292L	Styrhus	Cabin	Steuerhaus	Cabine
2	147	2mm x-veneér	3292L	Styrhus	Cabin	Steuerhaus	Cabine
2	148	2mm x-veneér	3291L	Styrhus	Cabin	Steuerhaus	Cabine
2	149	2mm x-veneér	3292L	Styrhus	Cabin	Steuerhaus	Cabine
2	150	2mm x-veneér	3292L	Styrhus	Cabin	Steuerhaus	Cabine
2	151	2mm x-veneér	3292L	Styrhus	Cabin	Steuerhaus	Cabine
1	152	2mm x-veneér	3293L	Styrhus	Cabin	Steuerhaus	Cabine
2	153	2mm x-veneér	3291L	Styrhus	Cabin	Steuerhaus	Cabine
2	154	2mm x-veneér	3294L	Styrhus	Cabin	Steuerhaus	Cabine
2	155	2mm x-veneér	3294L	Styrhus	Cabin	Steuerhaus	Cabine
2	156	2mm x-veneér	3294L	Styrhus	Cabin	Steuerhaus	Cabine
1	157	2mm x-veneér	3294L	Styrepult	Control desk	Leitstand	Bureau de contrôle
1	158	2mm x-veneér	3292L	Styrepult	Control desk	Leitstand	Bureau de contrôle
2	159	2mm x-veneér	3294L	Styrepult	Control desk	Leitstand	Bureau de contrôle
2	160	2mm x-veneér	3294L	Styrepult	Control desk	Leitstand	Bureau de contrôle
1	161	2mm x-veneér	3294L	Kasse	Box	Kiste	Caisse
1	162	2mm x-veneér	3294L	Kasse	Box	Kiste	Caisse
1	163	2mm x-veneér	3294L	Kasse	Box	Kiste	Caisse
2	164	2mm x-veneér	3291L	Bænk	Bench	Bank	Banc
1	165	2mm x-veneér	3294L	Bænk	Bench	Bank	Banc
1	166	2mm x-veneér	3294L	Bænk	Bench	Bank	Banc
1	167	2mm x-veneér	3294L	Kasse	Box	Kiste	Caisse
2	168	2mm x-veneér	3294L	Kasse	Box	Kiste	Caisse
1	169	2mm x-veneér	3294L	Kasse	Box	Kiste	Caisse
2	170	1mm x-veneér	3295L	Trappe/håndliste	Stairway/handrail	Treppe/Handleiste	Escalier/main coulante
1	171	2mm x-veneér	3291L	Styrepult	Control desk	Leitstand	Bureau de contrôle
2	172	2mm x-veneér	3291L	Styrepult	Control desk	Leitstand	Bureau de contrôle
1	173	2mm x-veneér	3291L	Styrepult	Control desk	Leitstand	Bureau de contrôle
1	174	2mm x-veneér	3291L	Styrepult	Control desk	Leitstand	Bureau de contrôle
1	175	2mm x-veneér	3291L	Styrepult	Control desk	Leitstand	Bureau de contrôle

1	176	2mm x-veneér	3291L	Styrepult	Control desk	Leitstand	Bureau de contrôle
1	177	2mm x-veneér	3292L	Tag	Roof	Dach	Toit
2	178	2mm x-veneér	3291L	Styrhus	Cabin	Steuerhaus	Cabine
1	179	2mm x-veneér	3291L	Styrhus	Cabin	Steuerhaus	Cabine
2	180	2mm x-veneér	3291L	Liste	Strip	Leiste	Baguette
1	181	2mm x-veneér	3291L	Liste	Strip	Leiste	Baguette
2	182	2mm x-veneér	3291L	Liste	Strip	Leiste	Baguette
1	183	2mm x-veneér	3293L	Liste	Strip	Leiste	Baguette
1	184	2mm x-veneér	3292L	Luge	Hatch	Luke	Escoutilles
1	185	2mm x-veneér	3293L	Kasse	Box	Kiste	Caisse
2	186	2mm x-veneér	3293L	Kasse	Box	Kiste	Caisse
1	187	2mm x-veneér	3293L	Kasse	Box	Kiste	Caisse
1	188	2mm x-veneér	3293L	Kasse	Box	Kiste	Caisse
1	189	2mm x-veneér	3293L	Kasse	Box	Kiste	Caisse
13	190	2mm x-veneér	3294L	Konsol	Console	Konsole	Console
1	191	2mm x-veneér	3293L	Platform	Platform	Plattform	Plateforme
1	192	2mm x-veneér	3293L	Platform	Platform	Plattform	Plateforme
1	193	2mm x-veneér	3293L	Platform	Platform	Plattform	Plateforme
1	194	2mm x-veneér	3293L	Platform	Platform	Plattform	Plateforme
1	195	2mm x-veneér	3292L	Liste	Strip	Leiste	Baguette
2	196	2mm x-veneér	3292L	Liste	Strip	Leiste	Baguette
2	197	2mm x-veneér	3292L	Liste	Strip	Leiste	Baguette
2	198	2mm x-veneér	3292L	Liste	Strip	Leiste	Baguette
1	199	2mm x-veneér	3293L	Solskærm	Sunshade	Sonnenschutz	Pare-soleil
2	200	2mm x-veneér	3292L	Solskærm	Sunshade	Sonnenschutz	Pare-soleil
1	201	2mm x-veneér	3291L	Liste	Strip	Leiste	Baguette
2	202	2mm x-veneér	3291L	Liste	Strip	Leiste	Baguette
2	203	2mm x-veneér	3293L	Skorsten	Funnel	Schornstein	Cheminée
2	204	2mm x-veneér	3293L	Skorsten	Funnel	Schornstein	Cheminée
2	205	2mm x-veneér	3293L	Skorsten	Funnel	Schornstein	Cheminée
2	206	2mm x-veneér	3293L	Skorsten	Funnel	Schornstein	Cheminée
2	207	2mm x-veneér	3293L	Skorsten	Funnel	Schornstein	Cheminée
2	208	2mm x-veneér	3293L	Skorsten	Funnel	Schornstein	Cheminée
8	209	1mm x-veneér	3295L	Skorsten	Funnel	Schornstein	Cheminée
2	210	2mm x-veneér	3291L	Radartårn	Radar tower	Radarturm	Radar tour

1	211	2mm x-veneér	3291L	Radartårn	Radar tower	Radarturm	Radar tour
1	212	1mm x-veneér	3295L	Stige	Ladder	Leider	Echelle
2	213	2mm x-veneér	3291L	Radartårn	Radar tower	Radarturm	Radar tour
1	214	2mm x-veneér	3292L	Radartårn	Radar tower	Radarturm	Radar tour
1	215	2mm x-veneér	3292L	Radartårn	Radar tower	Radarturm	Radar tour
1	216	2mm x-veneér	3292L	Radartårn	Radar tower	Radarturm	Radar tour
2	217	2mm x-veneér	3292L	Radartårn	Radar tower	Radarturm	Radar tour
1	218	2mm x-veneér	3292L	Radartårn	Radar tower	Radarturm	Radar tour
2	219	2mm x-veneér	3292L	Radartårn	Radar tower	Radarturm	Radar tour
2	220	2mm x-veneér	3292L	Radartårn	Radar tower	Radarturm	Radar tour
1	221	2mm x-veneér	3292L	Radartårn	Radar tower	Radarturm	Radar tour
1	222	2mm x-veneér	3292L	Radartårn	Radar tower	Radarturm	Radar tour
2	223	2mm x-veneér	3292L	Radartårn	Radar tower	Radarturm	Radar tour
2	224	2mm x-veneér	3294L	Styrhus	Wheel house	Steuerhaus	Timonerie
4	225	4mm x-veneér	3289L	Redningsflåde	Life raft	Rettungsinsel	Redeau de salut
8	226	4mm x-veneér	3289L	Redningsflåde	Life raft	Rettungsinsel	Redeau de salut
12	227	2mm x-veneér	3293L	Redningsflåde	Life raft	Rettungsinsel	Redeau de salut
8	228	1mm x-veneér	3295L	Redningsflåde	Life raft	Rettungsinsel	Redeau de salut
2	229	2mm x-veneér	3292L	Dør	Door	Türen	Portes
2	230	4mm x-veneér	3289L	Klyds	Fairlead	Klüsen	Chaumard
2	231	2mm x-veneér	3294L	Styrepult	Control desk	Leitstand	Bureau de contrôle
4	232	2mm x-veneér	3294L	Styrepult	Control desk	Leitstand	Bureau de contrôle
2	233	2mm x-veneér	3294L	Styrepult	Control desk	Leitstand	Bureau de contrôle
2	234	2mm x-veneér	3291L	Dør	Door	Türen	Portes
1	235	4mm x-veneér	3289L	Pullert-fundament	Bollard-base	Pollerunterlage	Bitte d'amarrage
2	236	1mm x-veneér	3295L	Spil	Winch	Winde	Treuil
2	237	1mm x-veneér	3295L	Spil	Winch	Winde	Treuil
2	238	1mm x-veneér	3295L	Spil	Winch	Winde	Treuil
2	239	4mm x-veneér	3289L	Spil	Winch	Winde	Treuil
1	240	2mm x-veneér	3294L	Pullert	Bollard	Poller	Bitte d'amarrage
2	241	1mm x-veneér	3295L	Pullert	Bollard	Poller	Bitte d'amarrage
2	242	4mm x-veneér	3289L	Pullert	Bollard	Poller	Bitte d'amarrage
4	243	1mm x-veneér	3295L	Pullert	Bollard	Poller	Bitte d'amarrage
8	244	1mm x-veneér	3295L	Pullert-fundament	Bollard-base	Pollerunterlage	Bitte d'amarrage
2	245	3mm x-veneér	3290L	Spil	Winch	Winde	Treuil

2	246	3mm x-veneér	3290L	Spil	Winch	Winde	Treuil
2	247	2mm x-veneér	3294L	Spil	Winch	Winde	Treuil
2	248	2mm x-veneér	3294L	Luge	Hatch	Luke	Escoutilles
2	249	4mm x-veneér	3289L	Luge	Hatch	Luke	Escoutilles
2	250	2mm x-veneér	3293L	Gummibåd	Rubber boat	Schlauchboot	Canot pneumatique
1	251	5mm x-veneér	3287L	Gummibåd	Rubber boat	Schlauchboot	Canot pneumatique
1	252	5mm x-veneér	3287L	Gummibåd	Rubber boat	Schlauchboot	Canot pneumatique
1	253	2mm x-veneér	3293L	Gummibåd	Rubber boat	Schlauchboot	Canot pneumatique
1	254	2mm x-veneér	3294L	Styrepult	Control desk	Leitstand	Bureau de contrôle
1	255	2mm x-veneér	3294L	Styrepult	Control desk	Leitstand	Bureau de contrôle
1	256	2mm x-veneér	3294L	Styrepult	Control desk	Leitstand	Bureau de contrôle
1	257	2mm x-veneér	3294L	Styrepult	Control desk	Leitstand	Bureau de contrôle
1	258	2mm x-veneér	3294L	Styrepult	Control desk	Leitstand	Bureau de contrôle
1	259	2mm x-veneér	3294L	Styrepult	Control desk	Leitstand	Bureau de contrôle
1	260	2mm x-veneér	3294L	Styrepult	Control desk	Leitstand	Bureau de contrôle
3	261	2mm x-veneér	3294L	Styrepult	Control desk	Leitstand	Bureau de contrôle
2	262	4mm x-veneér	3289L	Luge	Hatch	Luke	Escoutilles
2	263	2mm x-veneér	3294L	Luge	Hatch	Luke	Escoutilles
1	264	2mm x-veneér	3294L	Luge	Hatch	Luke	Escoutilles
1	265	2mm x-veneér	3294L	Luge	Hatch	Luke	Escoutilles
1	266	4mm x-veneér	3289L	Luge	Hatch	Luke	Escoutilles
4	267	4mm x-veneér	3289L	Ankerspil	Anchorwindless	Ankerspill	Guindeau
2	268	1mm x-veneér	3295L	Ankerspil	Anchorwindless	Ankerspill	Guindeau
2	269	1mm x-veneér	3295L	Fundament	Base	Fundament	Fondement
1	270	2mm x-veneér	3293L	Kofilnaglebænk	Belaying pin bench	Belegnägelbank	Ratelier de cordage
3	271	1mm x-veneér	3295L	Lanternebræt	For light	Laternenfuss	Pour feux de navigation
3	272	2mm x-veneér	3293L	Kran	Crane	Kran	Grue
6	273	2mm x-veneér	3293L	Kran	Crane	Kran	Grue
3	274	2mm x-veneér	3293L	Kran	Crane	Kran	Grue
6	275	2mm x-veneér	3293L	Kran	Crane	Kran	Grue
6	276	2mm x-veneér	3291L	Kran	Crane	Kran	Grue
3	277	2mm x-veneér	3291L	Kran	Crane	Kran	Grue
3	278	2mm x-veneér	3291L	Kran	Crane	Kran	Grue
3	279	2mm x-veneér	3291L	Kran	Crane	Kran	Grue
6	280	2mm x-veneér	3294L	Kran	Crane	Kran	Grue

2	281	5mm x-veneér	3288L	Styrepult	Control desk	Leitstand	Bureau de contrôle
2	282	1mm x-veneér	3295L	Dyser, stævn	Bow, nozzels	Düsen, Vorsteven	Turbine d'hélice arriér
1	283	2mm x-veneér	3291L	Anvendes ikke	Not used	Nicht benutzt	Non utilisé
1	284	2mm x-veneér	3291L	Anvendes ikke	Not used	Nicht benutzt	Non utilisé
3	285	0,7x1x450mm	Annegre	Liste	Strip	Leiste	Baguette
2	286	0,7x2x550mm	Annegre	Liste	Strip	Leiste	Baguette
4	287	0,7x3x550mm	Annegre	Liste	Strip	Leiste	Baguette
1	288	2x2x550mm	Obechi	Liste	Strip	Leiste	Baguette
6	289	2x3x550mm	Obechi	Liste	Strip	Leiste	Baguette
12	290	2x5x550mm	Obechi	Liste	Strip	Leiste	Baguette
49	291	2x8x550mm	Obechi	Beklædningsliste	Strip for planking	Leiste f. Beplankung	Baguette p.bordage
1	292	3x4x300mm	Obechi	Liste	Strip	Leiste	Baguette
5	293	3x5x600mm	Obechi	Fender	Rubbing strakes	Scheuerleisten	Défence
2	294	3x8x700mm	Obechi	Fender	Rubbing strakes	Scheuerleisten	Défence
1	295	5x5x700mm	Obechi	Liste	Strip	Leiste	Baguette
3	296	ø4x260mm	Basswood	Rundstok	Round stick	Rundstab	Baguette ronde
1	297	ø6x250mm	Basswood	Rundstok	Round stick	Rundstab	Baguette ronde
1	298	ø10x32mm	Basswood	Rundstok	Round stick	Rundstab	Baguette ronde
1	299	ø12x120mm	Basswood	Rundstok	Round stick	Rundstab	Baguette ronde
1	300	ø16x170mm	Basswood	Rundstok	Round stick	Rundstab	Baguette ronde
4	301	1mm x-veneér	3295L	Spilkop	Warping end	Spillkopf	Tambour
2	302	ø8x9mm	Basswood	Rundstok	Round stick	Rundstab	Baguette ronde
1		TR 155		Transfer	Transfer	Abziehbilder	Décalsmanies
1		A4		Byggevejledning	Building instr.	Bauanleitung	Instr. de montage
1		720x1020mm		Tegning	Plans	Zeichnung	Plan
1		50x200mm		Acetat	Acetate	Azetat	Rhodoid

Table contents for fittingkit "Smit Rotterdam

Pcs.	No.	Dimension		DK	GB	D	F
5	F22A	0,5mm	Copper	Kobbertråd	Copperthread	Kupferdraht	Fils de cuivre
3	F37	35mm	Plastic	Anker	Anchor	Anker	Ancre
11	F39	ø1x250mm	Brass	Messingtråd	Brasswire	Messingdraht	Fils de laiton
1	F39/10	ø1x100mm	Brass	Messingtråd	Brasswire	Messingdraht	Fils de laiton
3	F46	ø10mm	Brass	Kapstan	Capstan	Kapstan	Cabestan
1	F52	20mm	Plastic	Kompas	Compass	Kompas	Compass
1	F56	ø5mm	Brass	Klokke	Bell	Glocke	Cloche

1	F59	20mm	Wood	Kompas	Compass	Kompas	Compass
2	F65	ø8mm	Brass	Koøje	Portlights	Bullaugen	Hublot
14	F66	ø6mm	Plastic	Koøje	Portlights	Bullaugen	Hublot
7	F67	ø4mm	Plastic	Koøje	Portlights	Bullaugen	Hublot
1	F70	10m		Rigningstråd	Riggingthread	Takelgarn	Fil de greement
1	F71	3m		Rigningstråd	Riggingthread	Takelgarn	Fil de greement
1	F73	3m		Rigningstråd	Riggingthread	Takelgarn	Fil de greement
1	F74	30cm		Rigningstråd	Riggingthread	Takelgarn	Fil de greement
1	F76	32cm	Brass	Kæde	Chain	Kette	Chaine
5	F100	ø4mm	Brass	Lanterne	Lights	Lanternen	Feux de navigation
16	F112	ø5mm	Brass	Pullert	Bollard	Poller	Bitte d'amarrage
1	F121	ø5mm	Brass	Lanterne	Lights	Lanternen	Feux de navigation
8	F136	12x12mm	Plastic	Redningsbælte	Lifebelts	Rettungsringe	Bouée
2	F141	21mm	Brass	Projektør	Searchlight	Scheinwerfer	Projecteur
1	F142	12mm	Brass	Sirene	Siren	Sirene	Siréne
2	F144	10mm	Brass	Rulle	Pulley	Rollen	Poulies
212	F145	14mm	Aluminum	Gelænderstøtte	Railstanchion	Relingsstützen	Chandeliers
1	F149	27mm	Brass	Radar	Radar receiver	Radar	Radar
1	F153	15,5mm	Brass	Wirerulle	Pulley	Wire rolle	Poulie
5	F181	55mm	Plastic	Lejder	Ladder	Leiter	Echelle
7	F187	20mm	Brass	Røstjern	Chainplates	Rüsteisen	Cadénes
11	F230	8mm	Brass	Søm	Brassbrads	Messingnägel	Clou de laiton
2	F233-1	95mm	Plastic	Redningsbåd	Life boat	Rettungsboot	Chaloupe ponté
2	F233-2	88mm	Plastic	Redningsbåd	Life boat	Rettungsboot	Chaloupe ponté
2	F233-3	1mm x-veneér	3295L	Redningsbåd	Life boat	Rettungsboot	Chaloupe ponté
51	F285	6mm	Brass	Øjebolt	Eye bolts	Augenbolzen	Pitons
17	F291	ø5mm	Brass	Wirerulle	Pulley	Wirerulle	Poulies
4	F298	7mm	Brass	Gelænderstøtte	Railstanchion	Relingsstützen	Chandeliers
4	F330	ø1x10mm	Brass	Søm	Brassbrads	Messingnägel	Clou de laiton
1	F376	ø8mm	Brass	Rulle	Pulley	Rollen	Poulie
16	F378	ø4mm	Brass	Messingskive	Brass plates	Messingscheiben	Disque de laiton
2	F392	22mm	Brass	Skrueaksel	Propeller shaft	Stevenroller	Abre porte
2	F406	M2mm		Maskinskrue	Screw	Schraube	Cheville
4	F410	ø2x250mm	Brass	Messingtråd	Brasswire	Messingdraht	Fils de laiton
2	F417	16mm	Brass	Motor	Engine	Motor	Moteur
1	F472	50mm	Brass	Radar	Radar reciever	Radar	Radar

1	F473	50mm	Brass	Radiopejler	Wireless direction	Peilrahmen	Antenne Gonio
2	F475	22x5x32mm	Plastic	Skrueaksel, holder	Propellershaft cons	Stevenrohr stütze	Chaise arbre d'hélice
2	F476	93mm	Brass	Rorstamme	Rudder stock	Ruderstamm	Arbre étambot de
2	F477	85x72x36mm	Plastic	Dyser	Nozzels	Düsen	Turbine d'hélice
3	F478	33mm	Brass	Vandkanon	Watercannon	Wasserkanone	Canon d'eau
1	F479R	50mm	Plastic	Skrue	Propeller	Schiffsschraube	Hélice
1	F479L	50mm	Plastic	Skrue	Propeller	Schiffsschraube	Hélice
16	F481	ø4mm	Brass	Pullert	Bollard	Poller	Bitte d'armarrage
3	F482	11,5mm	Brass	Motor	Engine	Motor	Moteur
1	F484	M2mm		Træskrue	Screw	Schraube	Cheville
6	F485	ø5x3mm	Brass	Ring	Ring	Ring	Bague
1	F486-1	ø2x50mm	Brass	Mast	Mast	Mast	Mât
1	F486-2	ø3x62mm	Brass	Mast	Mast	Mast	Mât
1	F486-3	ø4x74mm	Brass	Mast	Mast	Mast	Mât
19	F664	ø0,5x11mm	Copper	Øjebolt	Eye bolt	Augenbolzen	Pitons
2	F675	ø15x12mm	Brass	Wirerulle	Pulley	Wire rolle	Poulie
1	F998	ø5x130mm	Brass	Messingrør	Brass pipes	Messingrohr	Tuyaux en laiton

Table contents for "SMIT ROTTERDAM" Art. No. 478

Pcs.	No.	Dimension	Material	NL	E	I	P
1	1	5mm x-veneér	3287L	Kiel	Quilla	Chiglia	Quilha
1	2	5mm x-veneér	3287L	Kiel	Quilla	Chiglia	Quilha
1	3	5mm x-veneér	3287L	Kiel	Quilla	Chiglia	Quilha
1	4	5mm x-veneér	3288L	Spant	Cuaderna	Ordinata	Armacao
1	5	5mm x-veneér	3287L	Spant	Cuaderna	Ordinata	Armacao
1	6	5mm x-veneér	3288L	Spant	Cuaderna	Ordinata	Armacao
1	7	5mm x-veneér	3288L	Spant	Cuaderna	Ordinata	Armacao
1	8	5mm x-veneér	3288L	Spant	Cuaderna	Ordinata	Armacao
1	9	5mm x-veneér	3288L	Spant	Cuaderna	Ordinata	Armacao
1	10	5mm x-veneér	3288L	Spant	Cuaderna	Ordinata	Armacao
1	11	5mm x-veneér	3288L	Spant	Cuaderna	Ordinata	Armacao
1	12	5mm x-veneér	3288L	Spant	Cuaderna	Ordinata	Armacao
1	13	5mm x-veneér	3288L	Spant	Cuaderna	Ordinata	Armacao
1	14	5mm x-veneér	3288L	Spant	Cuaderna	Ordinata	Armacao
1	15	5mm x-veneér	3288L	Spant	Cuaderna	Ordinata	Armacao
1	16	5mm x-veneér	3287L	Spant	Cuaderna	Ordinata	Armacao

1	17	5mm x-veneér	3288L	Spant	Cuaderna	Ordinata	Armacao
1	18	5mm x-veneér	3288L	Spant	Cuaderna	Ordinata	Armacao
1	19	5mm x-veneér	3288L	Versterkenen	Refuerzo	Rinforzo	Reforço
1	20	5mm x-veneér	3288L	Spantdelen	Curvatón	Trave superiore	Viga superior
1	21	5mm x-veneér	3287L	Spantdelen	Curvatón	Trave superiore	Viga superior
1	22	5mm x-veneér	3288L	Spantdelen	Curvatón	Trave superiore	Viga superior
1	23	5mm x-veneér	3288L	Spantdelen	Curvatón	Trave superiore	Viga superior
1	24	5mm x-veneér	3287L	Spantdelen	Curvatón	Trave superiore	Viga superior
2	25	5mm x-veneér	3287L	Versterkenen	Refuerzo	Rinforzo	Reforço
1	26	5mm x-veneér	3288L	Spantdelen	Curvatón	Trave superiore	Viga superior
1	27	5mm x-veneér	3288L	Spantdelen	Curvatón	Trave superiore	Viga superior
2	28	5mm x-veneér	3288L	Versterkenen	Refuerzo	Rinforzo	Reforço
2	29	4mm x-veneér	3289L	Versterkenen	Refuerzo	Rinforzo	Reforço
1	30	4mm x-veneér	3289L	Versterkenen	Refuerzo	Rinforzo	Reforço
2	31	2mm x-veneér	3292L	Dek	Cubierta	Ponte	Convés
1	32	2mm x-veneér	3293L	Schot	Manparo	Paratia	Parede
2	33	2mm x-veneér	3293L	Schot	Manparo	Paratia	Parede
1	34	2mm x-veneér	3293L	Schot	Manparo	Paratia	Parede
1	35	2mm x-veneér	3293L	Schot	Manparo	Paratia	Parede
1	36	2mm x-veneér	3291L	Schot	Manparo	Paratia	Parede
2	37	2mm x-veneér	3293L	Schot	Manparo	Paratia	Parede
3	38	2mm x-veneér	3294L	Deur	Puerta	Portelle	Porta
2	39	2mm x-veneér	3294L	Deur	Puerta	Portelle	Porta
6	40	4mm x-veneér	3289L	Schot	Manparo	Paratia	Parede
6	41	4mm x-veneér	3289L	Schot	Manparo	Paratia	Parede
1	42	2mm x-veneér	3292L	Dek	Cubierta	Ponte	Convés
1	43	2mm x-veneér	3292L	Dek	Cubierta	Ponte	Convés
1	44	2mm x-veneér	3292L	Schot	Manparo	Paratia	Parede
2	45	2mm x-veneér	3292L	Kajuit	Camarote	Cabina	Cabine
1	46	2mm x-veneér	3292L	Kajuit	Camarote	Cabina	Cabine
1	47	2mm x-veneér	3292L	Kajuit	Camarote	Cabina	Cabine
4	48	2mm x-veneér	3293L	Kajuit	Camarote	Cabina	Cabine
2	49	2mm x-veneér	3291L	Kajuit	Camarote	Cabina	Cabine
1	50	2mm x-veneér	3293L	Kajuit	Camarote	Cabina	Cabine
1	51	2mm x-veneér	3293L	Kajuit	Camarote	Cabina	Cabine

2	52	2mm x-veneér	3293L	Kajuit	Camarote	Cabina	Cabine
2	53	2mm x-veneér	3293L	Kajuit	Camarote	Cabina	Cabine
2	54	2mm x-veneér	3293L	Kajuit	Camarote	Cabina	Cabine
1	55	2mm x-veneér	3293L	Kajuit	Camarote	Cabina	Cabine
1	56	2mm x-veneér	3293L	Kajuit	Camarote	Cabina	Cabine
1	57	2mm x-veneér	3293L	Kajuit	Camarote	Cabina	Cabine
5	58	2mm x-veneér	3291L	Deur	Puerta	Portelle	Porta
2	59	2mm x-veneér	3291L	Deur	Puerta	Portelle	Porta
1	60	4mm x-veneér	3289L	Kajuit	Camarote	Cabina	Cabine
1	61	2mm x-veneér	3293L	Luiken	Escoutilla	Boccaporto	Escotilha
4	62	4mm x-veneér	3289L	Controle bureau	Gruá de control	Controllo scrivania	Controlo documental
2	63	2mm x-veneér	3291L	Dek	Cubierta	Ponte	Convés
2	64	2mm x-veneér	3293L	Rompbekleding	Listónes de forro	Listelli fasciame	Tiras
2	65	2mm x-veneér	3294L	Rompbekleding	Listónes de forro	Listelli fasciame	Tiras
2	66	5mm x-veneér	3288L	Straalbuizen, Voorst.	Boquillas	Bocchettoni; ruota di prua	Bocais, proa
4	67	5mm x-veneér	3287L	Straalbuizen, Voorst.	Boquillas	Bocchettoni; ruota di prua	Bocais, proa
2	68	2mm x-veneér	3294L	Rompbekleding	Listónes de forro	Listelli fasciame	Tiras
2	69	4mm x-veneér	3289L	Straalbuizen, Voorst.	Boquillas	Bocchettoni; ruota di prua	Bocais, proa
2	70	2mm x-veneér	3291L	Rompbekleding	Listónes de forro	Listelli fasciame	Tiras
1	71	18x25x255mm	Balsa	Blokken, voorsteven	Taco, roda delantera	Blocco, dritto di poppa	Bloco, proa
2	72	2mm x-veneér	3294L	Rompbekleding	Listónes de forro	Listelli fasciame	Tiras
2	74	2mm x-veneér	3294L	Rompbekleding	Listónes de forro	Listelli fasciame	Tiras
18	75	5mm x-veneér	3288L	Konsole	Consola	Consolle	Console
2	76	5mm x-veneér	3288L	Konsole	Consola	Consolle	Console
2	77	5mm x-veneér	3287L	Konsole	Consola	Consolle	Console
1	78	4mm x-veneér	3289L	Motor console	Soporto de Motor	Base del motore	Console do motor
2	79	3mm x-veneér	3290L	Boden-plaat	Placa de fondo	Base per bitta	Caixa da bateria
2	80	3mm x-veneér	3290L	Versterkenen	Refuerzo	Rinforzo	Reforço
4	81	4mm x-veneér	3289L	Versterkenen	Refuerzo	Rinforzo	Reforço
4	82	4mm x-veneér	3289L	Versterkenen	Refuerzo	Rinforzo	Reforço
4	83	4mm x-veneér	3289L	Versterkenen	Refuerzo	Rinforzo	Reforço
4	84	4mm x-veneér	3289L	Versterkenen	Refuerzo	Rinforzo	Reforço
2	85	4mm x-veneér	3289L	Sleepsteunen	Chancho de soporto	Supporto da rimorchiatore	Guincho/suporte
2	86	4mm x-veneér	3289L	Sleepsteunen	Chancho de soporto	Supporto da rimorchiatore	Guincho/suporte
2	87	4mm x-veneér	3289L	Sleepsteunen	Chancho de soporto	Supporto da rimorchiatore	Guincho/suporte

2	88	4mm x-veneér	3289L	Sleepsteunen	Chancho de soporto	Supporto da rimorchiatore	Guincho/suporte
2	89	1mm x-veneér	3295L	Rompbekleding	Listónes de forro	Listelli fasciame	Tiras
2	90	2mm x-veneér	3294L	Versterkenen	Refuerzo	Rinforzo	Reforço
2	91	2mm x-veneér	3294L	Versterkenen	Refuerzo	Rinforzo	Reforço
2	92	2mm x-veneér	3294L	Versterkenen	Refuerzo	Rinforzo	Reforço
2	93	2mm x-veneér	3294L	Versterkenen	Refuerzo	Rinforzo	Reforço
2	94	2mm x-veneér	3292L	Reling	Borda	Parapetto	Topo da amurada
14	95	2mm x-veneér	3293L	Versterkenen	Refuerzo	Rinforzo	Reforço
2	96	2mm x-veneér	3293L	Versterkenen	Refuerzo	Rinforzo	Reforço
1	97	1mm x-veneér	3295L	Rompbekleding	Listónes de forro	Listelli fasciame	Tiras
6	98	2mm x-veneér	3293L	Versterkenen	Refuerzo	Rinforzo	Reforço
2	99	2mm x-veneér	3293L	Fundament	Soporto	Fondamento	Base
2	100	2mm x-veneér	3293L	Versterkenen	Refuerzo	Rinforzo	Reforço
1	101	1mm x-veneér	3295L	Potdeksel	Liston de barrandilla	Parapetto	Tira da amurada
2	102	1mm x-veneér	3295L	Potdeksel	Liston de barrandilla	Parapetto	Tira da amurada
2	103	3mm x-veneér	3290L	Vulstukken	Trozo de ayuda	Pezzo ausiliario	Peças auxiliares
1	104	5mm x-veneér	3288L	Vulstukken	Trozo de ayuda	Pezzo ausiliario	Peças auxiliares
2	105	4mm x-veneér	3289L	Roer	Timón	Timone	Leme
1	106	2mm x-veneér	3292L	Opbouw machinek.	Lumbrera	Vano macchina	Casa de máquinas
1	107	2mm x-veneér	3292L	Opbouw machinek.	Lumbrera	Vano macchina	Casa de máquinas
1	108	2mm x-veneér	3292L	Opbouw machinek.	Lumbrera	Vano macchina	Casa de máquinas
1	109	2mm x-veneér	3294L	Opbouw machinek.	Lumbrera	Vano macchina	Casa de máquinas
1	110	2mm x-veneér	3292L	Opbouw machinek.	Lumbrera	Vano macchina	Casa de máquinas
1	111	2mm x-veneér	3293L	Opbouw machinek.	Lumbrera	Vano macchina	Casa de máquinas
1	112	2mm x-veneér	3293L	Opbouw machinek.	Lumbrera	Vano macchina	Casa de máquinas
1	113	2mm x-veneér	3291L	Opbouw machinek.	Lumbrera	Vano macchina	Casa de máquinas
2	114	2mm x-veneér	3291L	Opbouw machinek.	Lumbrera	Vano macchina	Casa de máquinas
2	115	2mm x-veneér	3294L	Opbouw machinek.	Lumbrera	Vano macchina	Casa de máquinas
18	117	5mm x-veneér	3287L	Opbouw machinek.	Lumbrera	Vano macchina	Casa de máquinas
1	118	2mm x-veneér	3294L	Luiken	Escoutilla	Boccaporto	Escotilha
2	119	3mm x-veneér	3290L	Strip	Liston	Listello	Tira
1	120	3mm x-veneér	3290L	Strip	Liston	Listello	Tira
2	121	2mm x-veneér	3293L	Campagne	Bajada	Scaletta boccaporto	Escotilha avançada
2	122	2mm x-veneér	3293L	Campagne	Bajada	Scaletta boccaporto	Escotilha avançada
2	123	2mm x-veneér	3294L	Standaard	Grada	Supporto	Pé do Suporte de Casco

2	124	2mm x-veneér	3294L	Standaard	Grada	Supporto	Pé do Suporte de Casco
1	125	2mm x-veneér	3293L	Kajuit	Camarote	Cabina	Cabine
1	126	2mm x-veneér	3293L	Kajuit	Camarote	Cabina	Cabine
1	127	2mm x-veneér	3293L	Kajuit	Camarote	Cabina	Cabine
2	128	2mm x-veneér	3291L	Kajuit	Camarote	Cabina	Cabine
2	129	2mm x-veneér	3291L	Kajuit	Camarote	Cabina	Cabine
2	130	2mm x-veneér	3293L	Kajuit	Camarote	Cabina	Cabine
2	131	2mm x-veneér	3293L	Kajuit	Camarote	Cabina	Cabine
1	132	2mm x-veneér	3293L	Kajuit	Camarote	Cabina	Cabine
4	133	2mm x-veneér	3291L	Kajuit	Camarote	Cabina	Cabine
2	134	2mm x-veneér	3291L	Kajuit	Camarote	Cabina	Cabine
2	135	2mm x-veneér	3293L	Kajuit	Camarote	Cabina	Cabine
2	136	2mm x-veneér	3293L	Kajuit	Camarote	Cabina	Cabine
1	137	2mm x-veneér	3292L	Kajuit	Camarote	Cabina	Cabine
1	138	4mm x-veneér	3289L	Versterkenen	Refuerzo	Rinforzo	Reforço
2	139	2mm x-veneér	3293L	Dak	Teco	Tetto	Teto
1	140	2mm x-veneér	3291L	Versterkenen	Refuerzo	Rinforzo	Reforço
1	141	2mm x-veneér	3291L	Stuurhuis	Caseta de navegación	Cabina pilotaggio	Frente da cabine superior
2	142	2mm x-veneér	3292L	Stuurhuis	Caseta de navegación	Cabina pilotaggio	Frente da cabine superior
1	143	2mm x-veneér	3293L	Stuurhuis	Caseta de navegación	Cabina pilotaggio	Frente da cabine superior
1	144	2mm x-veneér	3292L	Stuurhuis	Caseta de navegación	Cabina pilotaggio	Frente da cabine superior
2	145	2mm x-veneér	3291L	Stuurhuis	Caseta de navegación	Cabina pilotaggio	Frente da cabine superior
1	146	2mm x-veneér	3292L	Stuurhuis	Caseta de navegación	Cabina pilotaggio	Frente da cabine superior
2	147	2mm x-veneér	3292L	Stuurhuis	Caseta de navegación	Cabina pilotaggio	Frente da cabine superior
2	148	2mm x-veneér	3291L	Stuurhuis	Caseta de navegación	Cabina pilotaggio	Frente da cabine superior
2	149	2mm x-veneér	3292L	Stuurhuis	Caseta de navegación	Cabina pilotaggio	Frente da cabine superior
2	150	2mm x-veneér	3292L	Stuurhuis	Caseta de navegación	Cabina pilotaggio	Frente da cabine superior
2	151	2mm x-veneér	3292L	Stuurhuis	Caseta de navegación	Cabina pilotaggio	Frente da cabine superior
1	152	2mm x-veneér	3293L	Stuurhuis	Caseta de navegación	Cabina pilotaggio	Frente da cabine superior
2	153	2mm x-veneér	3291L	Stuurhuis	Caseta de navegación	Cabina pilotaggio	Frente da cabine superior
2	154	2mm x-veneér	3294L	Stuurhuis	Caseta de navegación	Cabina pilotaggio	Frente da cabine superior
2	155	2mm x-veneér	3294L	Stuurhuis	Caseta de navegación	Cabina pilotaggio	Frente da cabine superior
2	156	2mm x-veneér	3294L	Stuurhuis	Caseta de navegación	Cabina pilotaggio	Frente da cabine superior
1	157	2mm x-veneér	3294L	Controle bureau	Gruá de control	Controllo scrivania	Controlo documental
1	158	2mm x-veneér	3292L	Controle bureau	Gruá de control	Controllo scrivania	Controlo documental

2	159	2mm x-veneér	3294L	Controle bureau	Gruá de control	Controllo scrivania	Controlo documental
2	160	2mm x-veneér	3294L	Controle bureau	Gruá de control	Controllo scrivania	Controlo documental
1	161	2mm x-veneér	3294L	Kist	Caja	Cassa	Baú
1	162	2mm x-veneér	3294L	Kist	Caja	Cassa	Baú
1	163	2mm x-veneér	3294L	Kist	Caja	Cassa	Baú
2	164	2mm x-veneér	3291L	Bank	Banco	Panca	Banco
1	165	2mm x-veneér	3294L	Bank	Banco	Panca	Banco
1	166	2mm x-veneér	3294L	Bank	Banco	Panca	Banco
1	167	2mm x-veneér	3294L	Kist	Caja	Cassa	Baú
2	168	2mm x-veneér	3294L	Kist	Caja	Cassa	Baú
1	169	2mm x-veneér	3294L	Kist	Caja	Cassa	Baú
2	170	1mm x-veneér	3295L	Trap/leuning	Escalera/pasamanos	Ponte/corrimano	Escada/corrimão
1	171	2mm x-veneér	3291L	Controle bureau	Gruá de control	Controllo scrivania	Controlo documental
2	172	2mm x-veneér	3291L	Controle bureau	Gruá de control	Controllo scrivania	Controlo documental
1	173	2mm x-veneér	3291L	Controle bureau	Gruá de control	Controllo scrivania	Controlo documental
1	174	2mm x-veneér	3291L	Controle bureau	Gruá de control	Controllo scrivania	Controlo documental
1	175	2mm x-veneér	3291L	Controle bureau	Gruá de control	Controllo scrivania	Controlo documental
1	176	2mm x-veneér	3291L	Controle bureau	Gruá de control	Controllo scrivania	Controlo documental
1	177	2mm x-veneér	3292L	Dak	Teco	Tetto	Teto
2	178	2mm x-veneér	3291L	Stuurhuis	Caseta de navegación	Cabina pilotaggio	Frente da cabine superior
1	179	2mm x-veneér	3291L	Stuurhuis	Caseta de navegación	Cabina pilotaggio	Frente da cabine superior
2	180	2mm x-veneér	3291L	Strip	Liston	Listello	Tira
1	181	2mm x-veneér	3291L	Strip	Liston	Listello	Tira
2	182	2mm x-veneér	3291L	Strip	Liston	Listello	Tira
1	183	2mm x-veneér	3293L	Strip	Liston	Listello	Tira
1	184	2mm x-veneér	3292L	Luiken	Escoutilla	Boccaporto	Escotilha
1	185	2mm x-veneér	3293L	Kist	Caja	Cassa	Baú
2	186	2mm x-veneér	3293L	Kist	Caja	Cassa	Baú
1	187	2mm x-veneér	3293L	Kist	Caja	Cassa	Baú
1	188	2mm x-veneér	3293L	Kist	Caja	Cassa	Baú
1	189	2mm x-veneér	3293L	Kist	Caja	Cassa	Baú
13	190	2mm x-veneér	3294L	Konsole	Consola	Consolle	Console
1	191	2mm x-veneér	3293L	Platform	Plataforma	Piattaforma	Plataforma
1	192	2mm x-veneér	3293L	Platform	Plataforma	Piattaforma	Plataforma
1	193	2mm x-veneér	3293L	Platform	Plataforma	Piattaforma	Plataforma

1	194	2mm x-veneér	3293L	Platform	Plataforma	Piattaforma	Plataforma
1	195	2mm x-veneér	3292L	Strip	Liston	Listello	Tira
2	196	2mm x-veneér	3292L	Strip	Liston	Listello	Tira
2	197	2mm x-veneér	3292L	Strip	Liston	Listello	Tira
2	198	2mm x-veneér	3292L	Strip	Liston	Listello	Tira
1	199	2mm x-veneér	3293L	Zonneklep	Sombrilla	Parasole	Quebra-sol da cabine superior
2	200	2mm x-veneér	3292L	Zonneklep	Sombrilla	Parasole	Quebra-sol da cabine superior
1	201	2mm x-veneér	3291L	Strip	Liston	Listello	Tira
2	202	2mm x-veneér	3291L	Strip	Liston	Listello	Tira
2	203	2mm x-veneér	3293L	Schoorsteen	Chimenea	Camino	Chaminé
2	204	2mm x-veneér	3293L	Schoorsteen	Chimenea	Camino	Chaminé
2	205	2mm x-veneér	3293L	Schoorsteen	Chimenea	Camino	Chaminé
2	206	2mm x-veneér	3293L	Schoorsteen	Chimenea	Camino	Chaminé
2	207	2mm x-veneér	3293L	Schoorsteen	Chimenea	Camino	Chaminé
2	208	2mm x-veneér	3293L	Schoorsteen	Chimenea	Camino	Chaminé
8	209	1mm x-veneér	3295L	Schoorsteen	Chimenea	Camino	Chaminé
2	210	2mm x-veneér	3291L	Radar toren	Torre de radar	Torre radar	Radar torre
1	211	2mm x-veneér	3291L	Radar toren	Torre de radar	Torre radar	Radar torre
1	212	1mm x-veneér	3295L	Ladder	Escala	Scaletta	Escada
2	213	2mm x-veneér	3291L	Radar toren	Torre de radar	Torre radar	Radar torre
1	214	2mm x-veneér	3292L	Radar toren	Torre de radar	Torre radar	Radar torre
1	215	2mm x-veneér	3292L	Radar toren	Torre de radar	Torre radar	Radar torre
1	216	2mm x-veneér	3292L	Radar toren	Torre de radar	Torre radar	Radar torre
2	217	2mm x-veneér	3292L	Radar toren	Torre de radar	Torre radar	Radar torre
1	218	2mm x-veneér	3292L	Radar toren	Torre de radar	Torre radar	Radar torre
2	219	2mm x-veneér	3292L	Radar toren	Torre de radar	Torre radar	Radar torre
2	220	2mm x-veneér	3292L	Radar toren	Torre de radar	Torre radar	Radar torre
1	221	2mm x-veneér	3292L	Radar toren	Torre de radar	Torre radar	Radar torre
1	222	2mm x-veneér	3292L	Radar toren	Torre de radar	Torre radar	Radar torre
2	223	2mm x-veneér	3292L	Radar toren	Torre de radar	Torre radar	Radar torre
2	224	2mm x-veneér	3294L	Stuurhuis	Garita del timonel	Cabina di pilotaggio	Cabine
4	225	4mm x-veneér	3289L	Reddingsvolt	Balsa salvavida	Zattera di salvataggio	Barco salva-vidas
8	226	4mm x-veneér	3289L	Reddingsvolt	Balsa salvavida	Zattera di salvataggio	Barco salva-vidas
12	227	2mm x-veneér	3293L	Reddingsvolt	Balsa salvavida	Zattera di salvataggio	Barco salva-vidas
8	228	1mm x-veneér	3295L	Reddingsvolt	Balsa salvavida	Zattera di salvataggio	Barco salva-vidas

2	229	2mm x-veneér	3292L	Deur	Puerta	Portelle	Porta
2	230	4mm x-veneér	3289L	Verhaalklamp	Bocina	Rinforzo	Buzina
2	231	2mm x-veneér	3294L	Controle bureau	Gruá de control	Controllo scrivania	Controlo documental
4	232	2mm x-veneér	3294L	Controle bureau	Gruá de control	Controllo scrivania	Controlo documental
2	233	2mm x-veneér	3294L	Controle bureau	Gruá de control	Controllo scrivania	Controlo documental
2	234	2mm x-veneér	3291L	Deur	Puerta	Portelle	Porta
1	235	4mm x-veneér	3289L	Bolder-fundament	Bitones-placa de fondo	Base del bitta	Poste de amarração/base
2	236	1mm x-veneér	3295L	Winch	Chigre	Argano	Guincho
2	237	1mm x-veneér	3295L	Winch	Chigre	Argano	Guincho
2	238	1mm x-veneér	3295L	Winch	Chigre	Argano	Guincho
2	239	4mm x-veneér	3289L	Winch	Chigre	Argano	Guincho
1	240	2mm x-veneér	3294L	Bolder	Bitones	Bitta	Poste de amarração
2	241	1mm x-veneér	3295L	Bolder	Bitones	Bitta	Poste de amarração
2	242	4mm x-veneér	3289L	Bolder	Bitones	Bitta	Poste de amarração
4	243	1mm x-veneér	3295L	Bolder	Bitones	Bitta	Poste de amarração
8	244	1mm x-veneér	3295L	Bolder-fundament	Bitones-placa de fondo	Base del bitta	Poste de amarração/base
2	245	3mm x-veneér	3290L	Winch	Chigre	Argano	Guincho
2	246	3mm x-veneér	3290L	Winch	Chigre	Argano	Guincho
2	247	2mm x-veneér	3294L	Winch	Chigre	Argano	Guincho
2	248	2mm x-veneér	3294L	Luiken	Escoutilla	Boccaporto	Escotilha
2	249	4mm x-veneér	3289L	Luiken	Escoutilla	Boccaporto	Escotilha
2	250	2mm x-veneér	3293L	Rubberboot	Embarcación neumática	Gommone	Barco Inflável
1	251	5mm x-veneér	3287L	Rubberboot	Embarcación neumática	Gommone	Barco Inflável
1	252	5mm x-veneér	3287L	Rubberboot	Embarcación neumática	Gommone	Barco Inflável
1	253	2mm x-veneér	3293L	Rubberboot	Embarcación neumática	Gommone	Barco Inflável
1	254	2mm x-veneér	3294L	Controle bureau	Gruá de control	Controllo scrivania	Controlo documental
1	255	2mm x-veneér	3294L	Controle bureau	Gruá de control	Controllo scrivania	Controlo documental
1	256	2mm x-veneér	3294L	Controle bureau	Gruá de control	Controllo scrivania	Controlo documental
1	257	2mm x-veneér	3294L	Controle bureau	Gruá de control	Controllo scrivania	Controlo documental
1	258	2mm x-veneér	3294L	Controle bureau	Gruá de control	Controllo scrivania	Controlo documental
1	259	2mm x-veneér	3294L	Controle bureau	Gruá de control	Controllo scrivania	Controlo documental
1	260	2mm x-veneér	3294L	Controle bureau	Gruá de control	Controllo scrivania	Controlo documental
3	261	2mm x-veneér	3294L	Controle bureau	Gruá de control	Controllo scrivania	Controlo documental
2	262	4mm x-veneér	3289L	Luiken	Escoutilla	Boccaporto	Escotilha
2	263	2mm x-veneér	3294L	Luiken	Escoutilla	Boccaporto	Escotilha

1	264	2mm x-veneér	3294L	Luiken	Escoutilla	Boccaporto	Escotilha
1	265	2mm x-veneér	3294L	Luiken	Escoutilla	Boccaporto	Escotilha
1	266	4mm x-veneér	3289L	Luiken	Escoutilla	Boccaporto	Escotilha
4	267	4mm x-veneér	3289L	Ankerwinch	Chigre de ancla	Argano dell'ancora	guincho da âncora
2	268	1mm x-veneér	3295L	Ankerwinch	Chigre de ancla	Argano dell'ancora	guincho da âncora
2	269	1mm x-veneér	3295L	Fundament	Soporto	Fondamento	Base
1	270	2mm x-veneér	3293L	Nagelbank	Caballetes	Cavaletto	Assento de amarração
3	271	1mm x-veneér	3295L	Voor boordlichten	Pantella de linterna	Per la lanterna di bordo	Luz de navegação
3	272	2mm x-veneér	3293L	Kraan	Gruá	Gru	Guindaste
6	273	2mm x-veneér	3293L	Kraan	Gruá	Gru	Guindaste
3	274	2mm x-veneér	3293L	Kraan	Gruá	Gru	Guindaste
6	275	2mm x-veneér	3293L	Kraan	Gruá	Gru	Guindaste
6	276	2mm x-veneér	3291L	Kraan	Gruá	Gru	Guindaste
3	277	2mm x-veneér	3291L	Kraan	Gruá	Gru	Guindaste
3	278	2mm x-veneér	3291L	Kraan	Gruá	Gru	Guindaste
3	279	2mm x-veneér	3291L	Kraan	Gruá	Gru	Guindaste
6	280	2mm x-veneér	3294L	Kraan	Gruá	Gru	Guindaste
2	281	5mm x-veneér	3288L	Controle bureau	Gruá de control	Controllo scrivania	Controlo documental
2	282	1mm x-veneér	3295L	Straalbuizen, Voorst.	Boquillas	Bocchettoni; ruota di prua	Bocais, proa
1	283	2mm x-veneér	3291L	Niet gebruikt	No utilizado	Non usato	Não usado
1	284	2mm x-veneér	3291L	Niet gebruikt	No utilizado	Non usato	Não usado
3	285	0,7x1x450mm	Annegre	Strip	Liston	Listello	Tira
2	286	0,7x2x550mm	Annegre	Strip	Liston	Listello	Tira
4	287	0,7x3x550mm	Annegre	Strip	Liston	Listello	Tira
1	288	2x2x550mm	Obechi	Strip	Liston	Listello	Tira
6	289	2x3x550mm	Obechi	Strip	Liston	Listello	Tira
12	290	2x5x550mm	Obechi	Strip	Liston	Listello	Tira
49	291	2x8x550mm	Obechi	Strip v. rompbepl.	Liston de forro	Listello per fasciame	Tira de revestimento
1	292	3x4x300mm	Obechi	Strip	Liston	Listello	Tira
5	293	3x5x600mm	Obechi	Berghouten	Como de cojin	Parabordo	Defensa
2	294	3x8x700mm	Obechi	Berghouten	Como de cojin	Parabordo	Defensa
1	295	5x5x700mm	Obechi	Strip	Liston	Listello	Tira
3	296	ø4x260mm	Basswood	Rondhout	Barre reronda	Rondino (listello)	Bastão cilíndrico
1	297	ø6x250mm	Basswood	Rondhout	Barre reronda	Rondino (listello)	Bastão cilíndrico
1	298	ø10x32mm	Basswood	Rondhout	Barre reronda	Rondino (listello)	Bastão cilíndrico

1	299	ø12x120mm	Basswood	Rondhout	Barre reronda	Rondino (listello)	Bastão cilíndrico
1	300	ø16x170mm	Basswood	Rondhout	Barre reronda	Rondino (listello)	Bastão cilíndrico
4	301	1mm x-veneér	3295L	Spilkop	Tambor de cabrestante	Testa argano	Terminal
2	302	ø8x9mm	Basswood	Rondhout	Barre reronda	Rondino (listello)	Bastão cilíndrico
1		TR 155		Transfers	Transfer	Decalcomanie	Decalcomanias
1		A4		Bouwbeschrijving	Instr. de constr.	Istruzioni di montaggio	Instruções de montagem
1		720x1020mm		Tekening	Ilustración	Piani di costruzione	Planta principal
1		50x200mm		Acetaat	Acetata	Acetato	Acetato

Table contents for fittingkit “Smit Rotterdam

Pcs.	No.	Dimension		NL	E	I	P
5	F22A	0,5mm	Copper	Koperdraad	Alambre de cabre	Filo in rame	Linha de cobre
3	F37	35mm	Plastic	Anker	Ancla	Ancora	Âncora
11	F39	ø1x250mm	Brass	Messingdraad	Hilo de laton	Filo in ottone	Fio de latão
1	F39/10	ø1x100mm	Brass	Messingdraad	Hilo de laton	Filo in ottone	Fio de latão
3	F46	ø10mm	Brass	Gangspil	Cabrestante	Argano	Cabrestante
1	F52	20mm	Plastic	Kompass	Brujula	Bussola	Compasso
1	F56	ø5mm	Brass	Scheepsbel	Campanilla	Campana	Sino
1	F59	20mm	Wood	Kompass	Brujula	Bussola	Compasso
2	F65	ø8mm	Brass	Patrijspoort	Potillas	Oblò	Aro de escotilha
14	F66	ø6mm	Plastic	Patrijspoort	Potillas	Oblò	Aro de escotilha
7	F67	ø4mm	Plastic	Patrijspoort	Potillas	Oblò	Aro de escotilha
1	F70	10m		Takelgaren	Hilo de oparejo	Filo per manovre	Linha de cordame
1	F71	3m		Takelgaren	Hilo de oparejo	Filo per manovre	Linha de cordame
1	F73	3m		Takelgaren	Hilo de oparejo	Filo per manovre	Linha de cordame
1	F74	30cm		Takelgaren	Hilo de oparejo	Filo per manovre	Linha de cordame
1	F76	32cm	Brass	Ketting	Cadena	Catena	Corrente
5	F100	ø4mm	Brass	Boordlichten	Linternas	Lanterna di bordo	Luzes
16	F112	ø5mm	Brass	Bolder	Bitones	Bitta	Turco
1	F121	ø5mm	Brass	Boordlichten	Linternas	Lanterna di bordo	Luzes
8	F136	12x12mm	Plastic	Reddingsboei	Cinturones salvavidas	Cintura di salvataggio	Bóia salva-vidas
2	F141	21mm	Brass	Schijnwerper	Foco	Proiettore	Holofote
1	F142	12mm	Brass	Sirene	Sirena	Sirena	Sirene
2	F144	10mm	Brass	Rollen	Rodillos	Pulegge	Roldana
212	F145	14mm	Aluminum	Railingspalen	Soporte de pasamanos	Supporti per corrimano	Pontalete da amurada
1	F149	27mm	Brass	Radar	Radar	Radar	Radar

1	F153	15,5mm	Brass	Katrol	Rodillos para alambre	Argano a fune	Polia
5	F181	55mm	Plastic	Ladder	Escala	Scaletta	Escada
7	F187	20mm	Brass	Puttings	Cadenote	Landra	Fixador do ovém
11	F230	8mm	Brass	Spijkertjes	Clavo	Chiodi	Pino
2	F233-1	95mm	Plastic	Reddingsboot	Bote salvavida	Battello di salvataggio	Barco salva-vidas
2	F233-2	88mm	Plastic	Reddingsboot	Bote salvavida	Battello di salvataggio	Barco salva-vidas
2	F233-3	1mm x-veneér	3295L	Reddingsboot	Bote salvavida	Battello di salvataggio	Barco salva-vidas
51	F285	6mm	Brass	Oogbauten	Pernos de canamo	Bullone ad occhio	Ferrolho
17	F291	ø5mm	Brass	Katrollen	Rodillos para alambre	Argano a fune	Polia
4	F298	7mm	Brass	Railingspalen	Soporte de pasamanos	Supporti per corrimano	Pontalete da amurada
4	F330	ø1x10mm	Brass	Spijkertjes	Clavo	Chiodi	Pino
1	F376	ø8mm	Brass	Schijf	Rodillo	Pulegge	Roldana
16	F378	ø4mm	Brass	Messingbeslag	Discos de laton	Dischi di ottone	Disco de latão
2	F392	22mm	Brass	Schroefas	Je de helice	Albero porta-elica	Eixo da hélice
2	F406	M2mm		Schroef	Tornillo de maquina	Vite	Parafuso
4	F410	ø2x250mm	Brass	Messingdraad	Hilo de laton	Filo in ottone	Fio de latão
2	F417	16mm	Brass	Motor	Motor	Motore	Motor
1	F472	50mm	Brass	Radar	Radar	Radar	Radar
1	F473	50mm	Brass	Radiopeilantenne	Marcador de radios	Antenna radiogoniometrica	Antena direcional
2	F475	22x5x32mm	Plastic	Schroefas met steun	Je de helice, soporto	Supporto albero portaelica	Eixo da hélice, suporte
2	F476	93mm	Brass	Roerkoning	Tronco del timon	Tronco del timone	Suporte do timão
2	F477	85x72x36mm	Plastic	Straalbuizen	Boquillas	Bocchettoni	Bocais
3	F478	33mm	Brass	Waterkanon	Cañones de agua	Cannone acquatico	Canhão de água
1	F479R	50mm	Plastic	Schroet	Hélice	Elica	Hélice
1	F479L	50mm	Plastic	Schroet	Hélice	Elica	Hélice
16	F481	ø4mm	Brass	Bolder	Bitones	Bitta	Turco
3	F482	11,5mm	Brass	Motor	Motor	Motore	Motor
1	F484	M2mm		Schroef	Tornillos para madera	Vite	Parafuso
6	F485	ø5x3mm	Brass	Ring	Argolla	Anello	Anel
1	F486-1	ø2x50mm	Brass	Mast	Palo	Albero	Mastros
1	F486-2	ø3x62mm	Brass	Mast	Palo	Albero	Mastros
1	F486-3	ø4x74mm	Brass	Mast	Palo	Albero	Mastros
19	F664	ø0,5x11mm	Copper	Oogbauten	Pernos de cáncamo	Bullone ad occhio	Ferrolho
2	F675	ø15x12mm	Brass	Katrol	Rodillos para alambre	Argano a fune	Polia
1	F998	ø5x130mm	Brass	Messingbeslag	Tubo de laton	Tubo in ottone	Tubos de latão

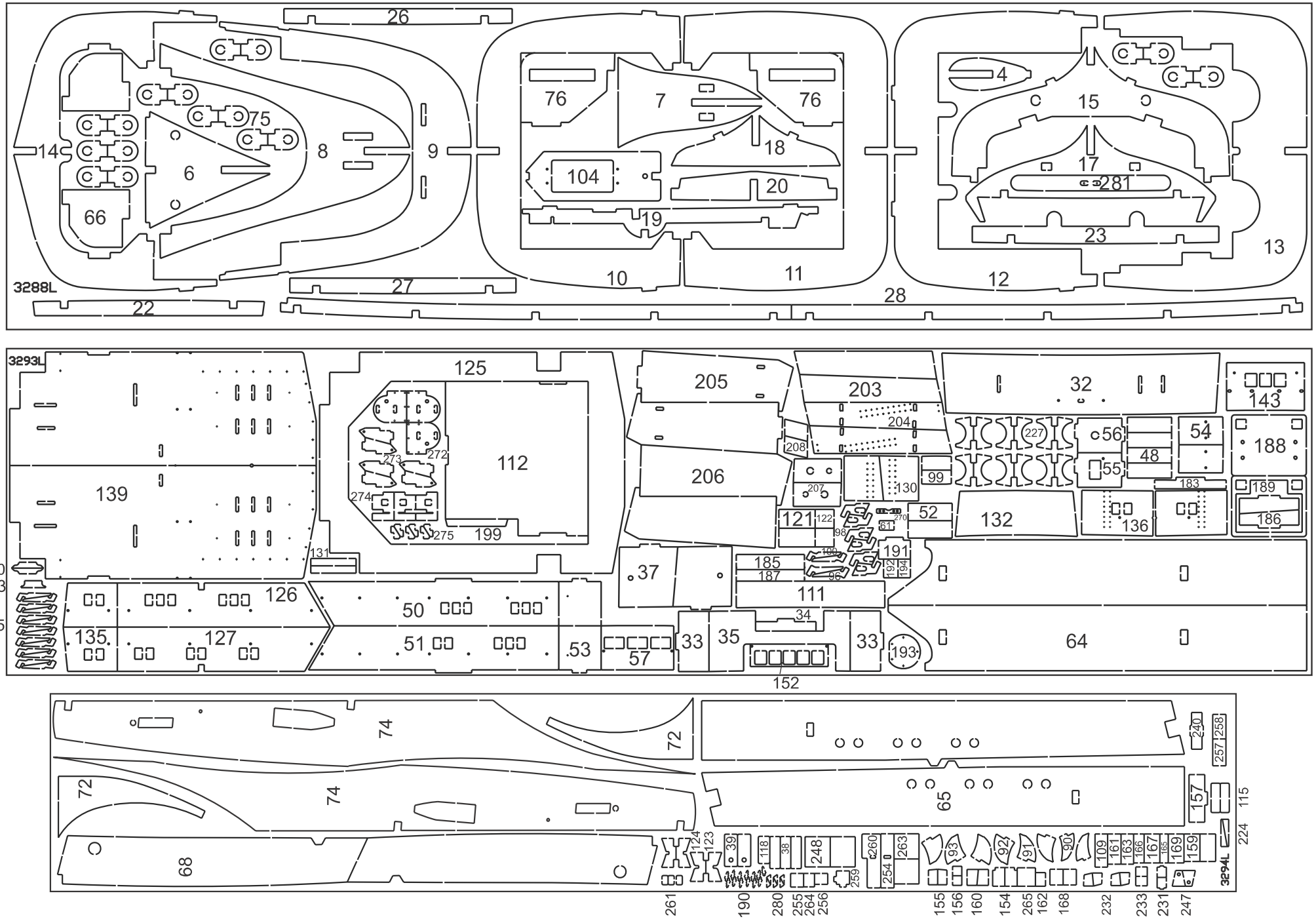
3288L
3293L
3294L
26
14
75
8
9
6
66
76
7
76
18
104
20
19
10
11
4
15
17
281
23
13
12
27
22
28
125
112
273
272
274
275
199
131
205
203
204
208
206
207
130
99
121
122
52
61
270
98
191
192
194
185
187
96
111
34
37
33
35
33
193
152
32
143
227
56
54
48
55
188
183
189
186
132
136
139
250
253
95
126
135
127
50
51
53
57
64
74
72
68
65
157
240
257
258
115
224
124
123
39
118
38
248
259
260
254
263
93
92
91
90
109
161
163
166
167
165
169
159
261
190
280
255
264
256
155
156
160
154
265
162
168
232
233
231
247

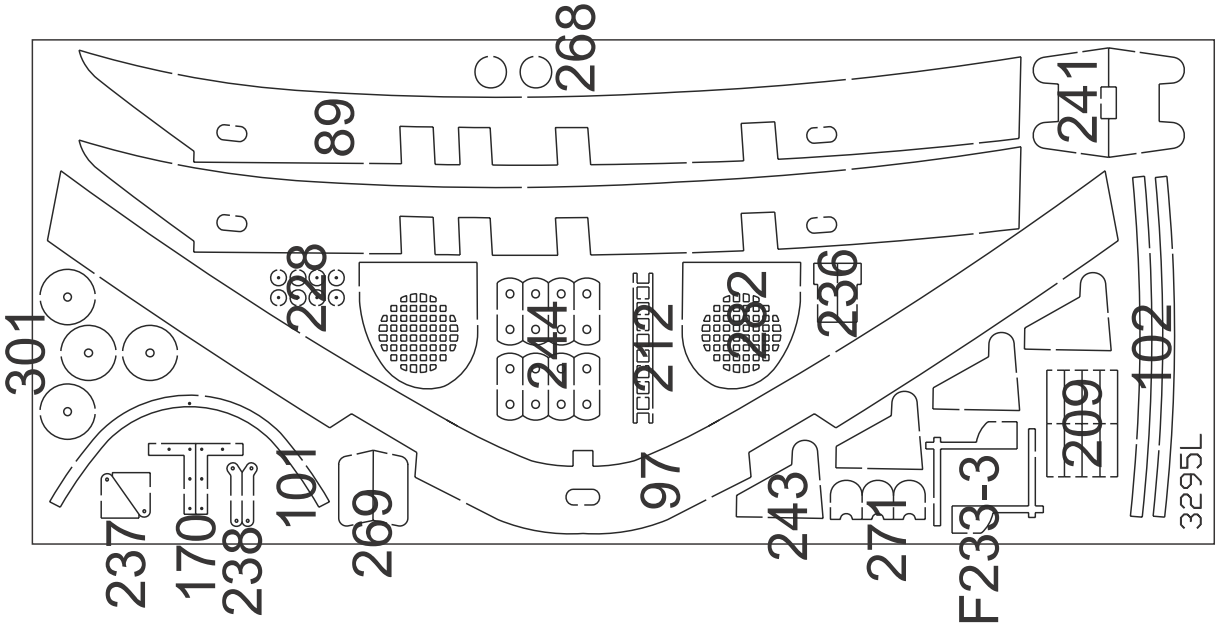
268
89
241
228
244
212
282
236
301
102
209
101
97
243
271
F233-3
237
170
238
269
3295L

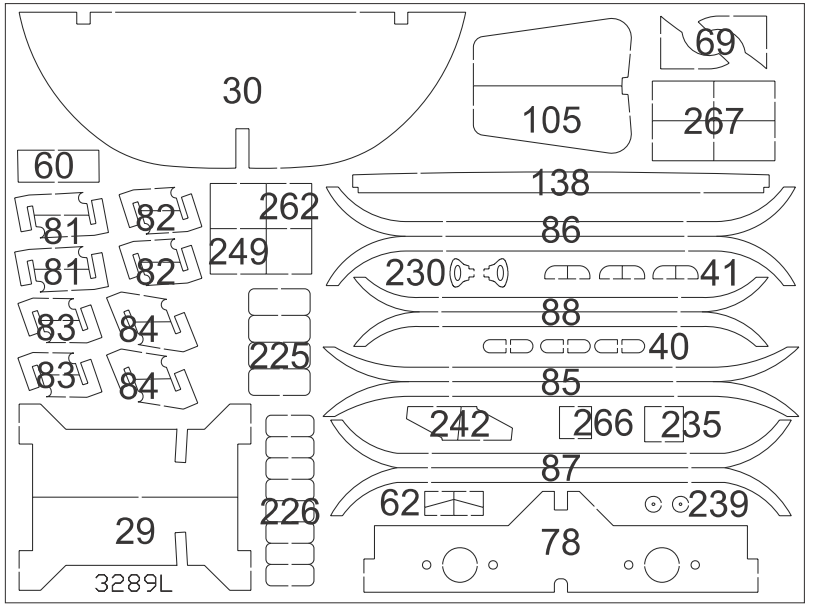
30
69
105
267
60
138
262
81
82
86
249
81
82
230
41
88
83
84
225
40
83
84
85
242
266
235
87
226
62
239
29
78
3289L

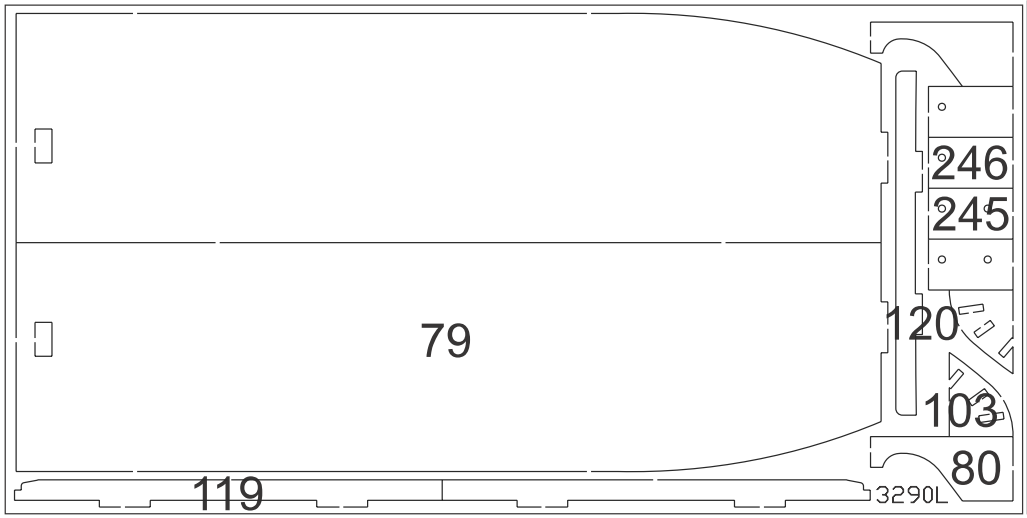
246
245
79
120
103
80
119
3290L

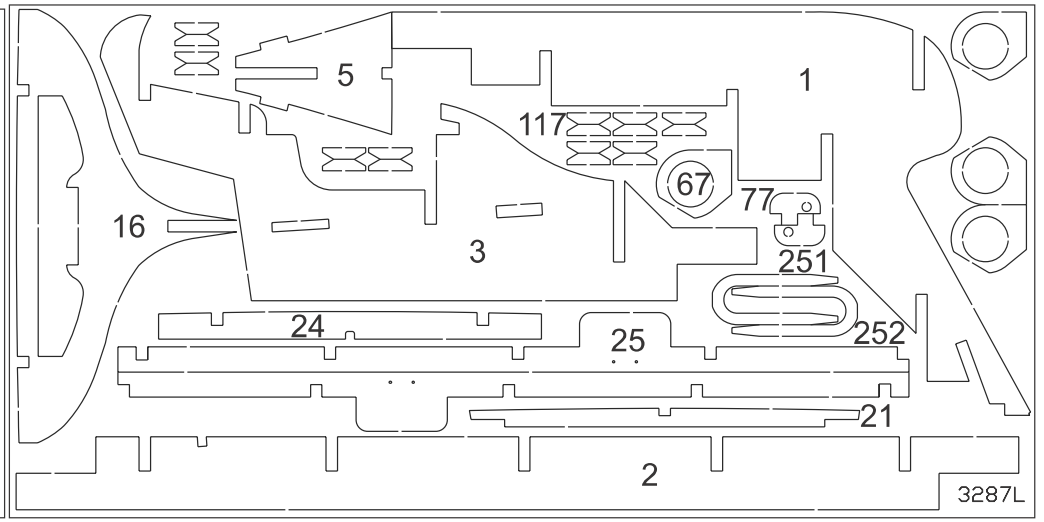
5
1
117
67
77
16
3
251
24
25
252
21
2
3287L

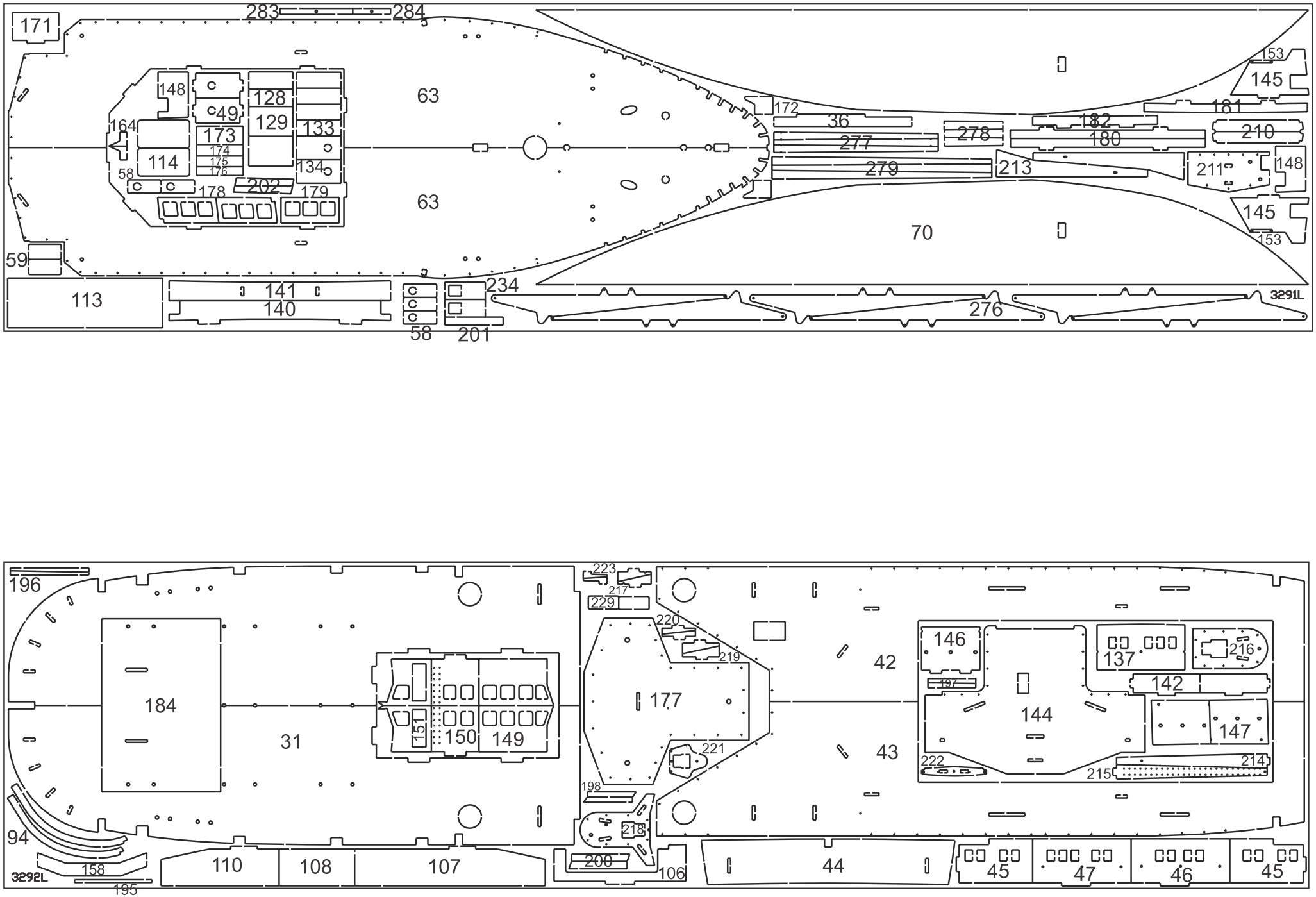
171
283
284
148
49
128
129
133
164
173
174
175
176
114
58
178
202
179
134
63
63
172
36
277
279
278
213
182
180
181
210
211
148
153
145
145
153
70
59
113
141
140
58
201
234
276
3291L
196
184
31
151
150
149
177
223
217
229
220
219
221
198
218
200
106
42
43
146
137
216
197
142
144
147
222
214
215
94
158
195
3292L
110
108
107
44
45
47
46
45

FIG.1

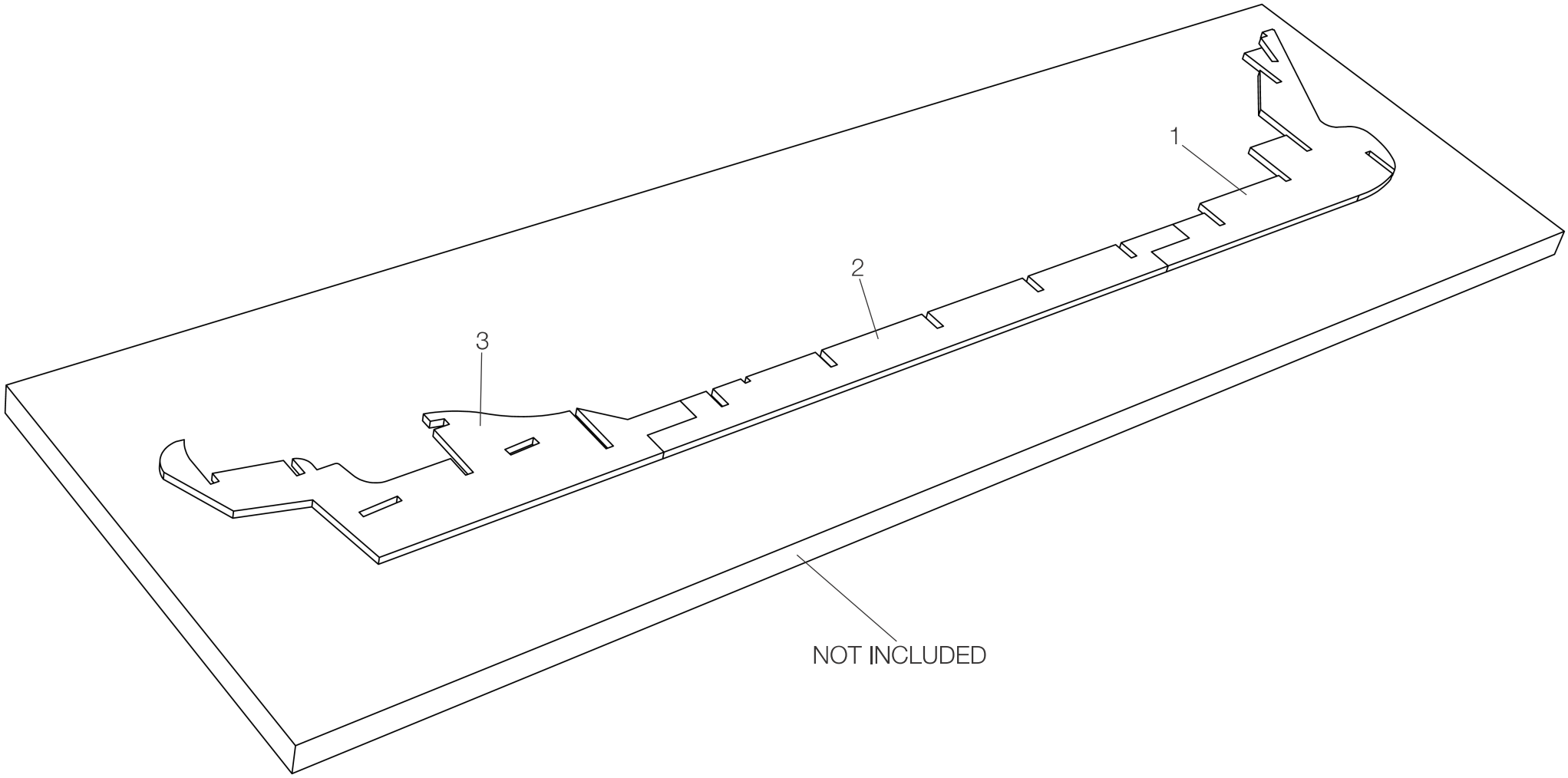

FIG.2

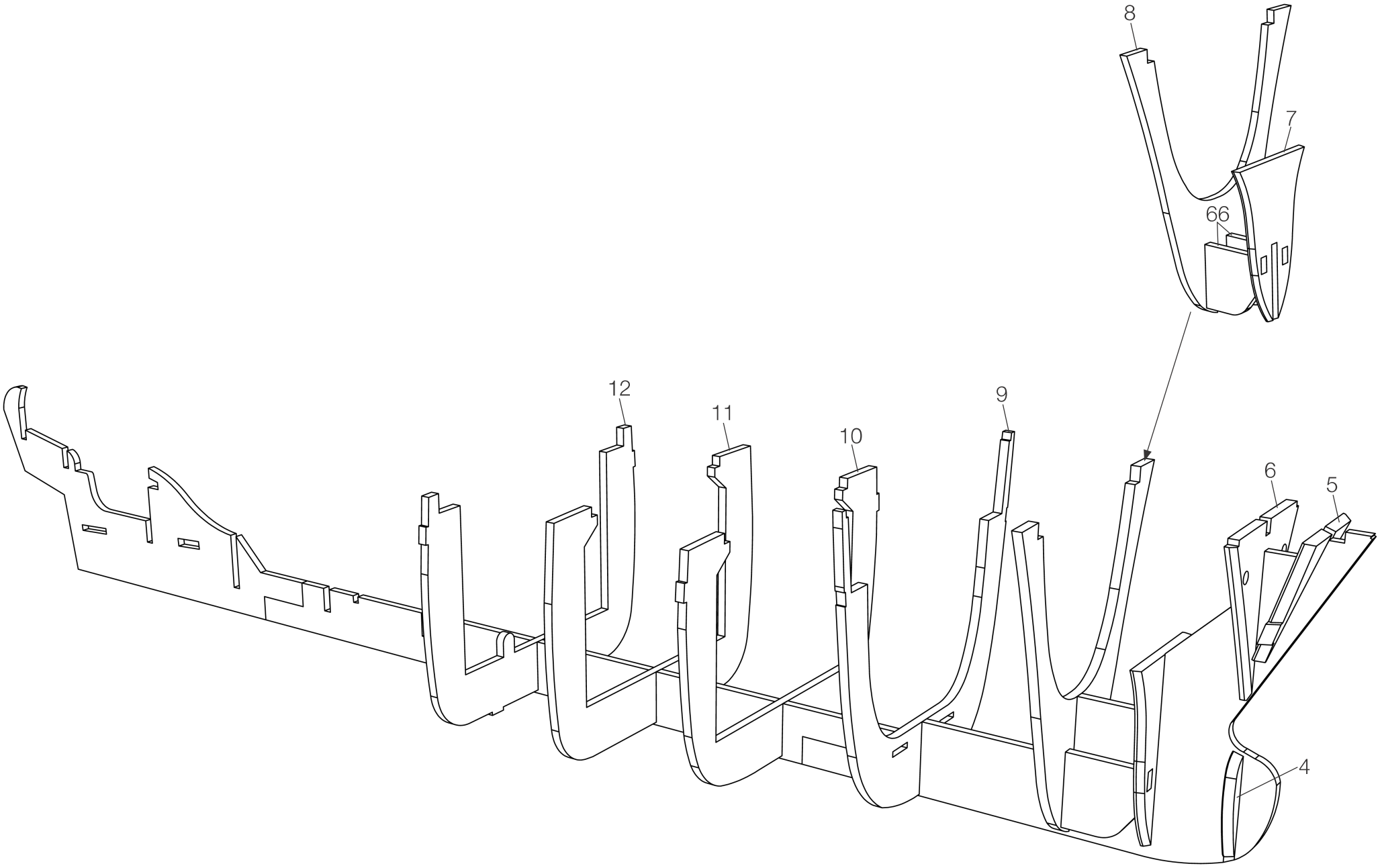

FIG.3

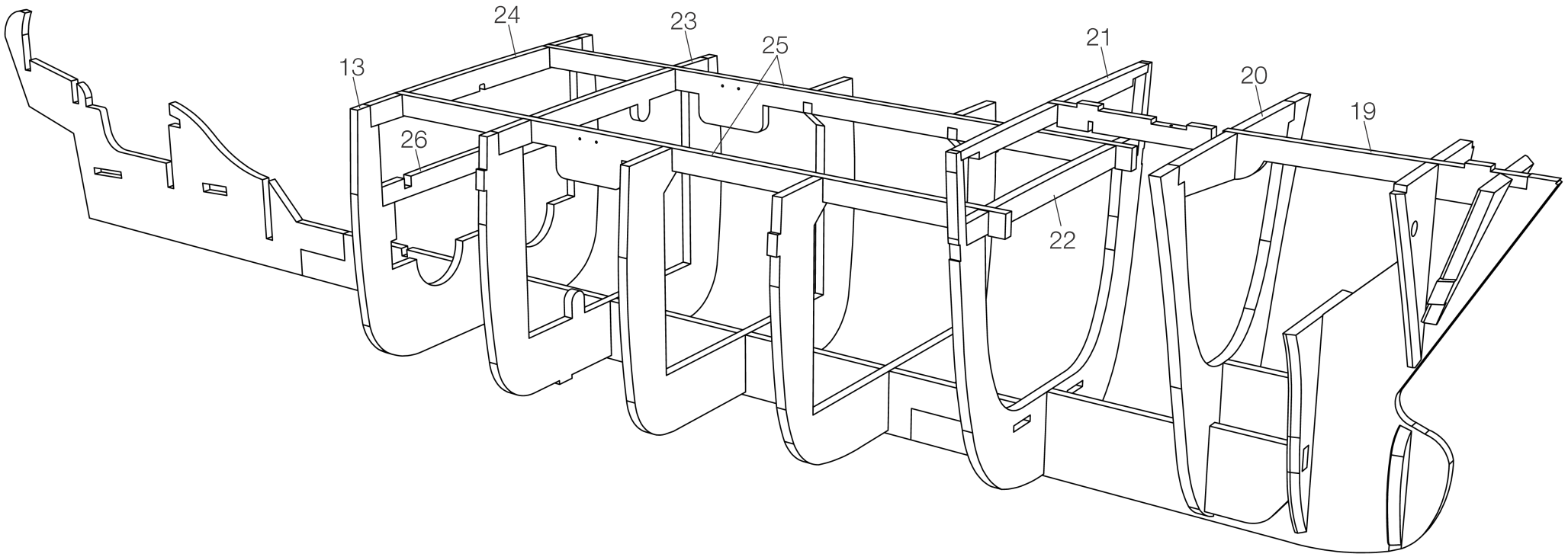

FIG.4

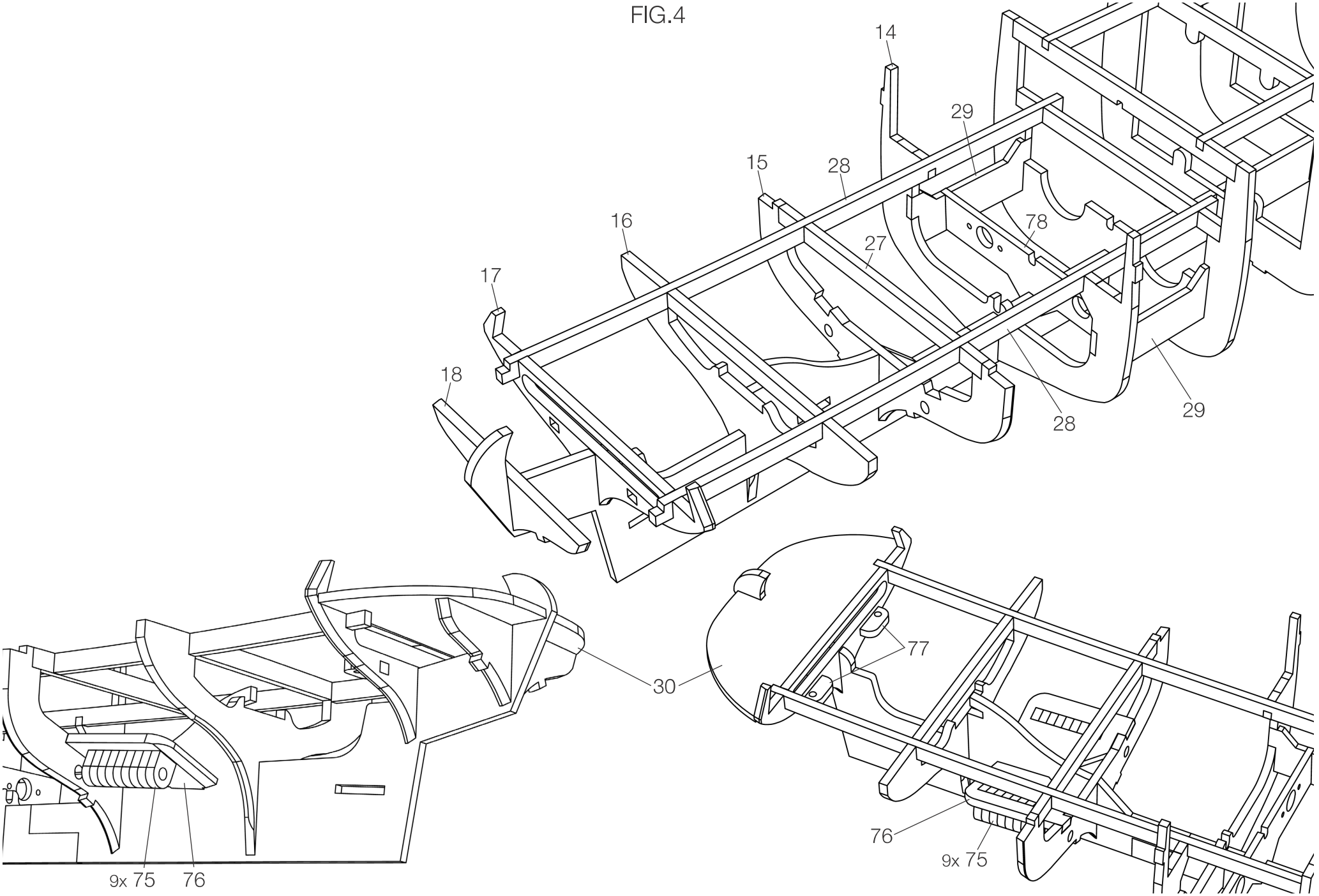

FIG.5

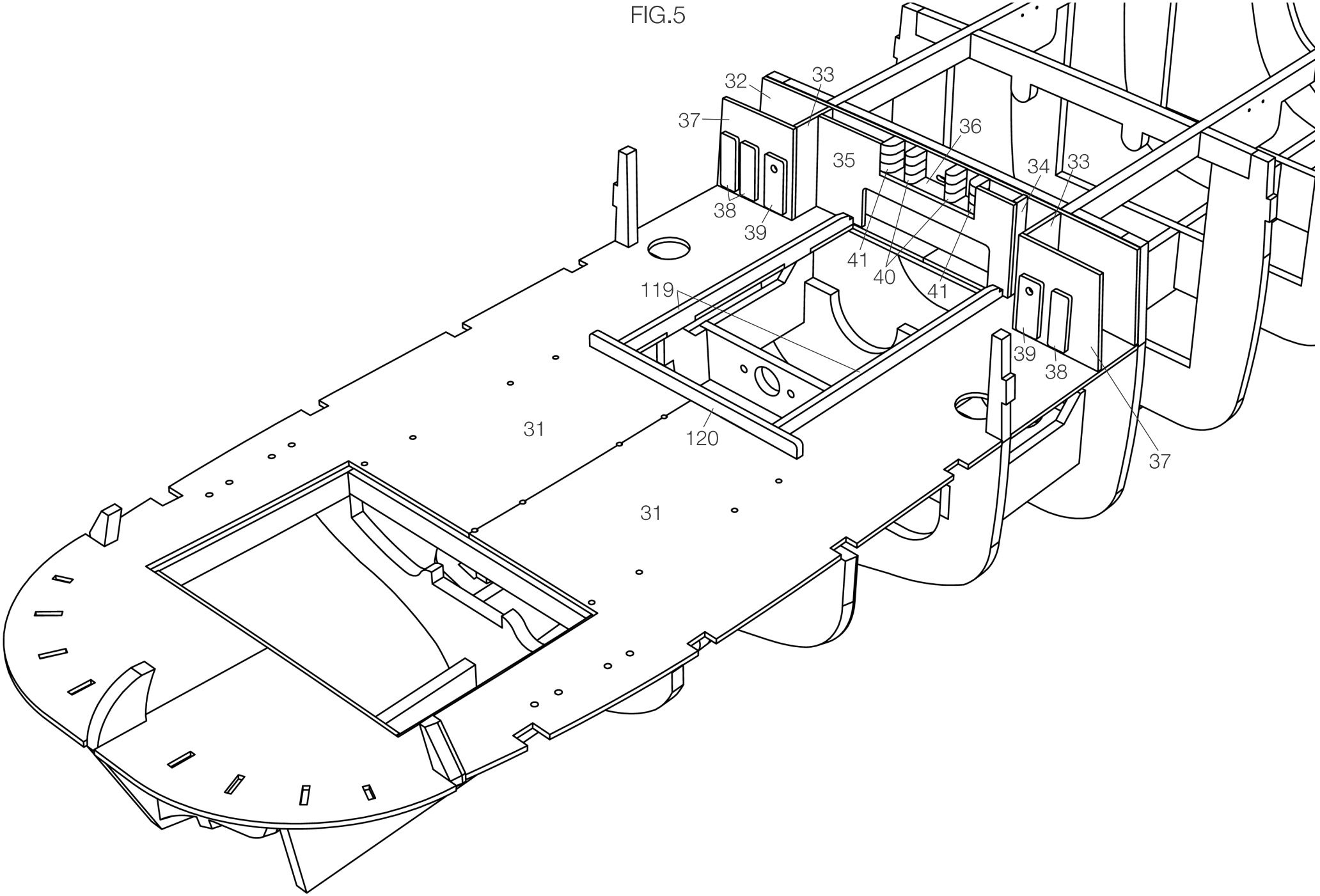

FIG.6

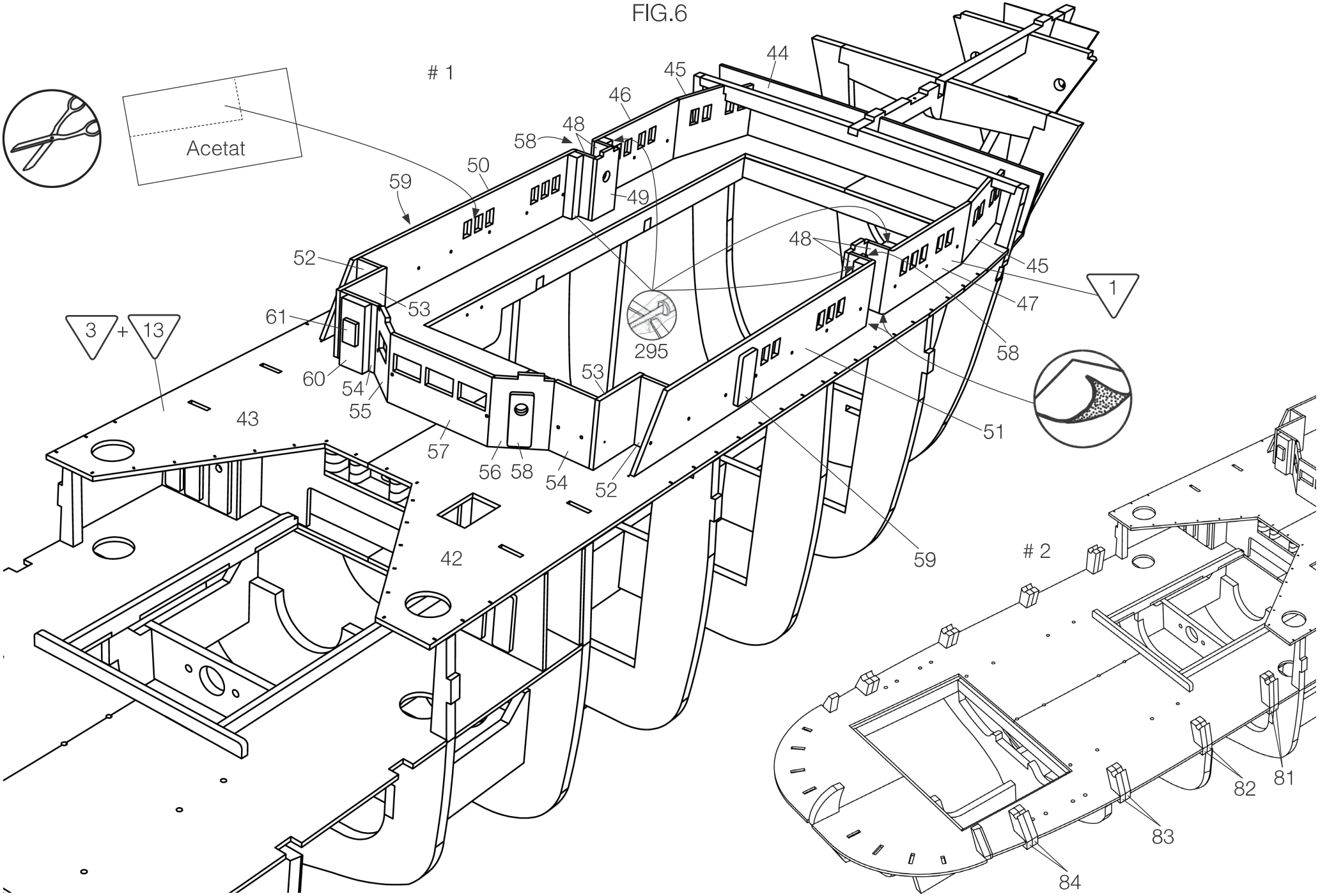

1
Acetat
44
45
46
48
58
50
59
49
52
53
61
3
+
13
60
54
55
43
57
56
58
54
52
53
295
48
45
47
1
58
51
59
42
2
81
82
83
84

FIG.7

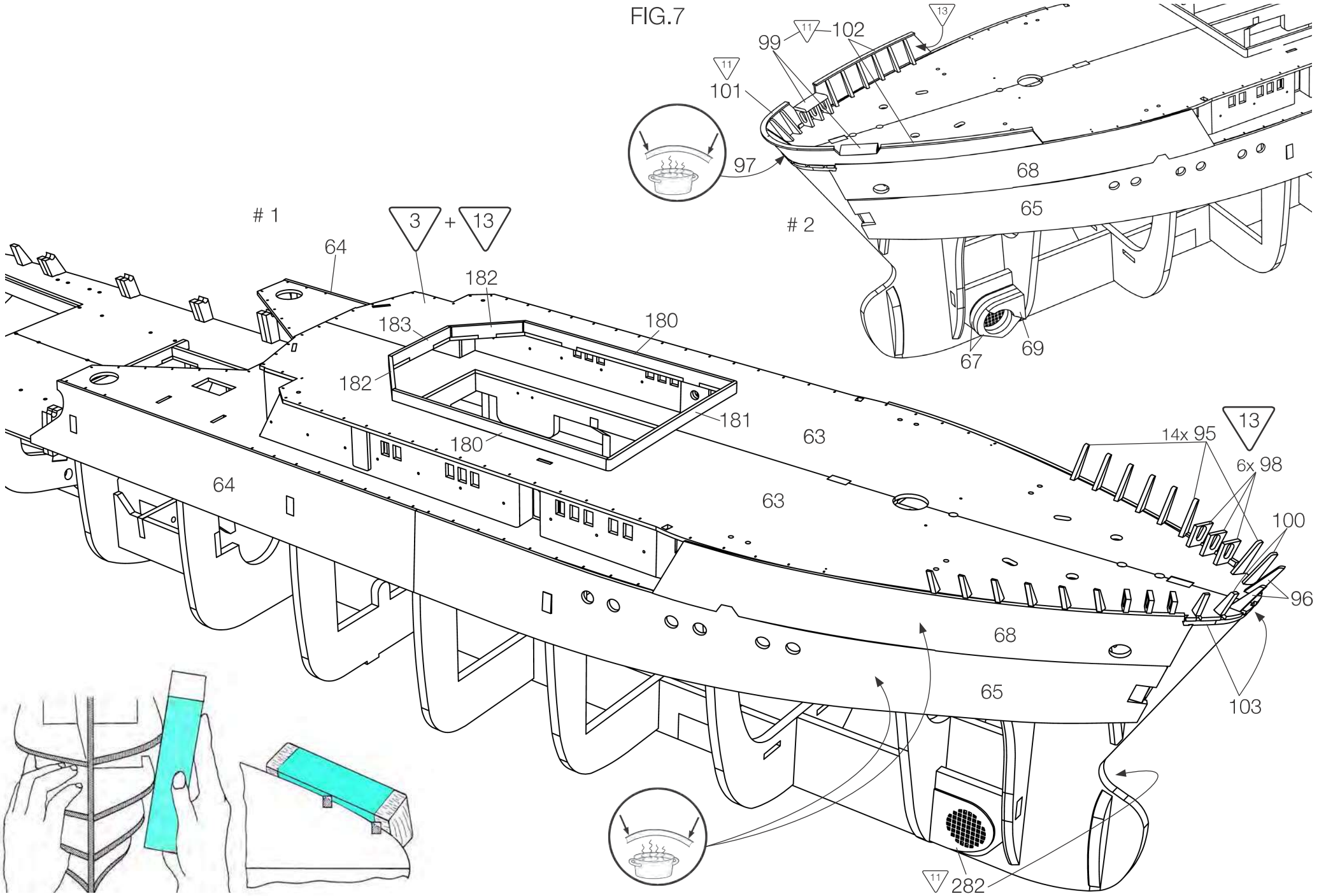
11
102
99
13
11
101
97
68
65
2
67
69
1
3
+
13
64
182
183
180
182
181
180
63
64
63
14x 95
13
6x 98
100
96
68
65
103
11
282

FIG.8

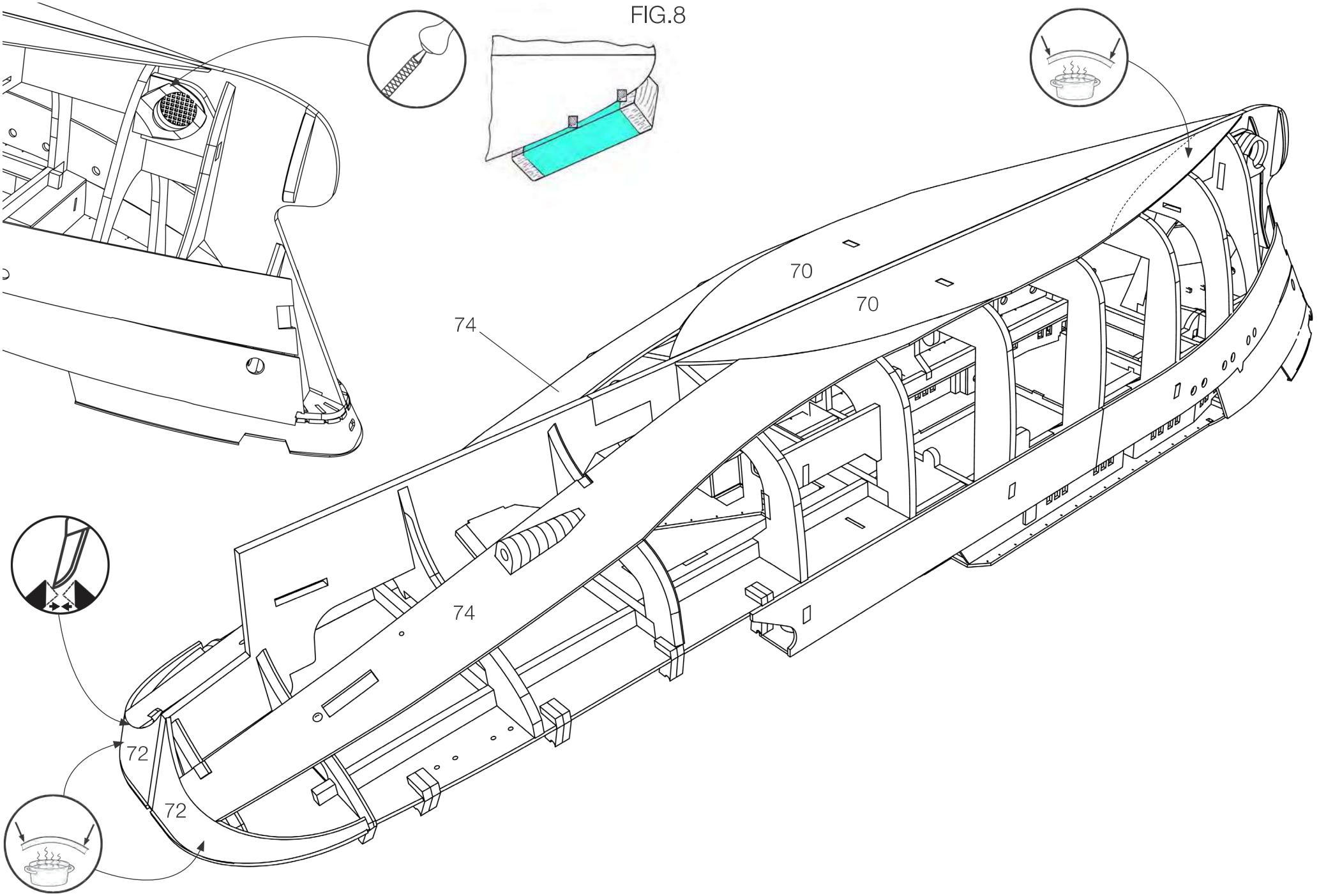

FIG.9

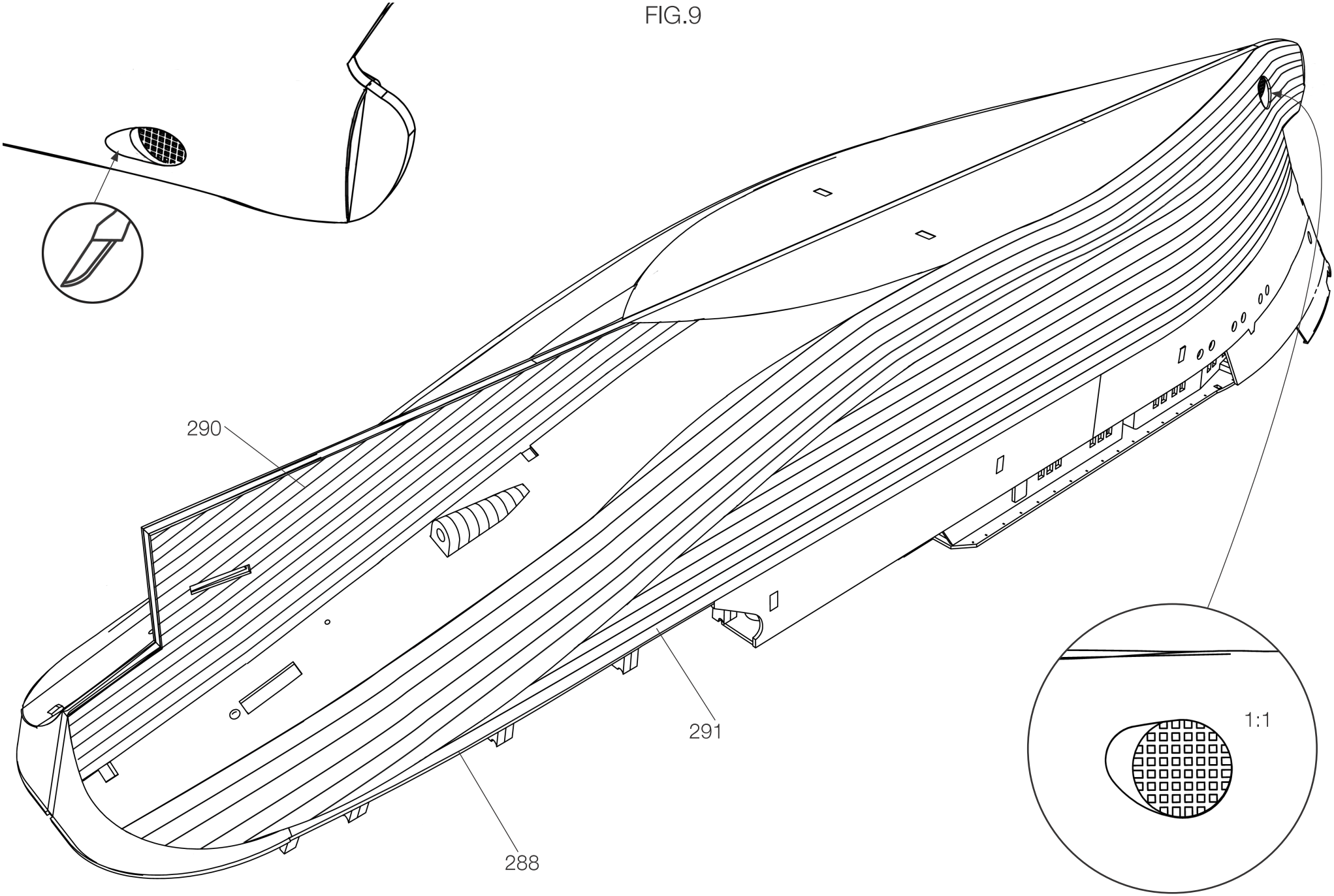

FIG.10

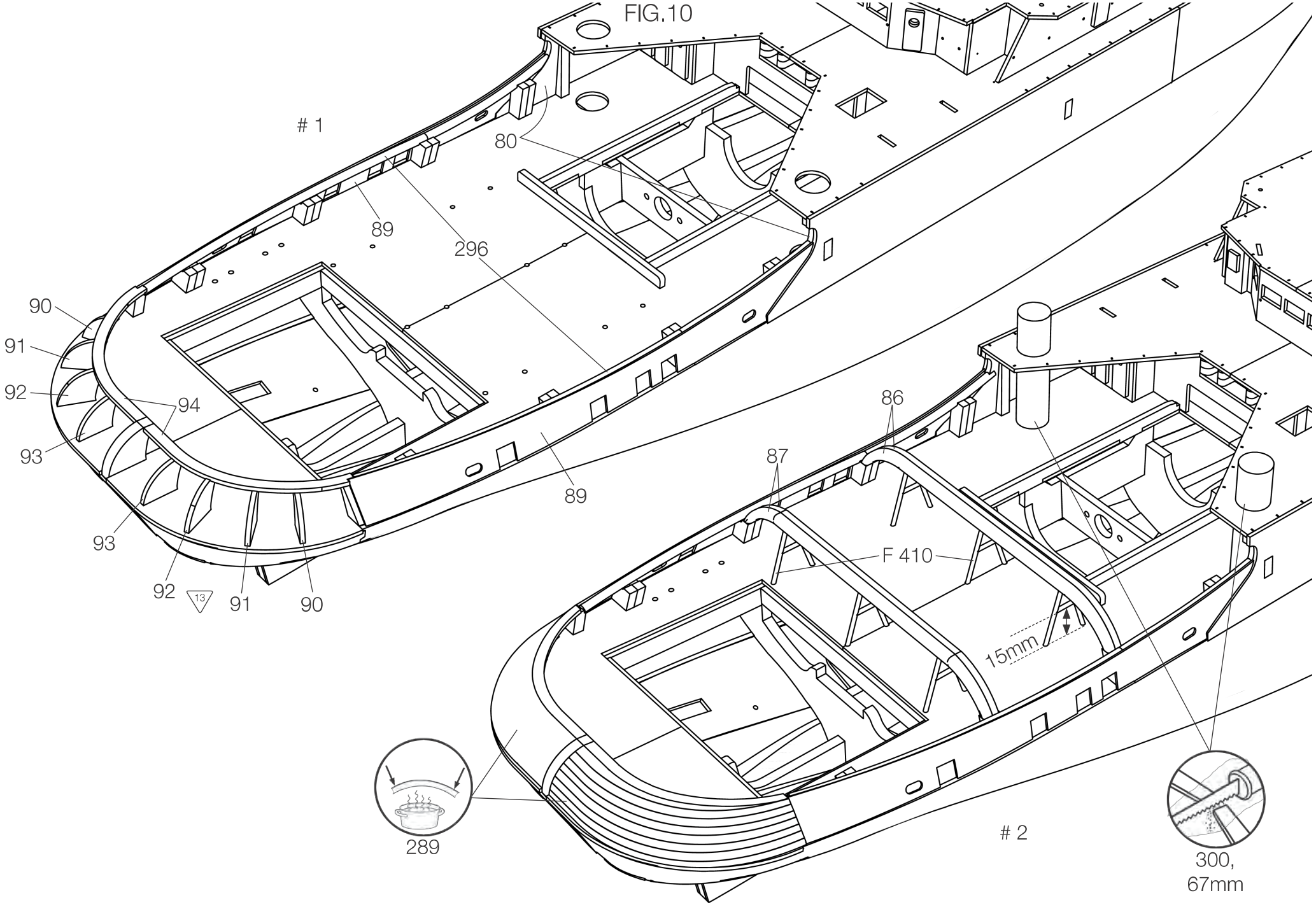
1
80
89
296
90
91
92
94
93
89
93
92
13
91
90
86
87
F 410
15mm
289
2
300,
67mm

FIG.11

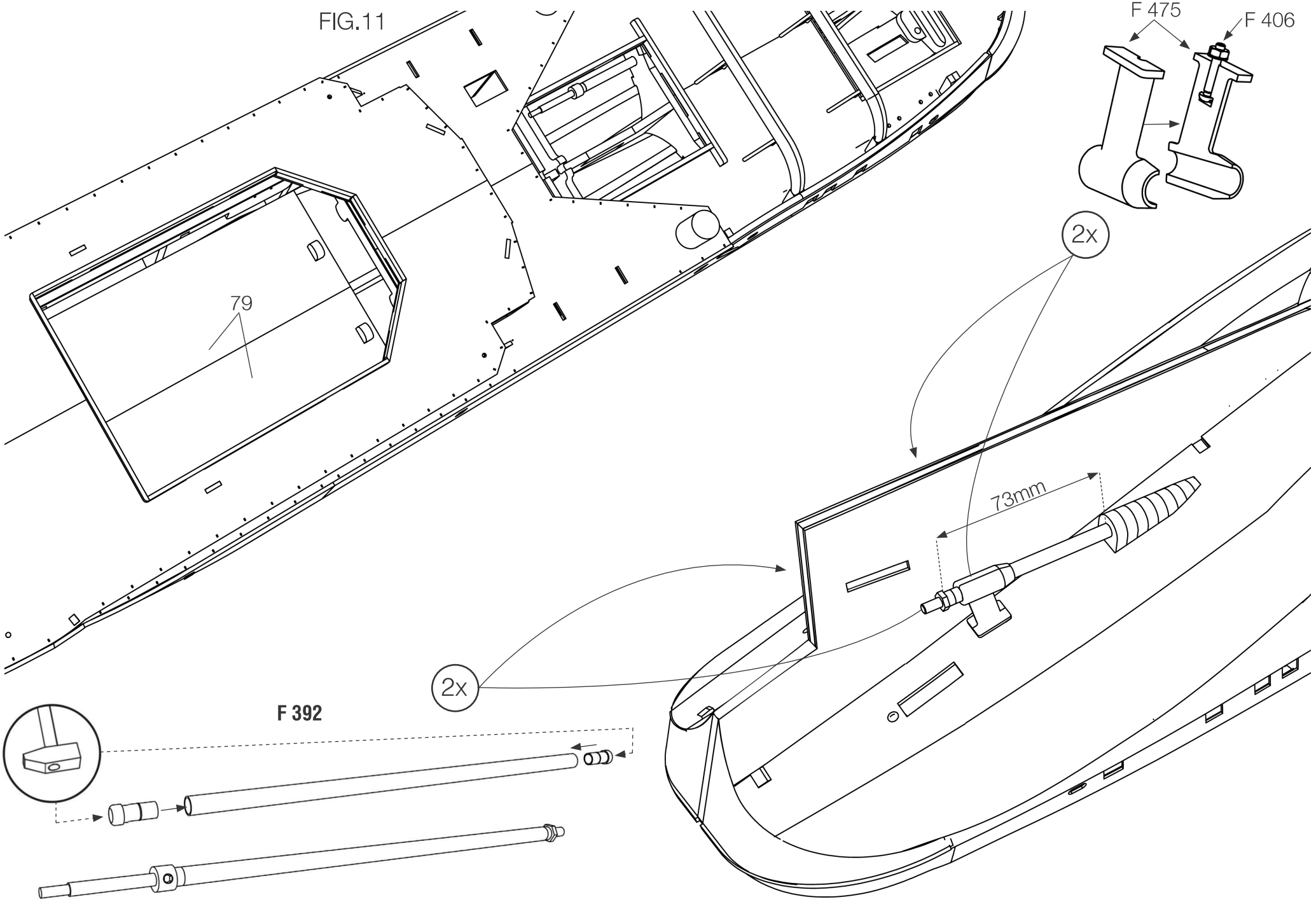

FIG.12

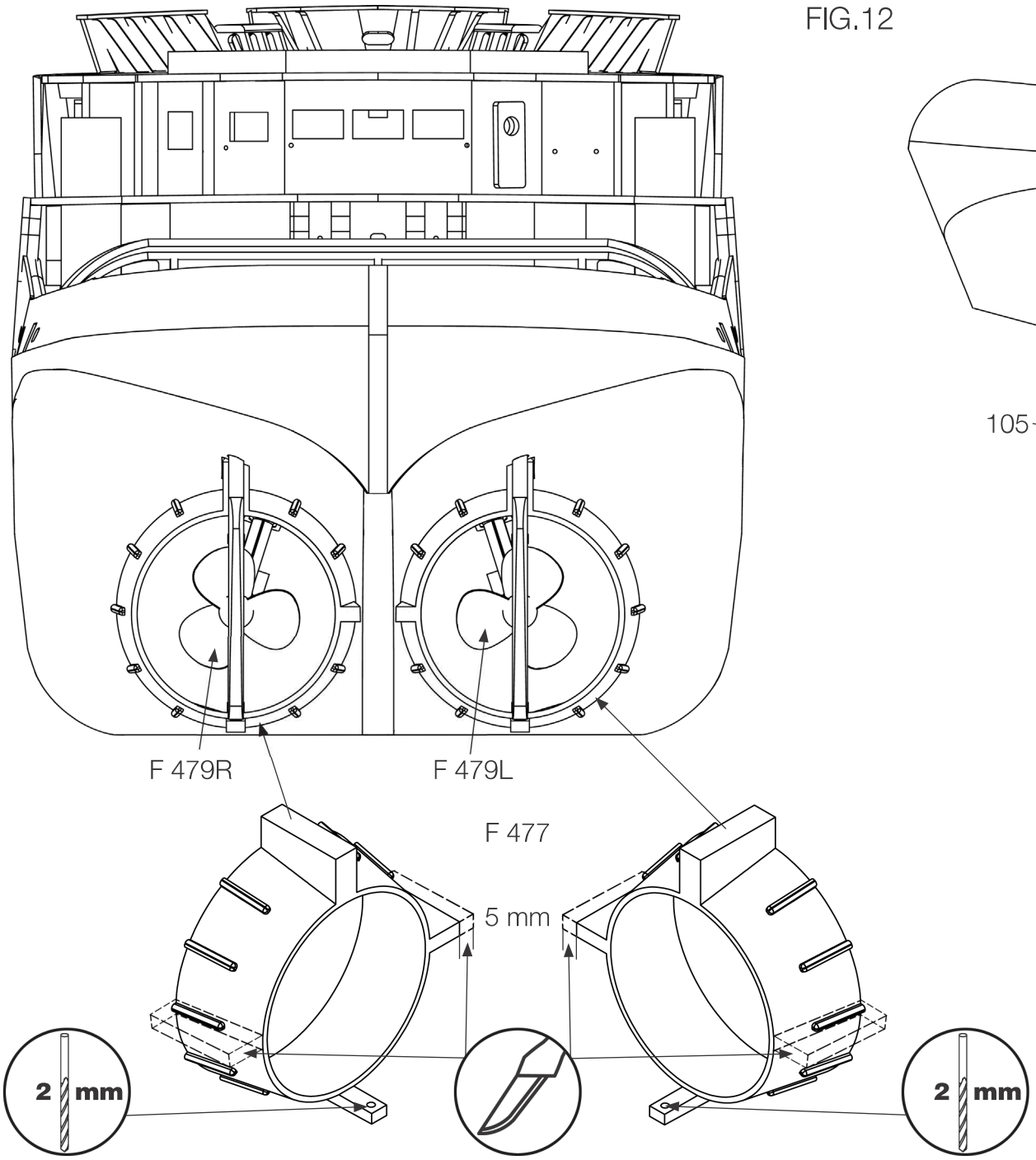

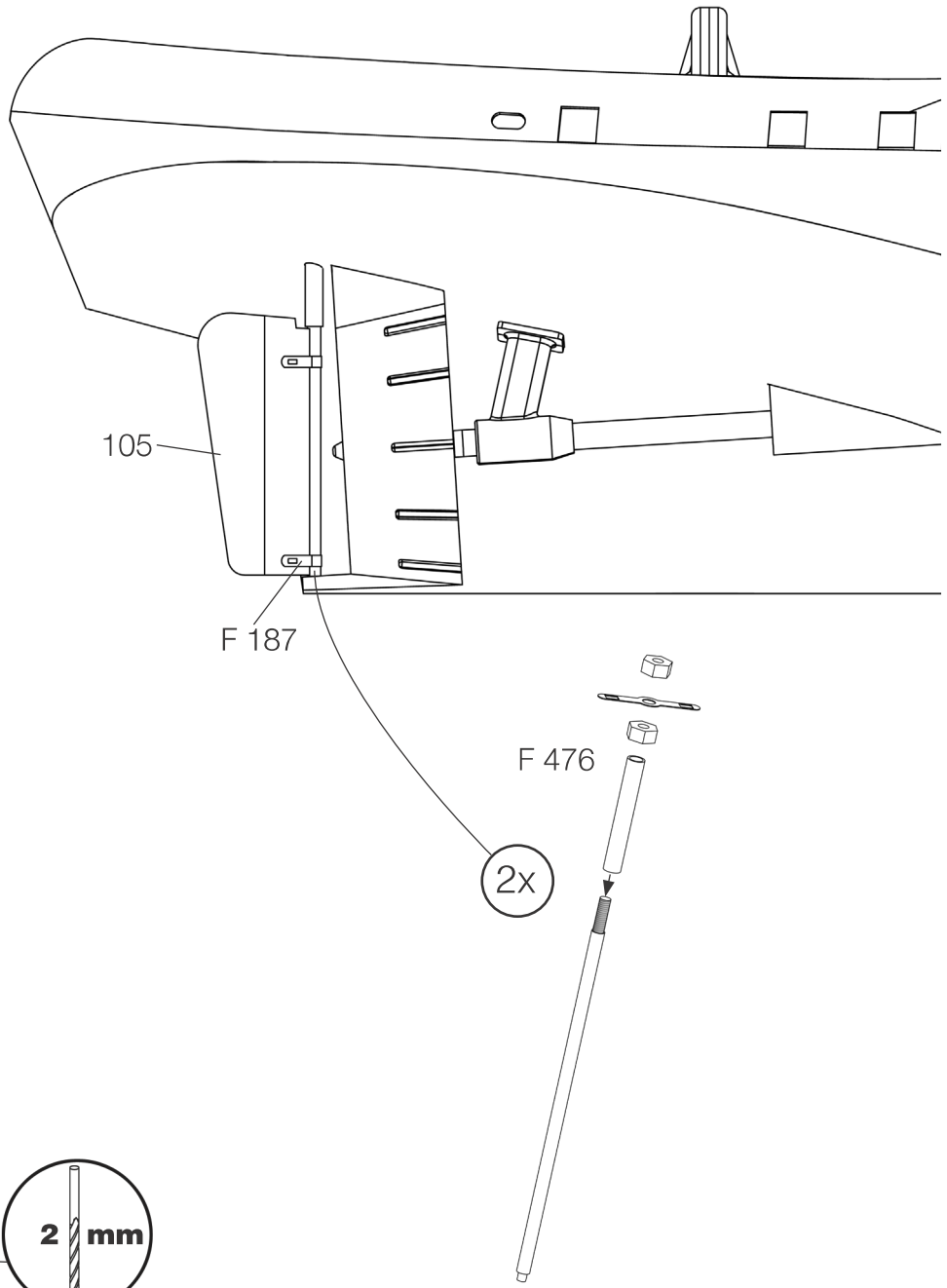

FIG.13

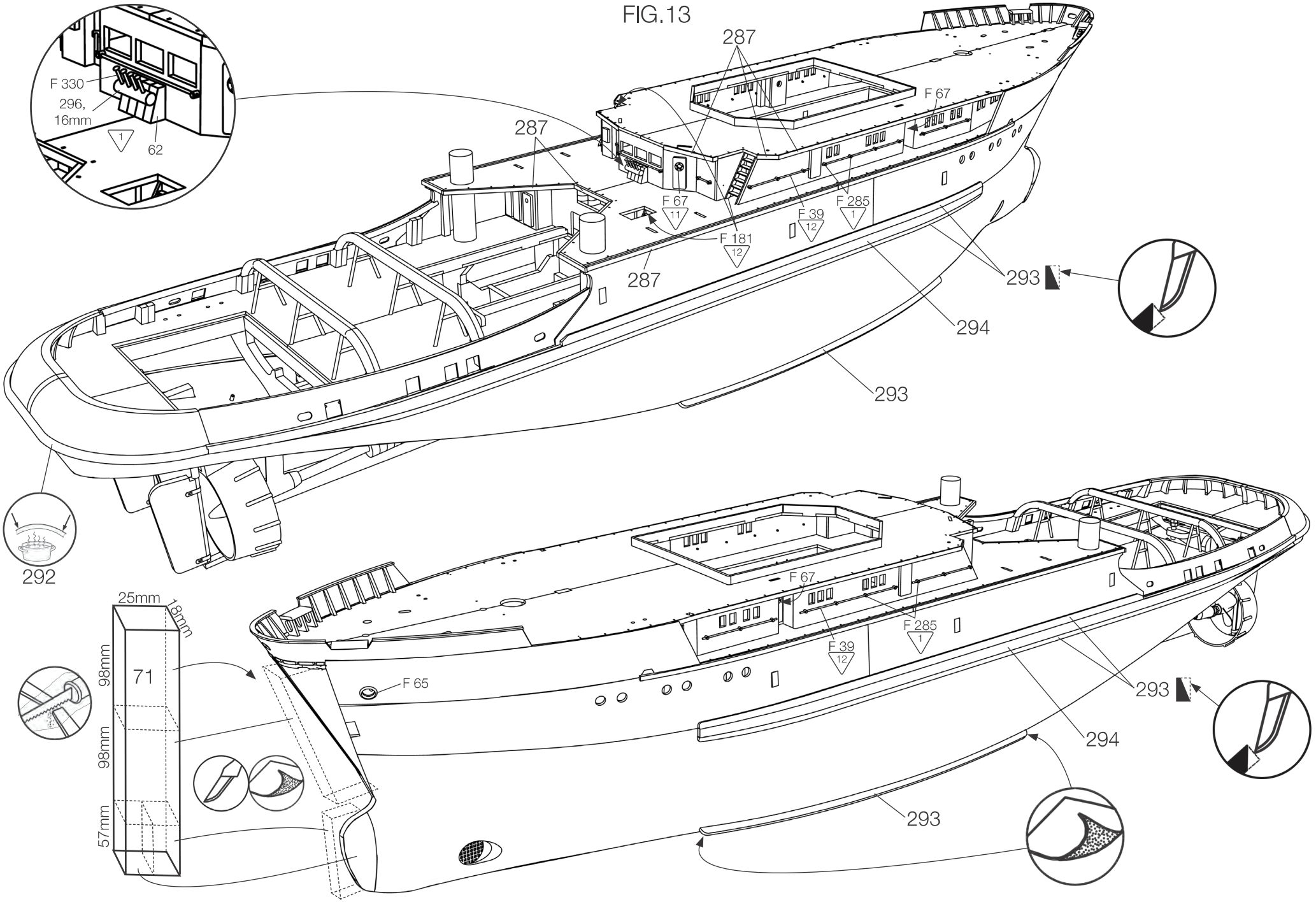
F 330
296,
16mm
1
62
287
287
F 67
F 67
11
F 39
12
F 285
1
F 181
12
287
293
294
293
292
25mm
18mm
98mm
71
98mm
57mm
F 67
F 39
12
F 285
1
F 65
293
294
293

FIG.14

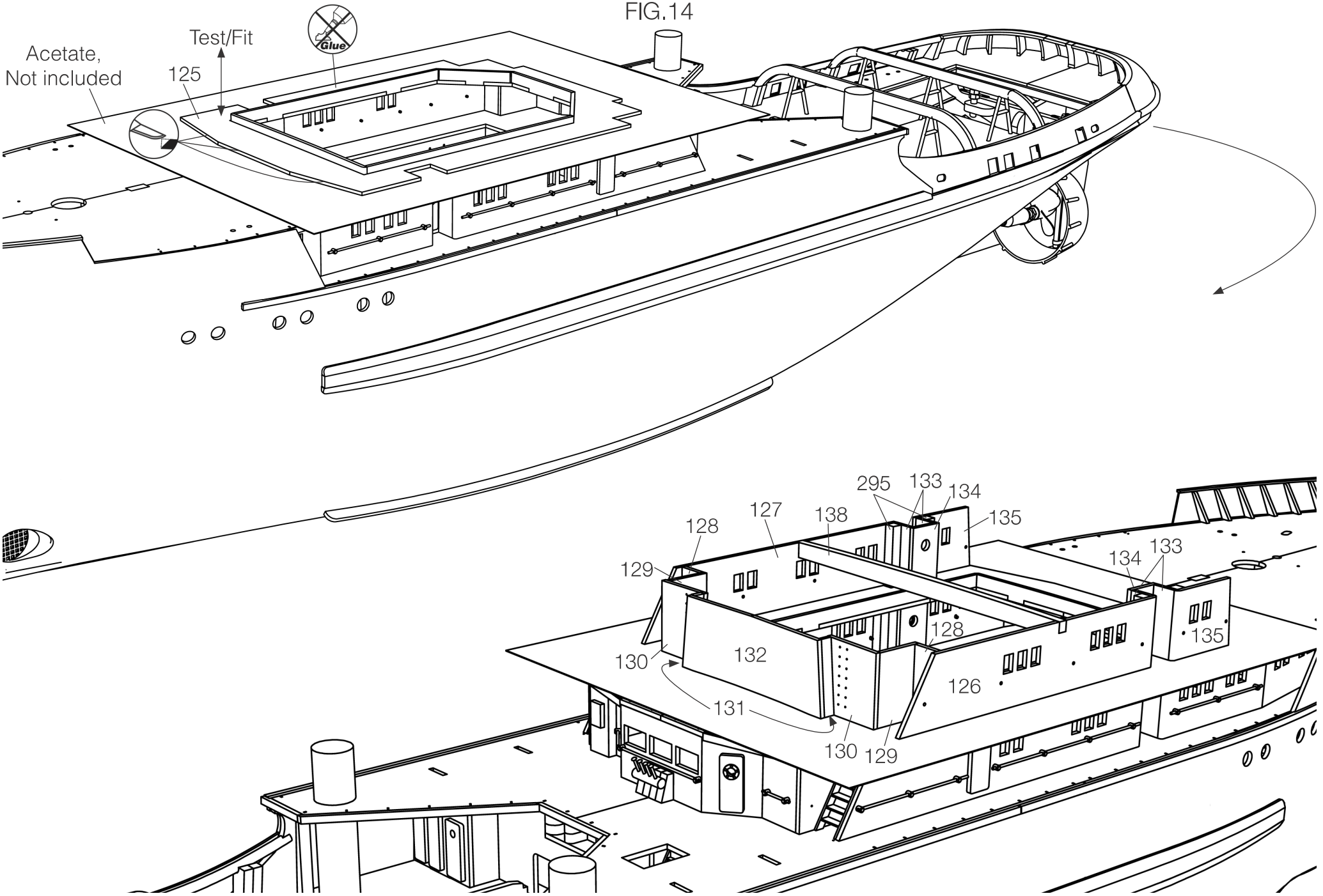
Acetate,
Not included
Test/Fit
125
Glue
295
133
134
127
138
135
128
129
134
133
128
135
132
130
126
131
130
129

FIG.15

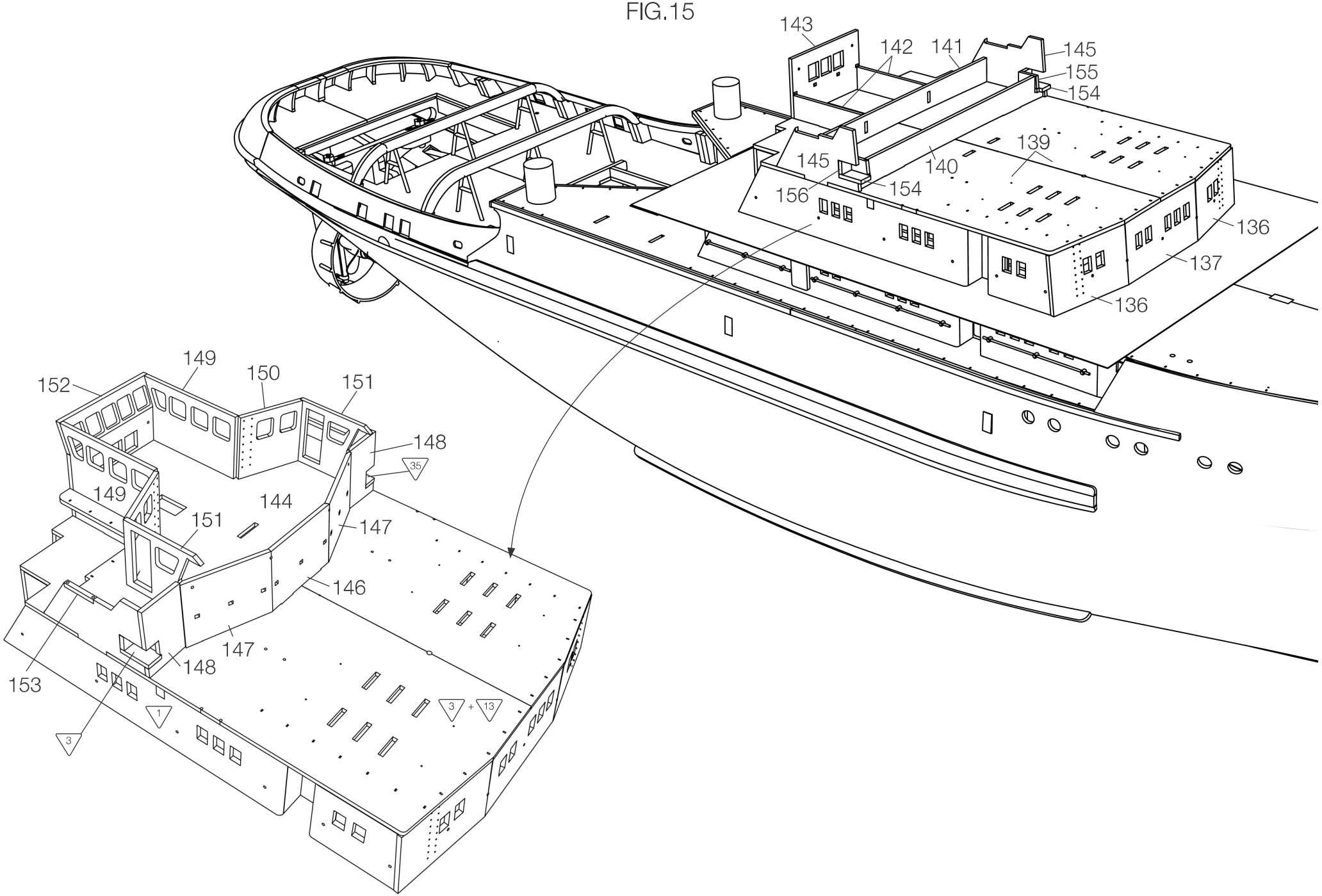
143
142
141
145
155
154
139
140
145
156
154
136
137
136
149
150
151
152
148
35
149
144
151
147
146
147
148
153
1
3
3
+
13

FIG.16

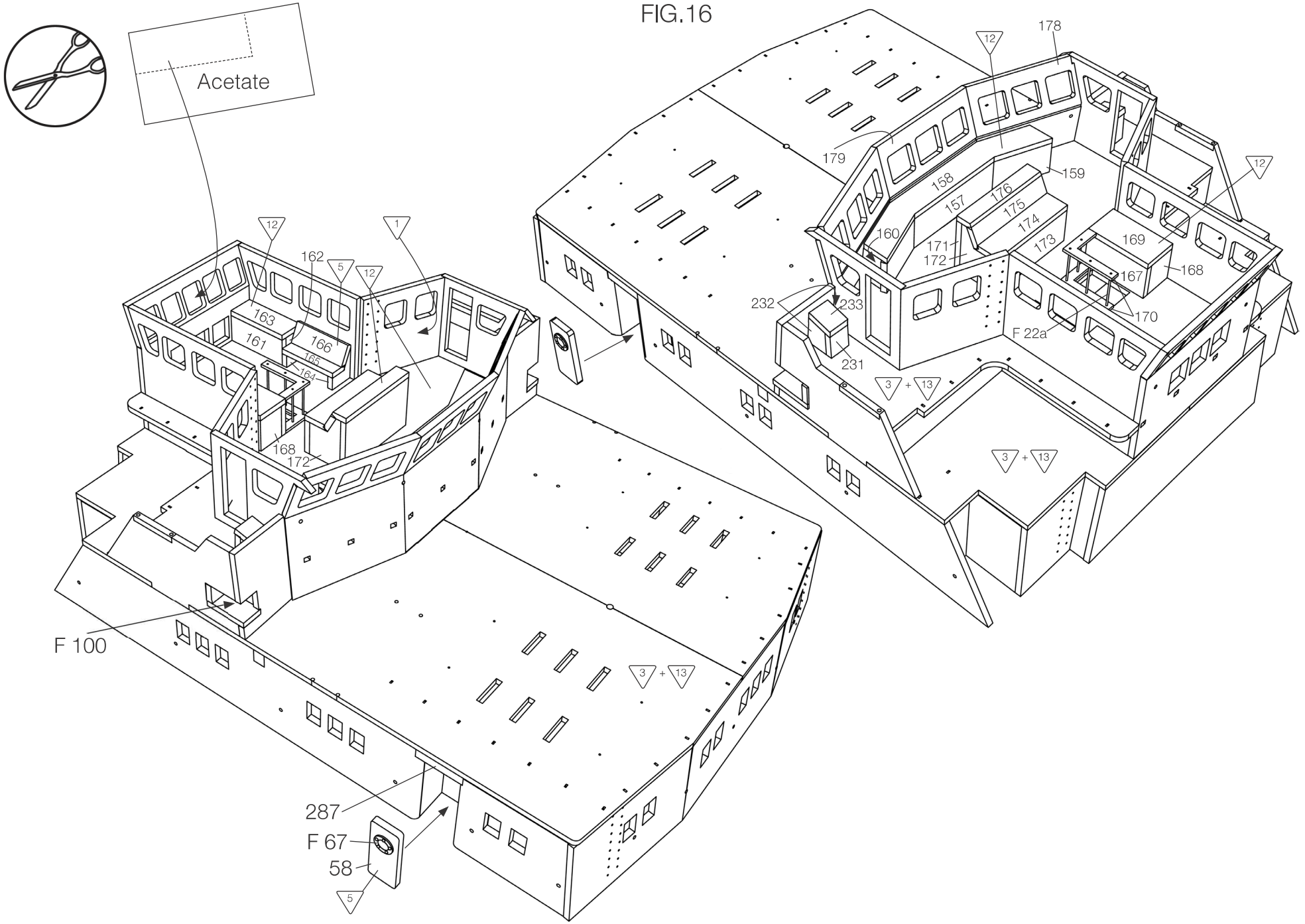
Acetate
12
1
162
5
12
163
161
166
165
164
168
172
F 100
287
F 67
58
5
3 + 13
178
12
179
158
159
157
176
175
174
173
160
171
172
169
167
168
170
F 22a
232
233
231
12
3 + 13

FIG.17

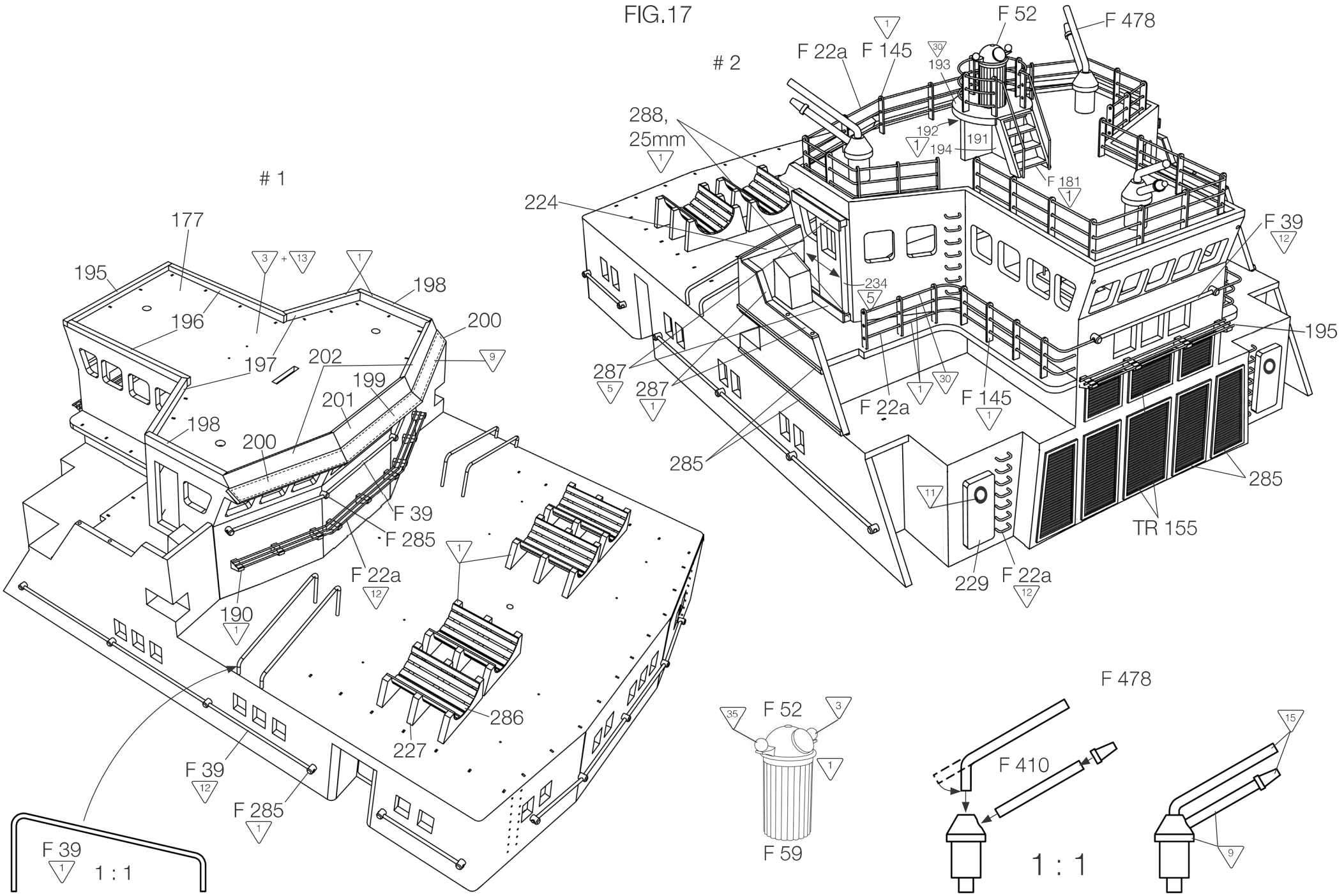
1
177
195
196
197
198
199
200
201
202
F 39
F 285
F 22a
190
286
227
F 39
F 285
F 39
1 : 1
2
F 22a
F 145
F 52
F 478
193
288,
25mm
192
194
191
F 181
224
234
287
287
285
F 22a
F 145
F 39
195
285
TR 155
229
F 22a
F 52
F 59
F 478
F 410
1 : 1

FIG.18

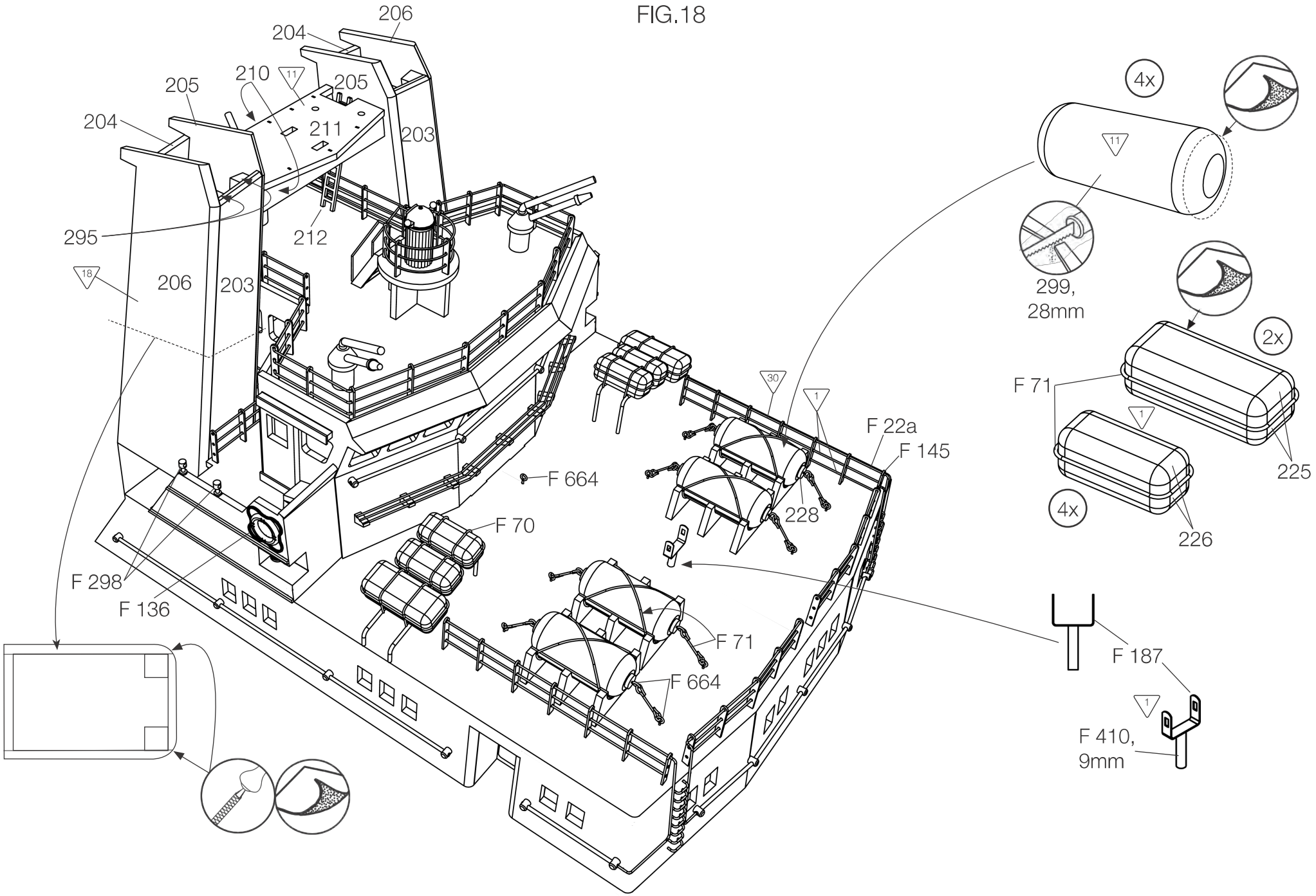
206
204
205
210
11
205
204
211
203
295
212
18
206
203
30
1
F 22a
F 145
F 664
228
F 70
F 298
F 136
F 71
F 664
4x
11
299,
28mm
2x
F 71
1
225
4x
226
F 187
1
F 410,
9mm

FIG.19

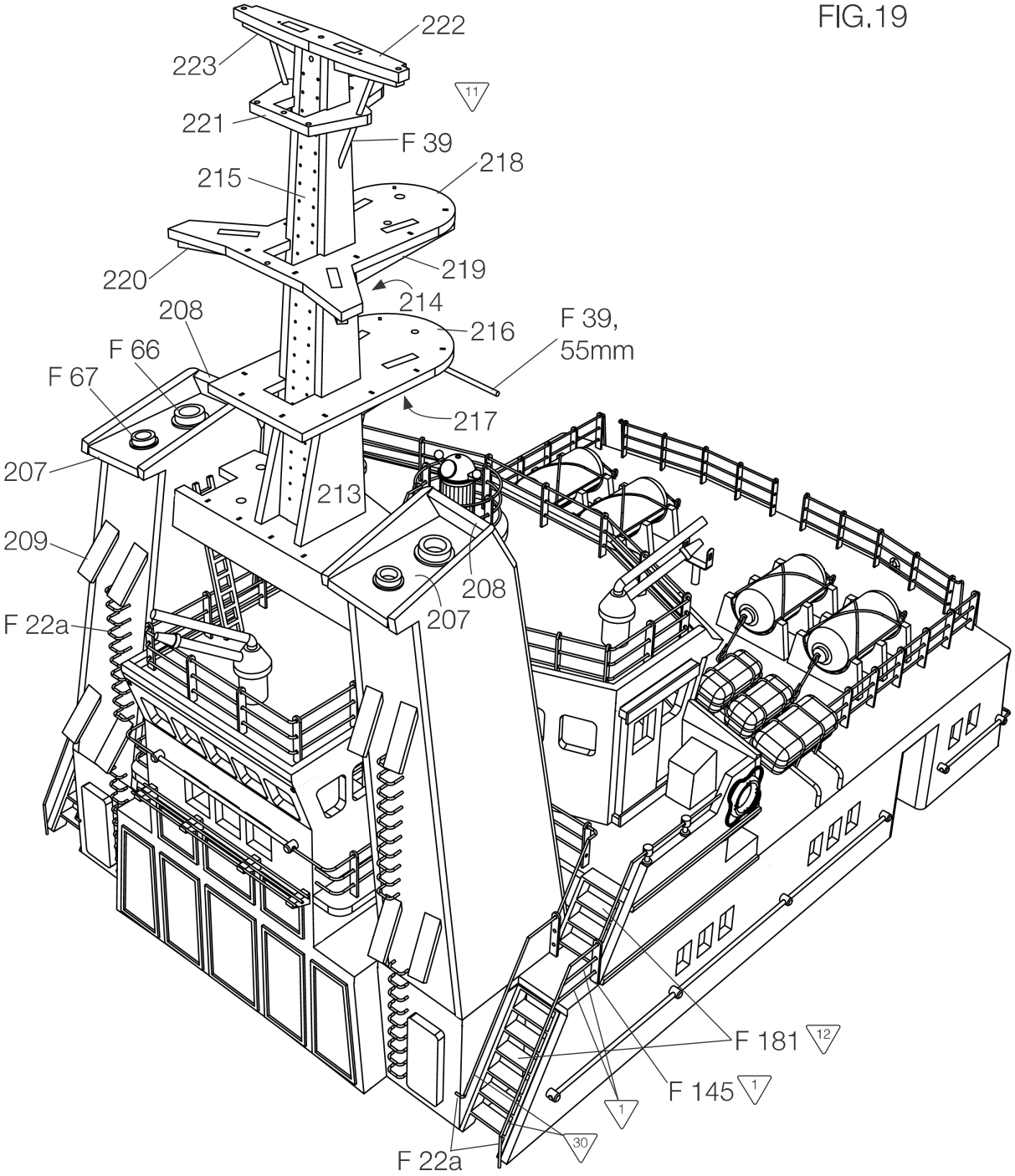
222
223
11
221
F 39
218
215
220
219
214
208
216
F 39,
55mm
F 66
F 67
217
207
213
209
208
207
F 22a
F 181
12
F 145
1
1
30
F 22a

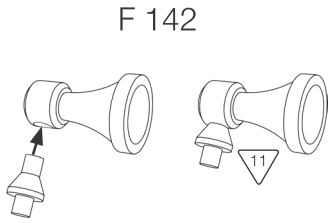
F 142
11

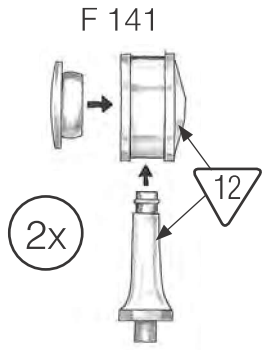
F 141
12
2x

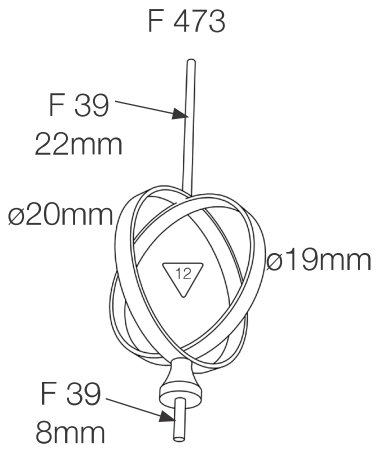
F 473
F 39
22mm
ø20mm
ø19mm
12
F 39
8mm

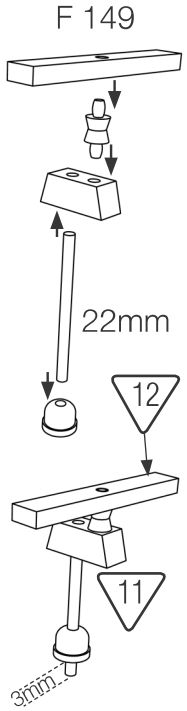
F 149
22mm
12
11
3mm

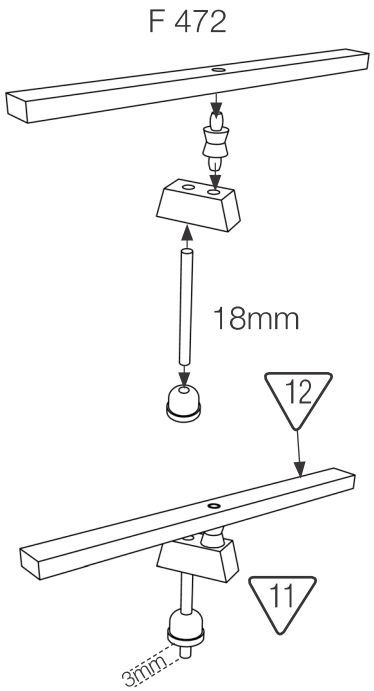
F 472
18mm
12
11
3mm

FIG.20

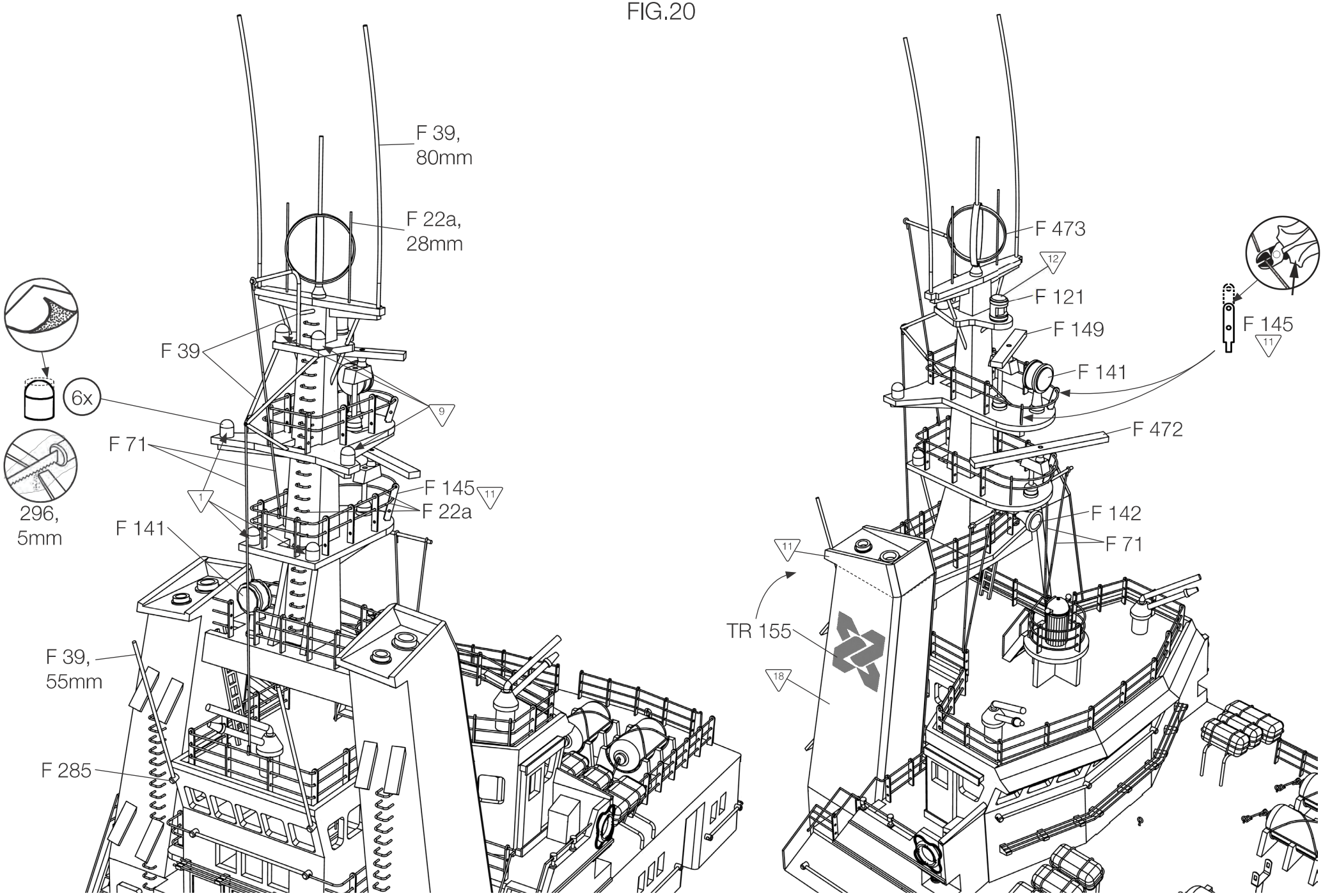
F 39,
80mm
F 22a,
28mm
F 39
6x
F 71
F 145
11
F 22a
296,
5mm
F 141
F 39,
55mm
F 285
F 473
12
F 121
F 149
F 145
11
F 141
F 472
F 142
F 71
11
TR 155
18

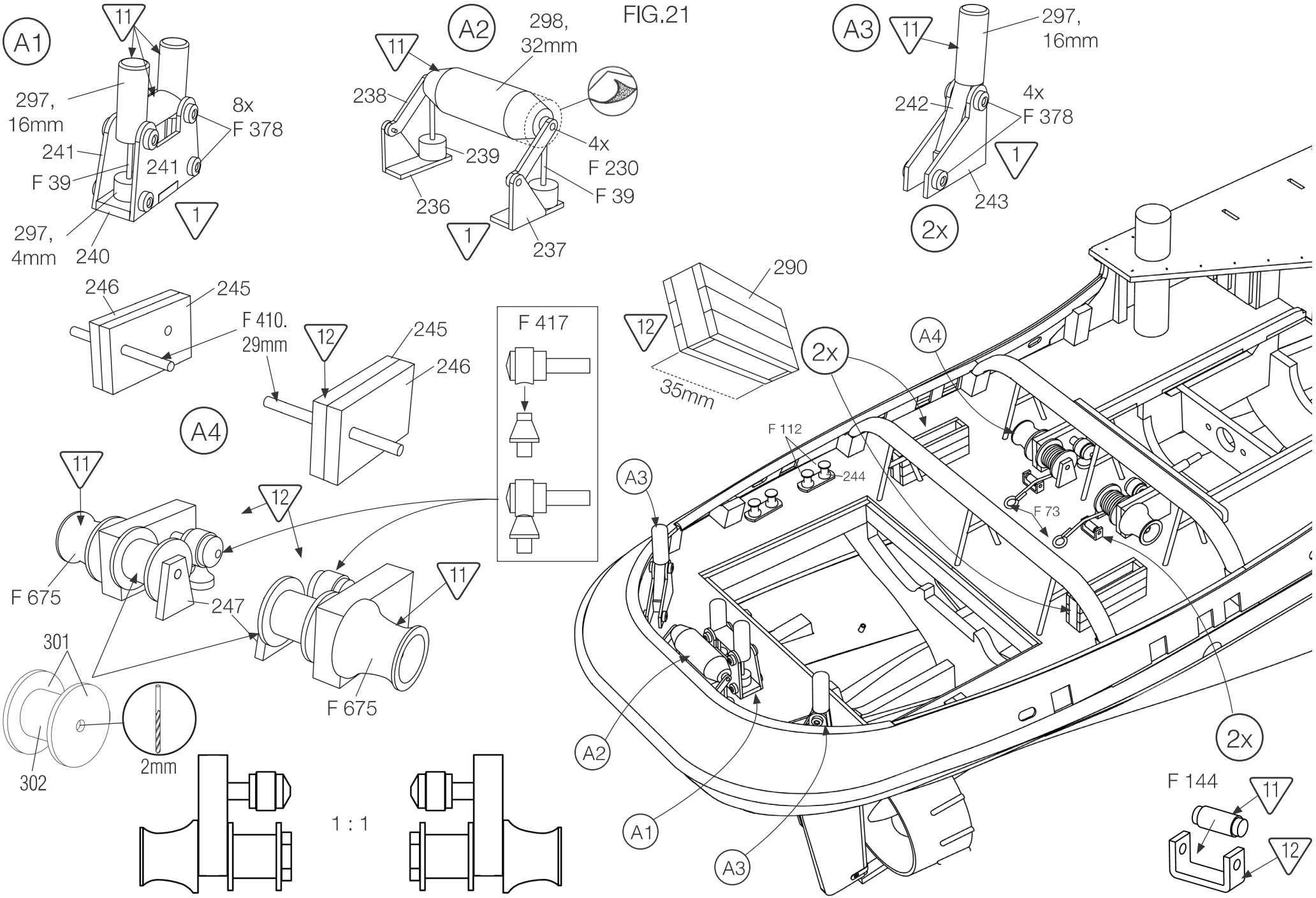
FIG.21
A1
11
297,
16mm
241
F 39
241
297,
4mm
240
1
8x
F 378
A2
11
298,
32mm
238
239
236
1
237
4x
F 230
F 39
A3
11
297,
16mm
242
4x
F 378
1
243
2x
246
245
F 410.
29mm
12
245
246
A4
F 417
290
12
35mm
2x
A4
F 112
244
A3
F 73
11
12
F 675
247
11
301
302
2mm
F 675
1 : 1
A2
A1
A3
2x
F 144
11
12

FIG.22

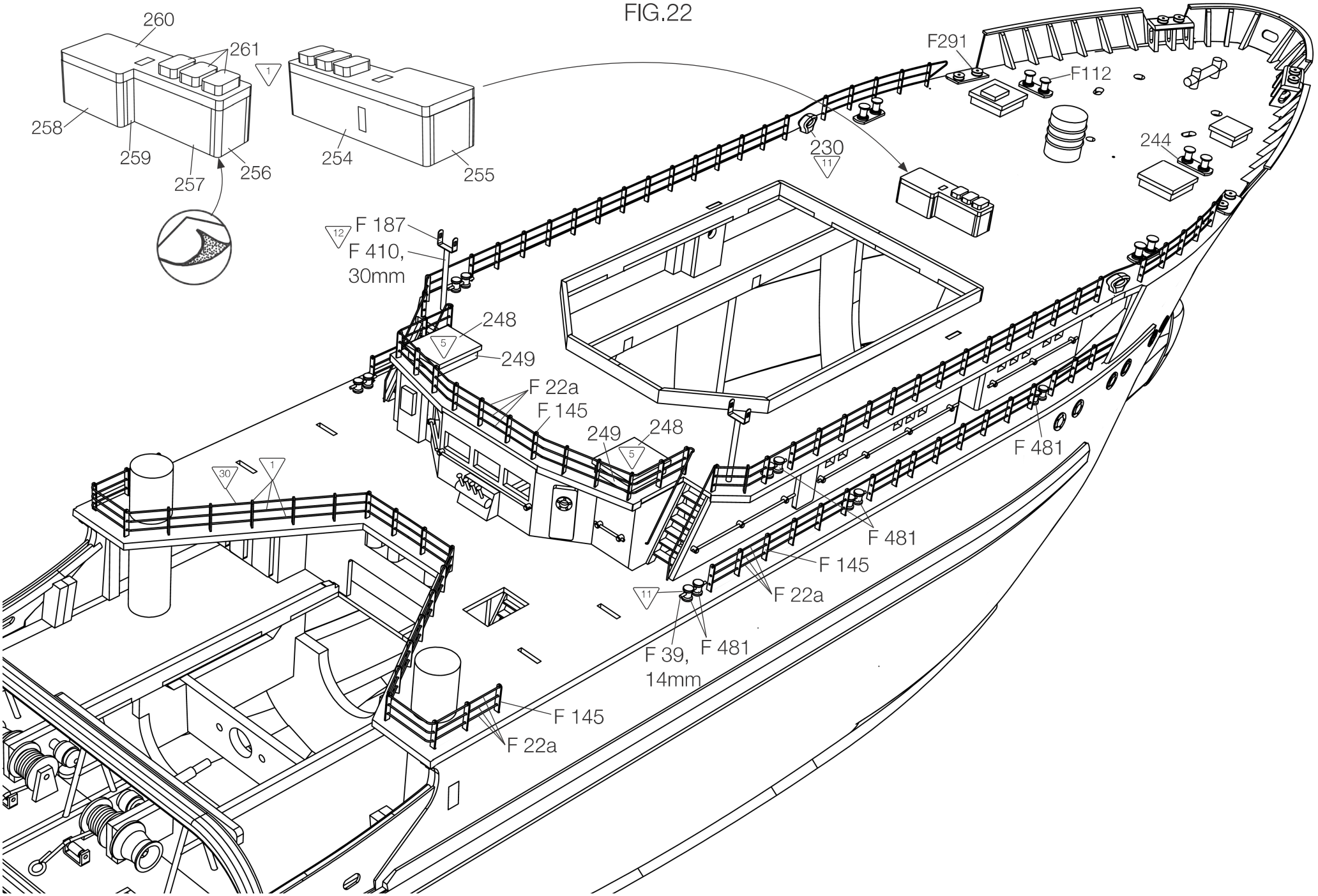
260
261
258
259
257
256
254
255
F291
F112
230
244
F 187
F 410,
30mm
248
249
F 22a
F 145
249
248
F 481
F 481
F 145
F 22a
F 39,
14mm
F 481
F 145
F 22a

FIG.23

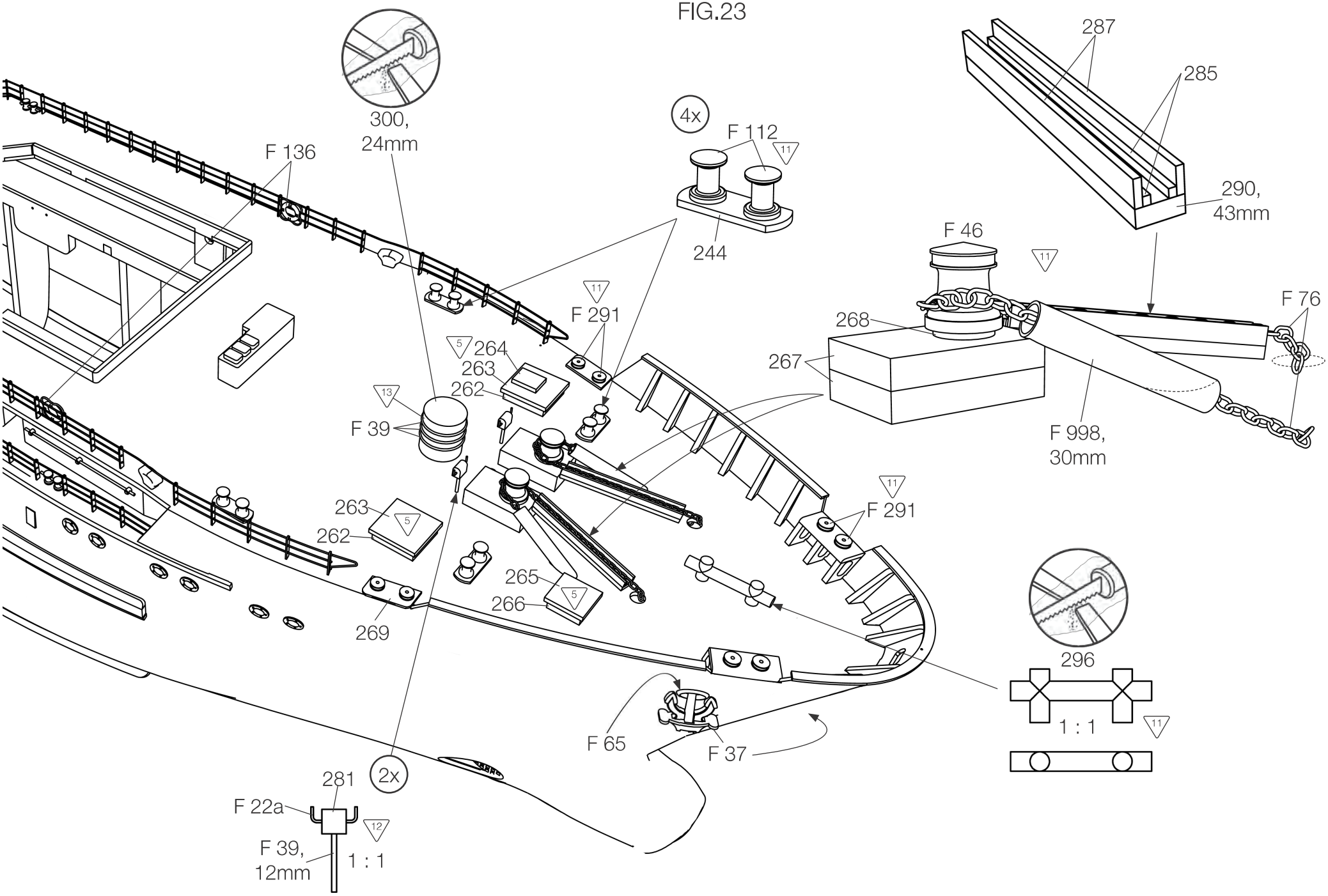
300,
24mm
F 136
4x
F 112
244
287
285
290,
43mm
F 46
F 76
268
267
F 998,
30mm
F 291
264
263
262
F 39
263
262
265
266
269
F 65
F 37
296
1 : 1
2x
281
F 22a
F 39,
12mm
1 : 1

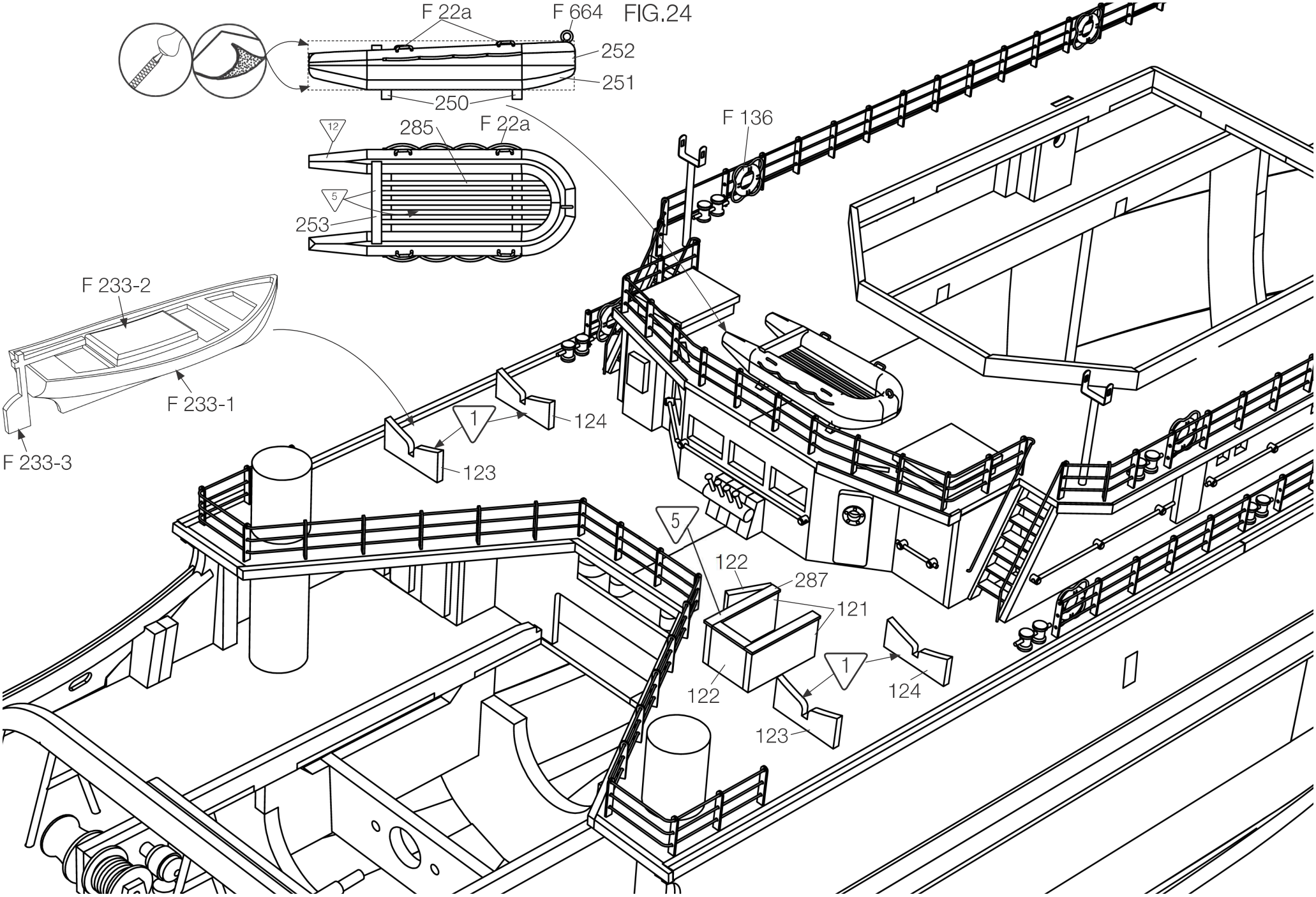
F 22a
F 664
252
251
250
285
F 22a
253
F 136
F 233-2
F 233-1
F 233-3
124
123
122
287
121
122
124
123

FIG.24

FIG.25

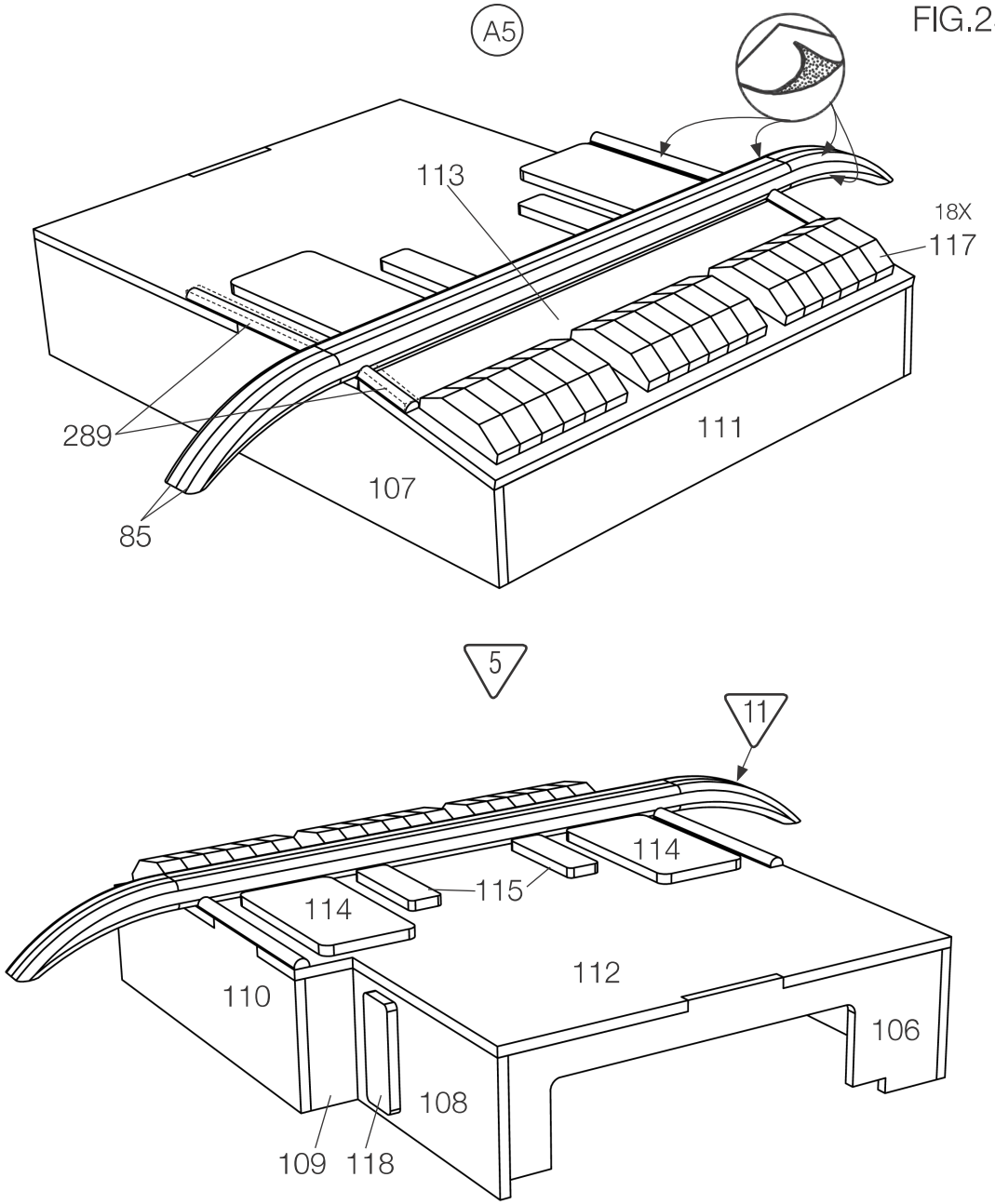
A5
113
18X
117
289
111
107
85
5
11
114
115
114
112
110
106
108
109
118

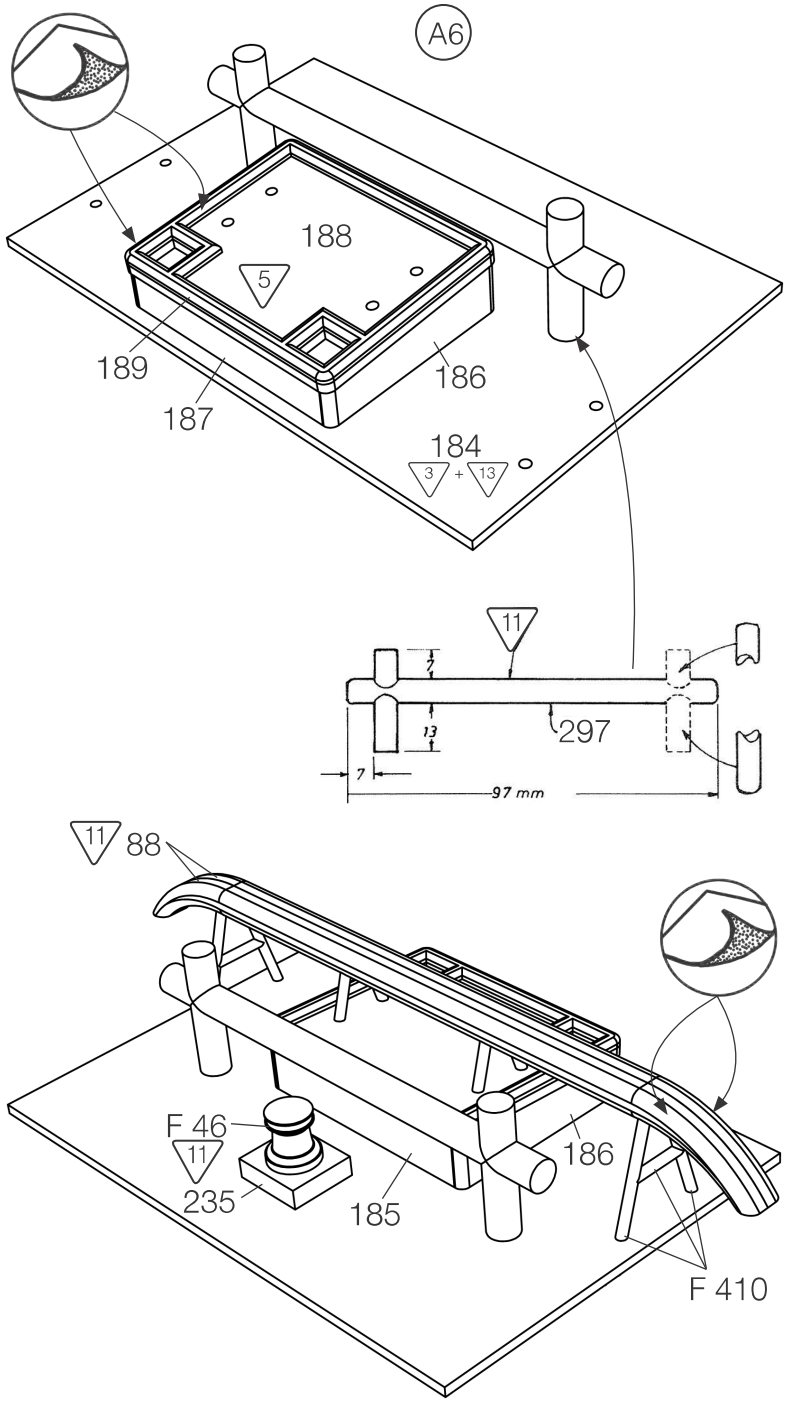
A6
188
5
189
186
187
184
3
13
11
297
7
13
7
97 mm
11
88
F 46
11
235
185
186
F 410

FIG.26

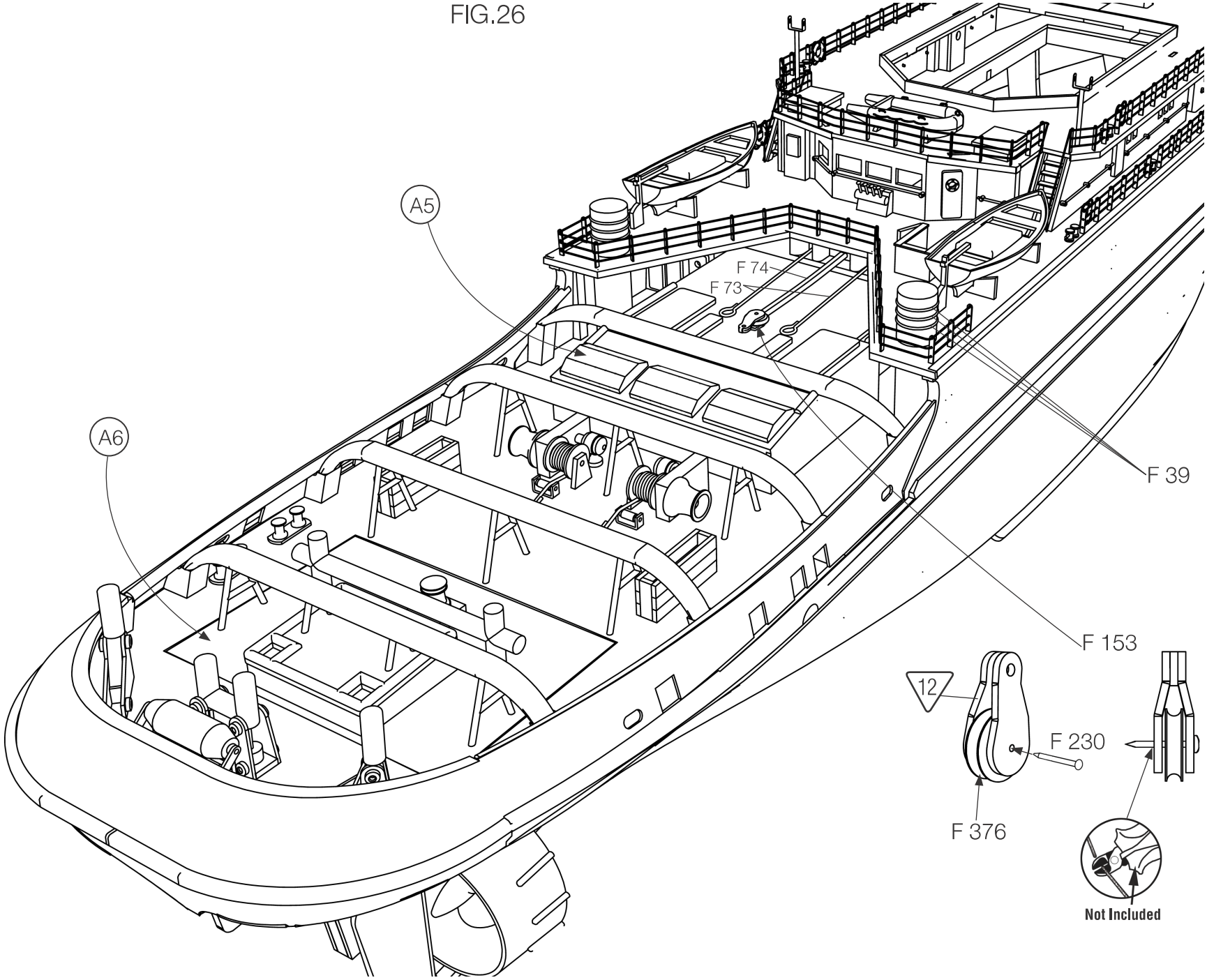

FIG.27

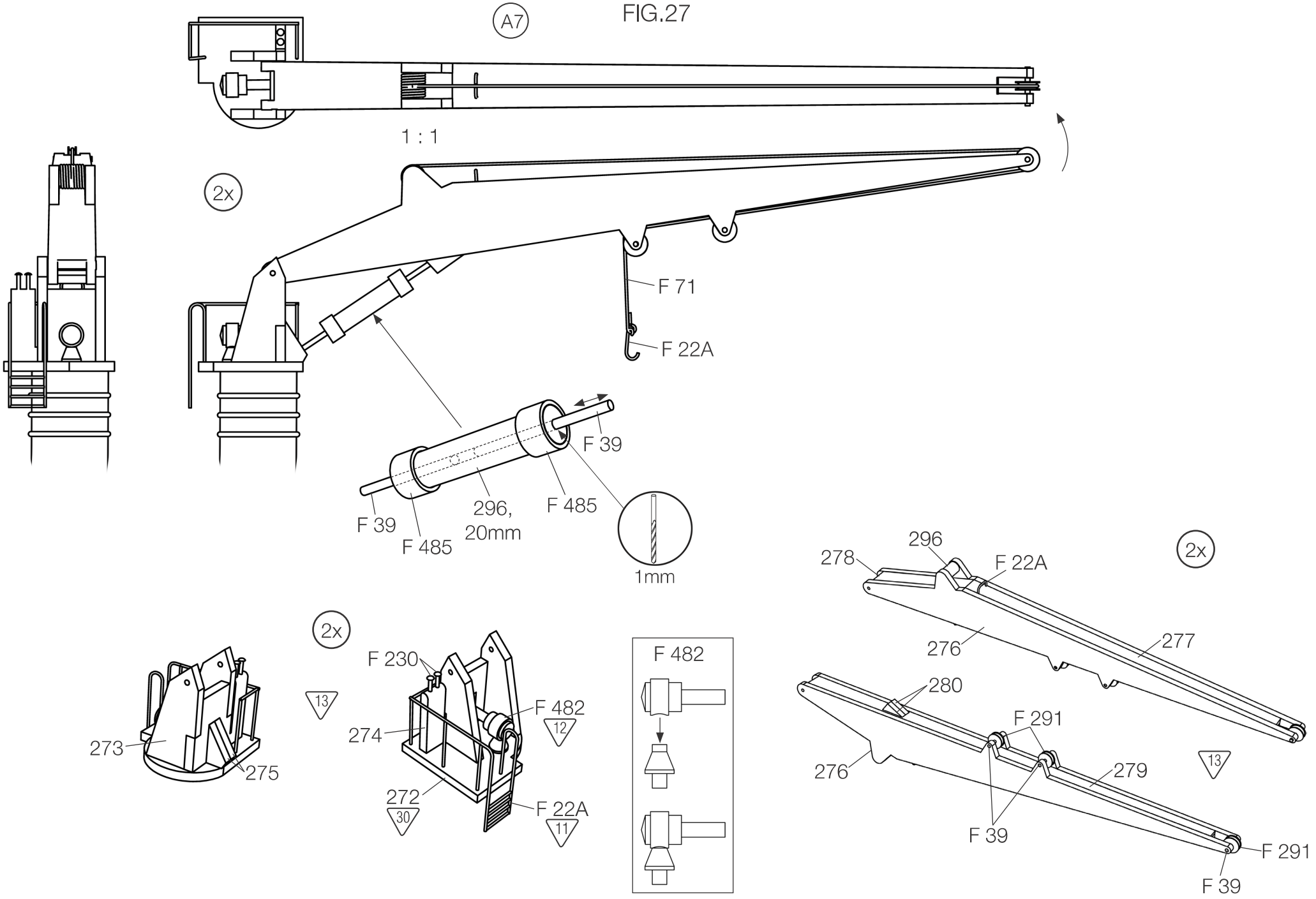
A7
1 : 1
2x
F 71
F 22A
F 39
F 485
296,
20mm
1mm
2x
273
275
2x
13
F 230
274
F 482
12
272
30
F 22A
11
F 482
278
296
F 22A
2x
276
277
280
F 291
276
279
13
F 39
F 291
F 39

FIG.28

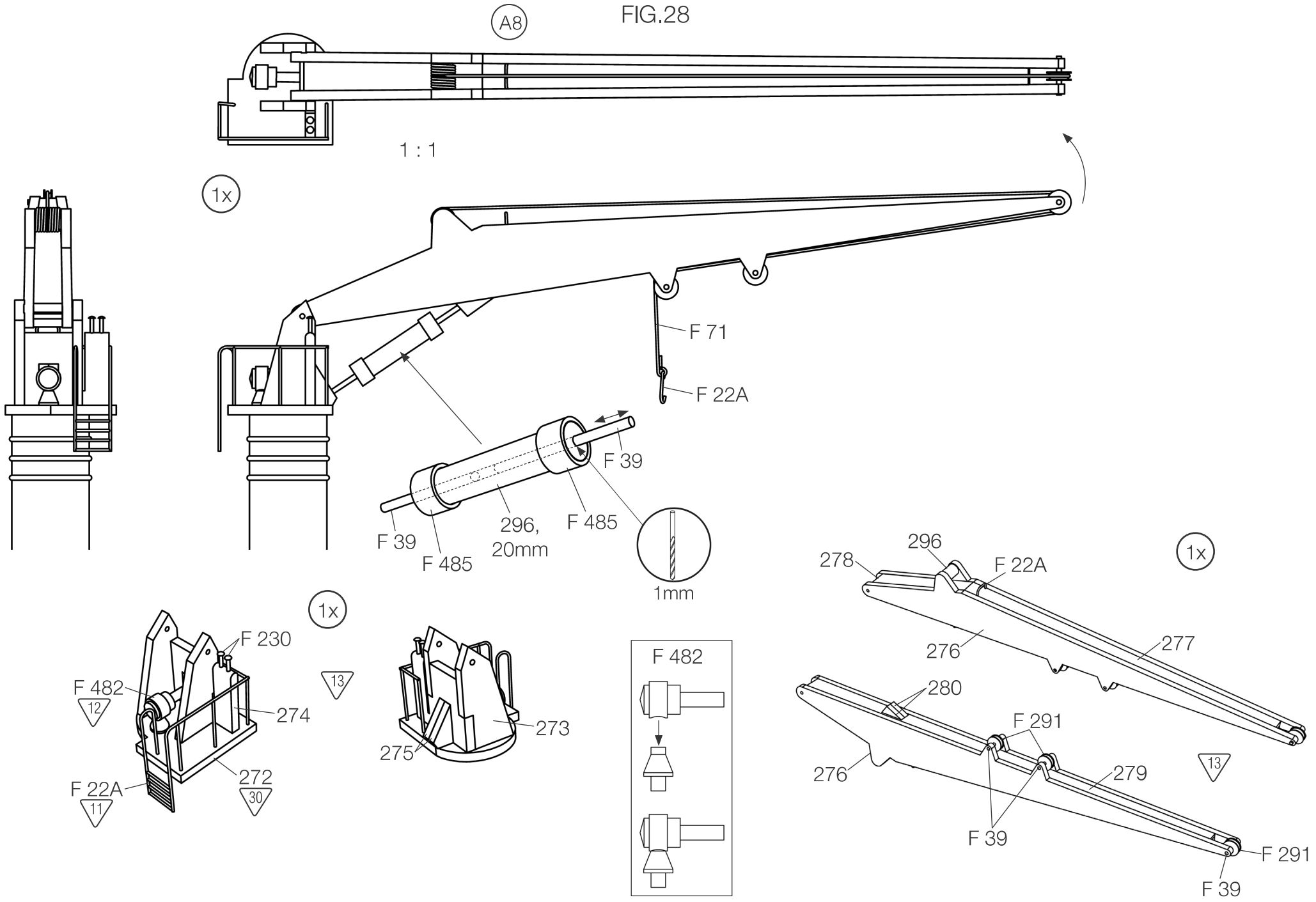
A8
1 : 1
1x
F 71
F 22A
F 39
F 39
F 485
296,
20mm
F 485
1mm
1x
F 230
F 482
12
274
13
F 22A
11
272
30
275
273
F 482
278
296
F 22A
1x
276
277
280
F 291
276
279
13
F 39
F 291
F 39

FIG.29

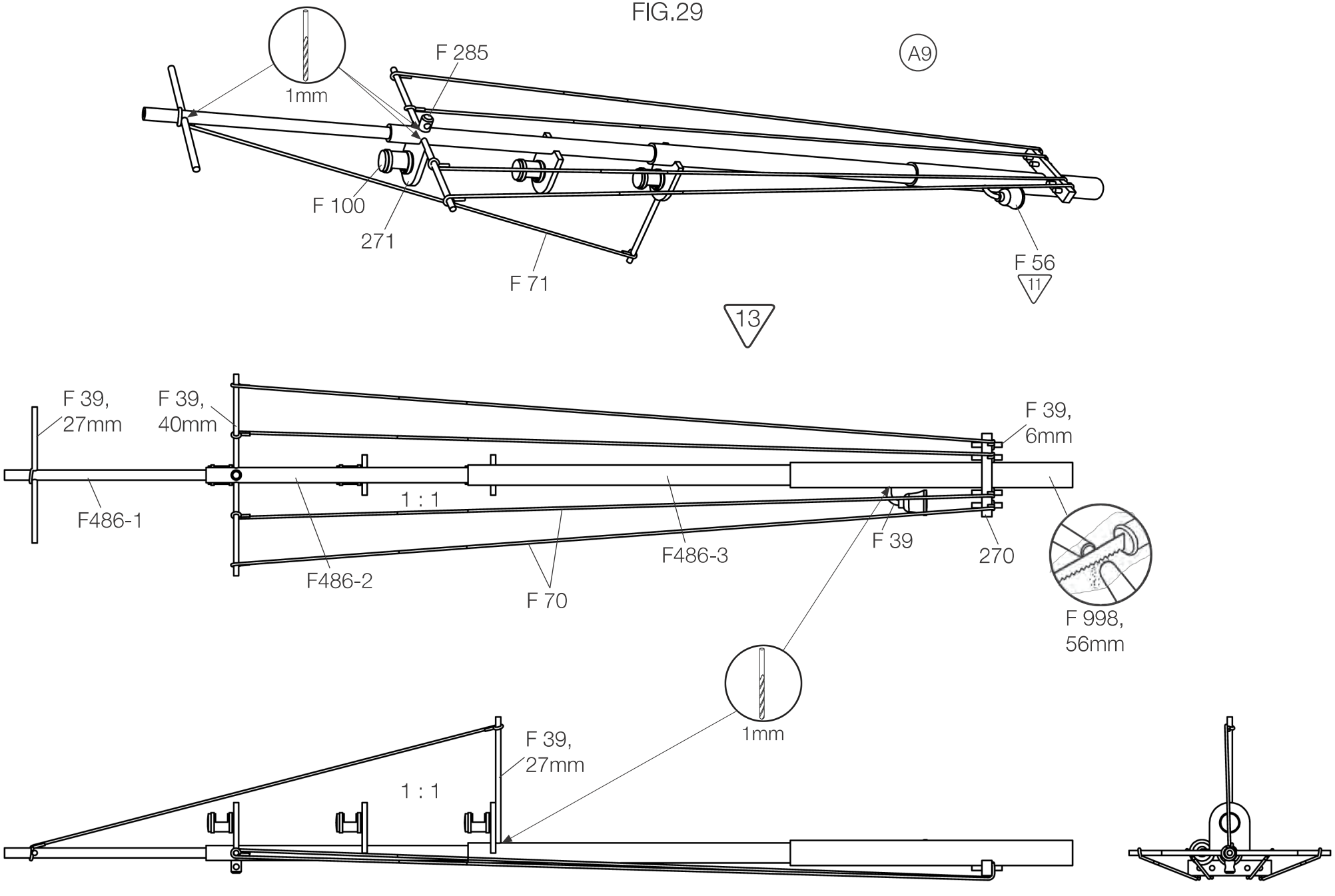
1mm
F 285
A9
F 100
271
F 71
F 56
11
13
F 39,
27mm
F 39,
40mm
F 39,
6mm
F486-1
1 : 1
F486-2
F 70
F486-3
F 39
270
F 998,
56mm
1mm
F 39,
27mm
1 : 1

FIG.30

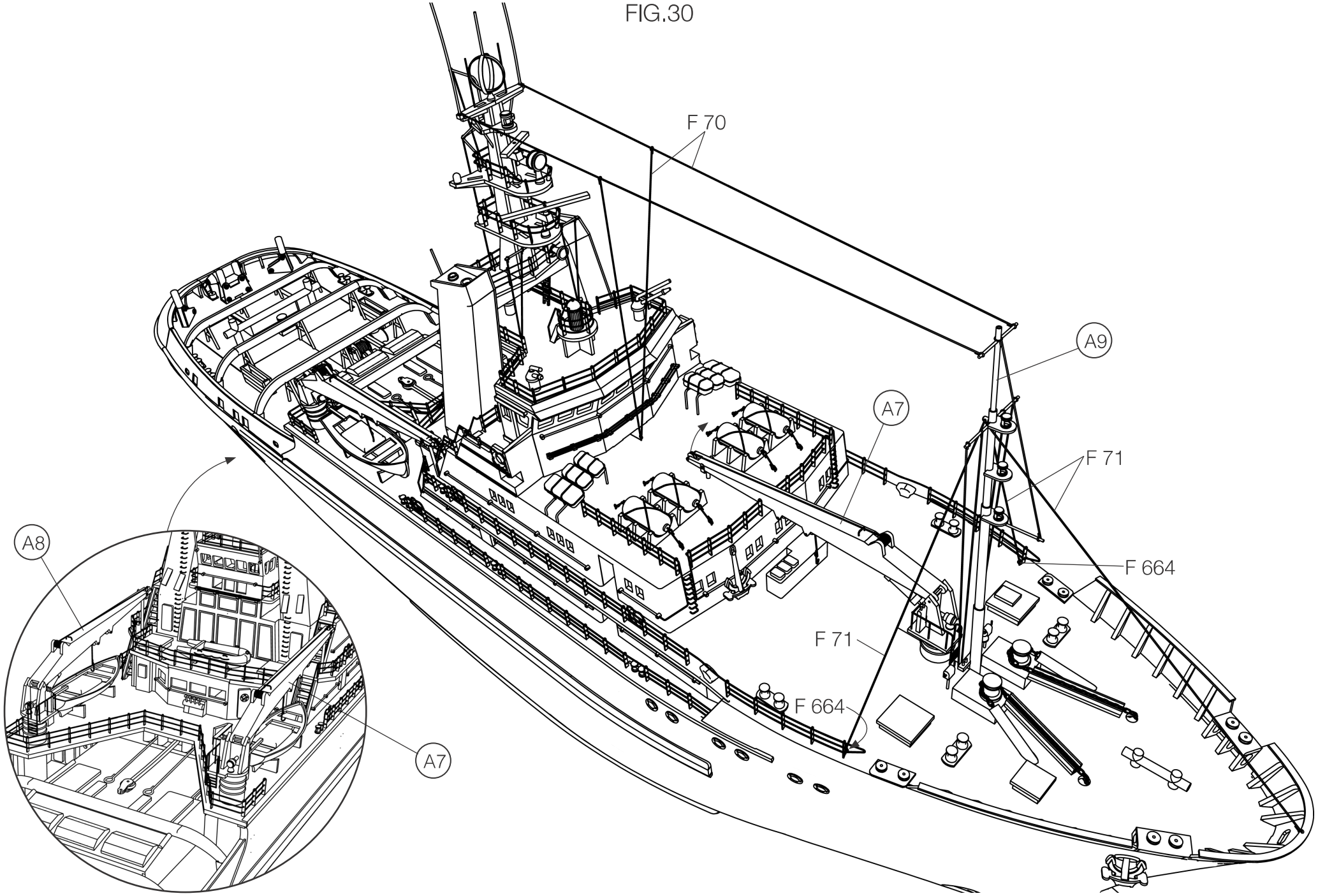

FIG.31

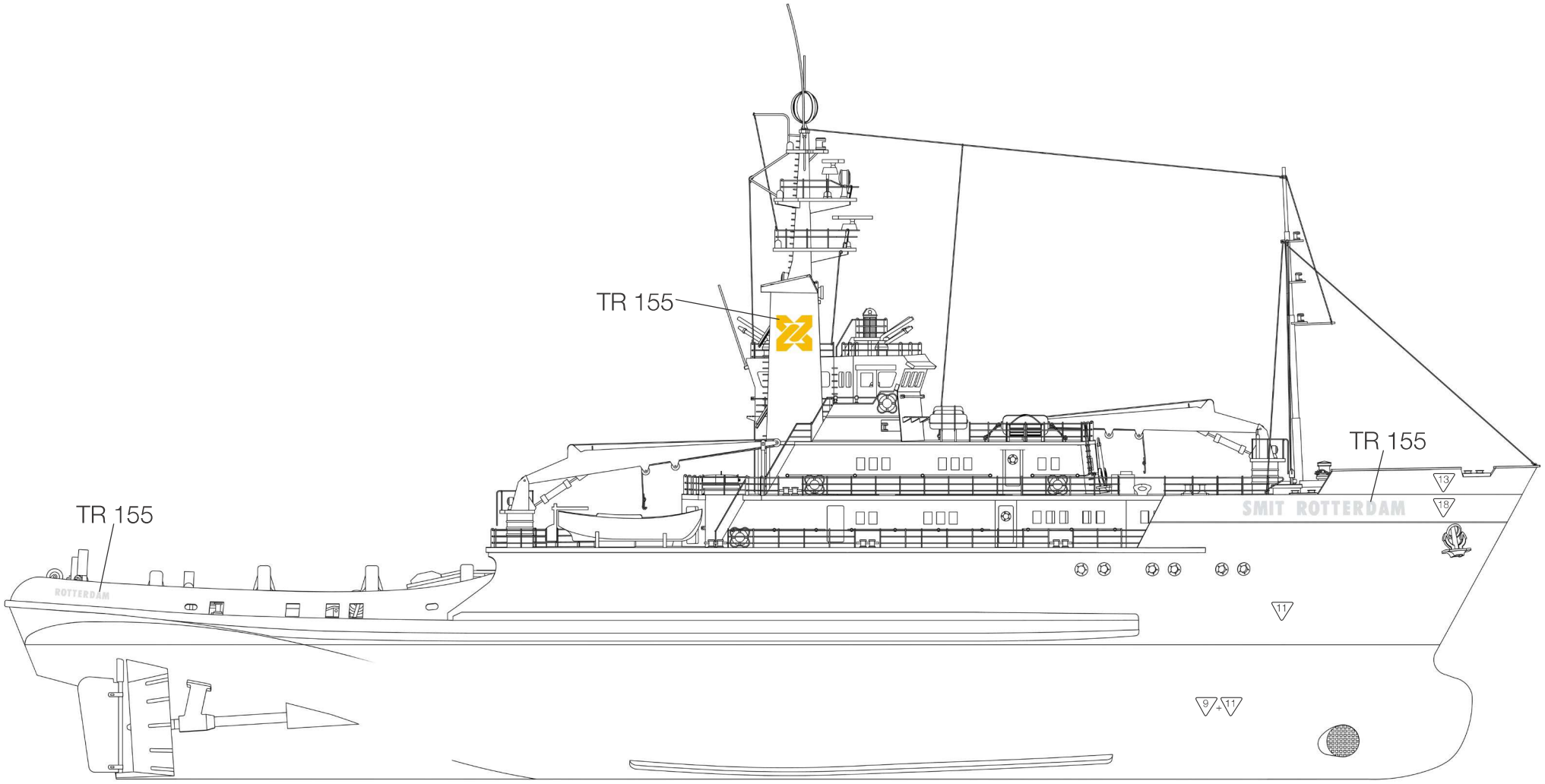

DK

Symboler  = Rigningsnummer

 = Farvenummer



= Bejdse

GB

Symbols  = Rigging No

 = Colour Nor



= Stain

D

Zeichen  = Takel Nr.

 = Farben Nr



= Beize

F

Symboles  = Greement no.

 = Couleur no.



= Mordant

NL

Symbolen  = Tuigage Nr.

 = Kleur Nr.



= Beits

E

Símbolo  = Oparejo Nr.

 = Color Nr.



= Mordiente

I

Segno  = Attrezzatura No

 = Colore No



= Inchiostro tint.

P

Simbolos  = Cordame no

 = Cõr no



= Tintura

Til denne model er mahogni bejdse og farver med følgende numre nødvendige:
For this model is mahogany stain and colours with the following numbers should be used:
Für dieses Modell sind Mahagoni Beize und Farben mit den folgenden Nummern notwendig:
Pour ce modèle, le mordant et les couleurs avec les numéros suivants doivent être employées:
Voor dit model zijn kleuren met de volgende nummers nodig:
Para est modelo se necesitan mordiente et colores con los siguientes nùmeros:
Per questo modello occorrono inchiostro tinteggiatore ”mogano” e colori con questi numeri:
Pinte o modelo com tintura cõr Mogno e as cõres sugeridas da Billing Boats:

Billing Boats farver/colours

Billing	1	=	White
Billing	3	=	Emerald
Billing	5	=	Tan
Billing	9	=	Bright Red
Billing	11	=	Black
Billing	12	=	Pale Grey
Billing	13	=	Trainer Yellow
Billing	15	=	Silver
Billing	18	=	Mediterranean Blue
Billing	30	=	Dark Ad Grey
Billing	35	=	Signal Red

R/C KIT (BRC4781) ILLUSTRATED AS
GRAY ARE NOT INCLUDED IN KIT

R/C Diagram

