820 Mayflower

Mastplan

50-50059-3

1:1

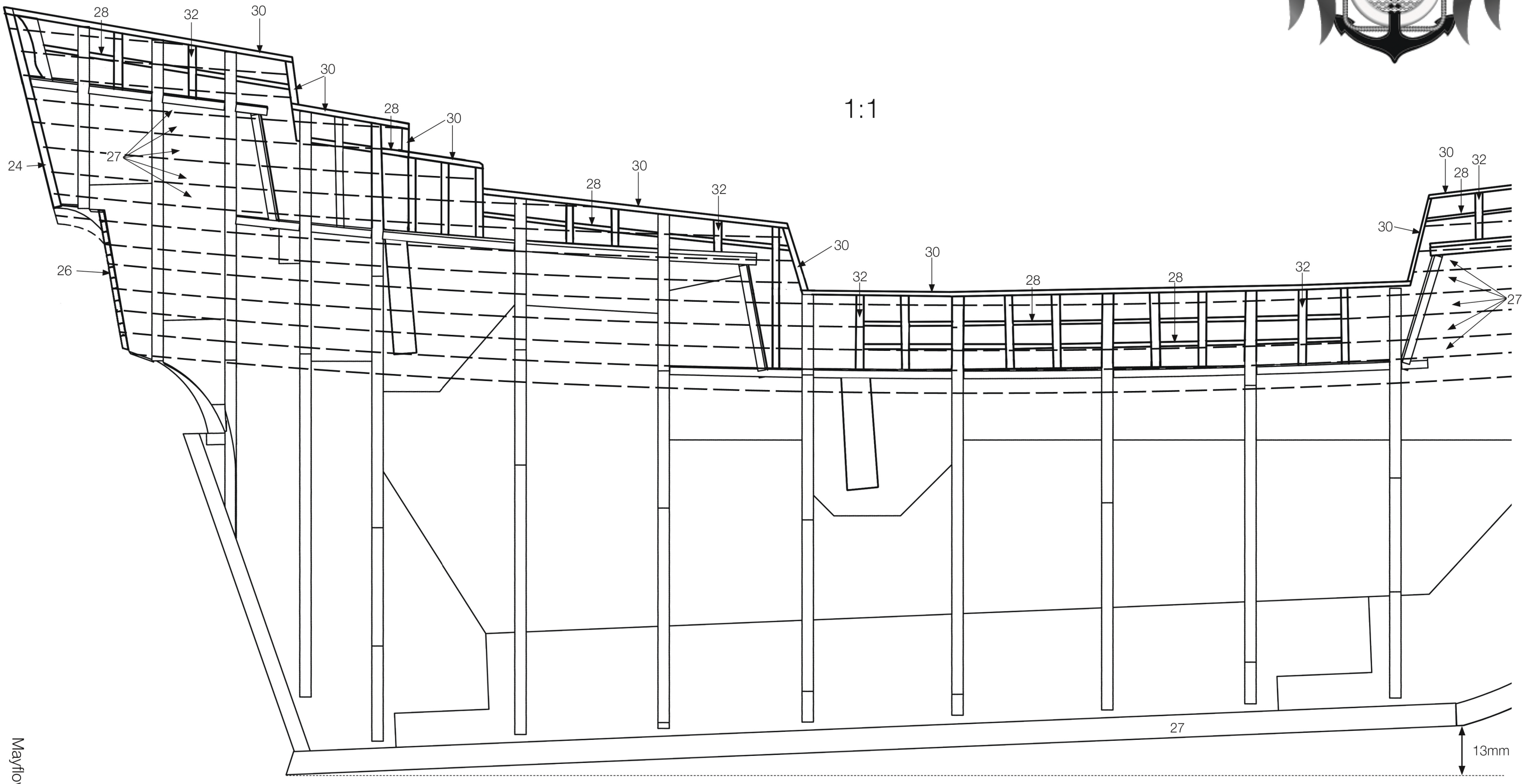

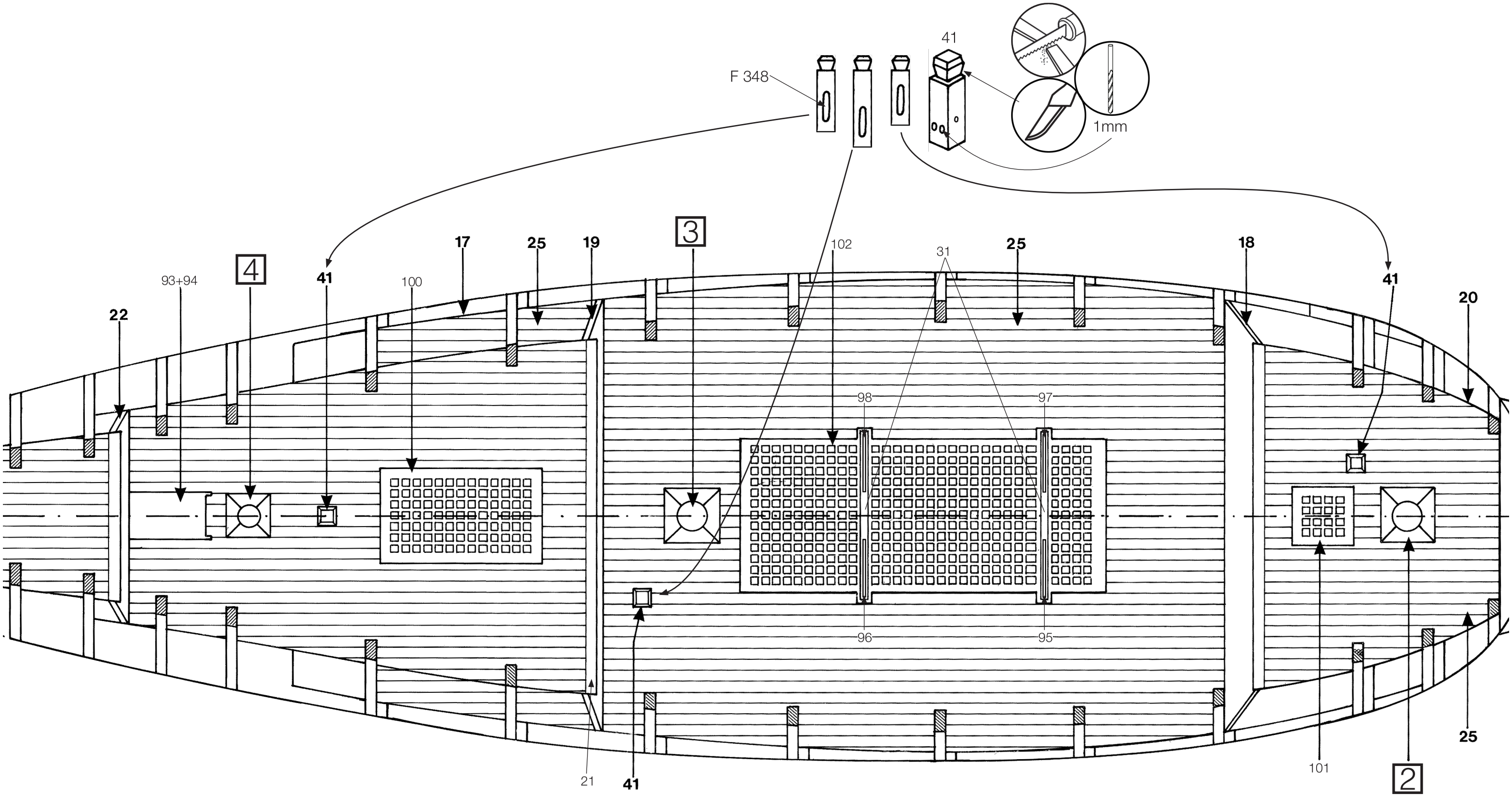
F 348
41
1mm
3
4
2
17
25
19
102
31
25
18
41
20
22
93+94
41
100
98
97
96
95
21
41
101
25

1:1

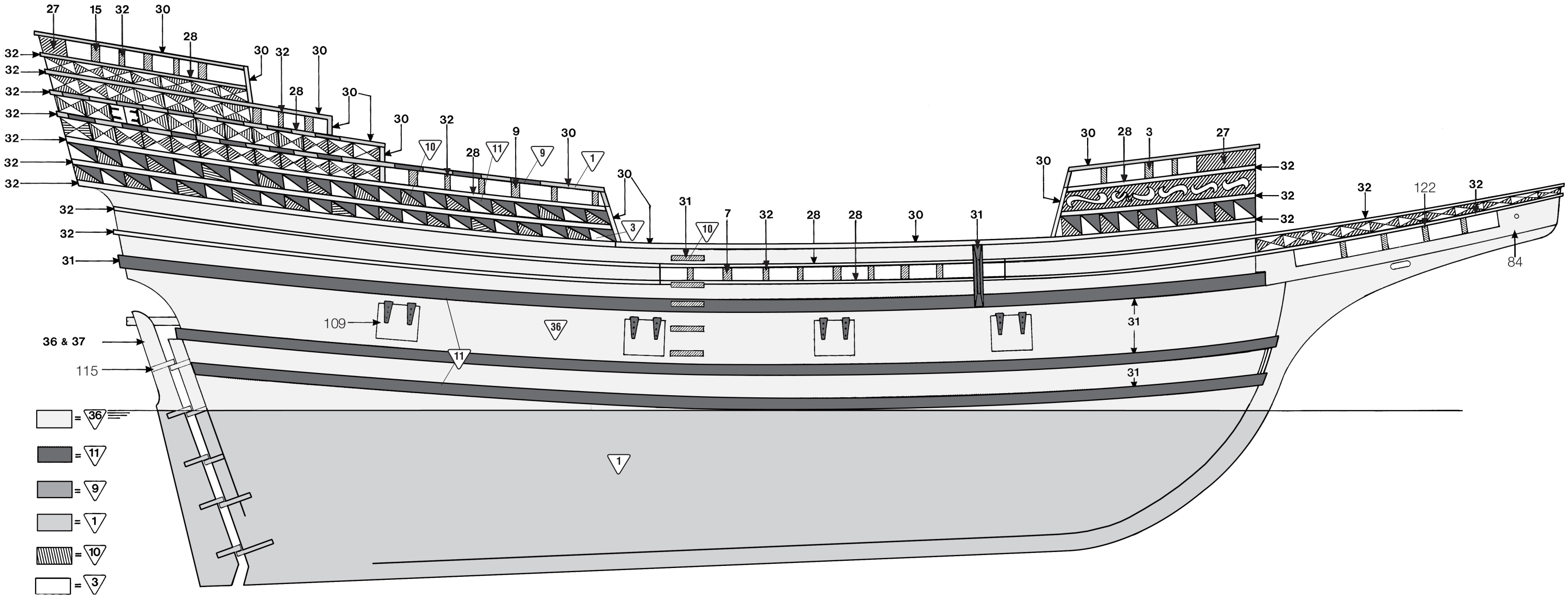

Billing	1	=	White
Billing	3	=	Emerald
Billing	5	=	Tan
Billing	9	=	Bright Red
Billing	10	=	Matt Lemon
Billing	11	=	Black
Billing	17	=	Clear Poly
Billing	36	=	Bejdse/Stain/Beize/Mordant/Beize/Mordient

1 BOWSPRIT 1:1

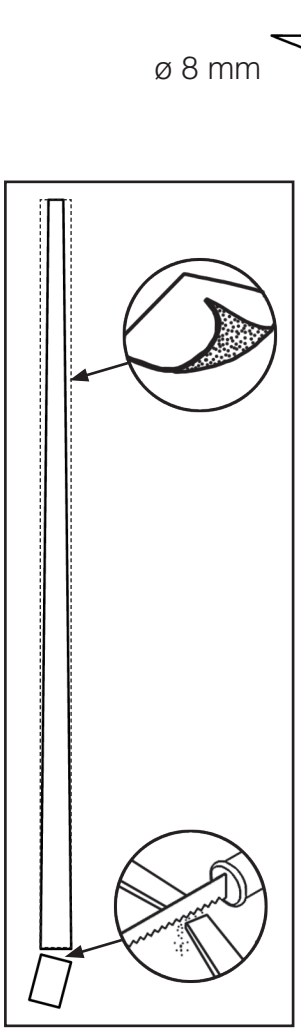

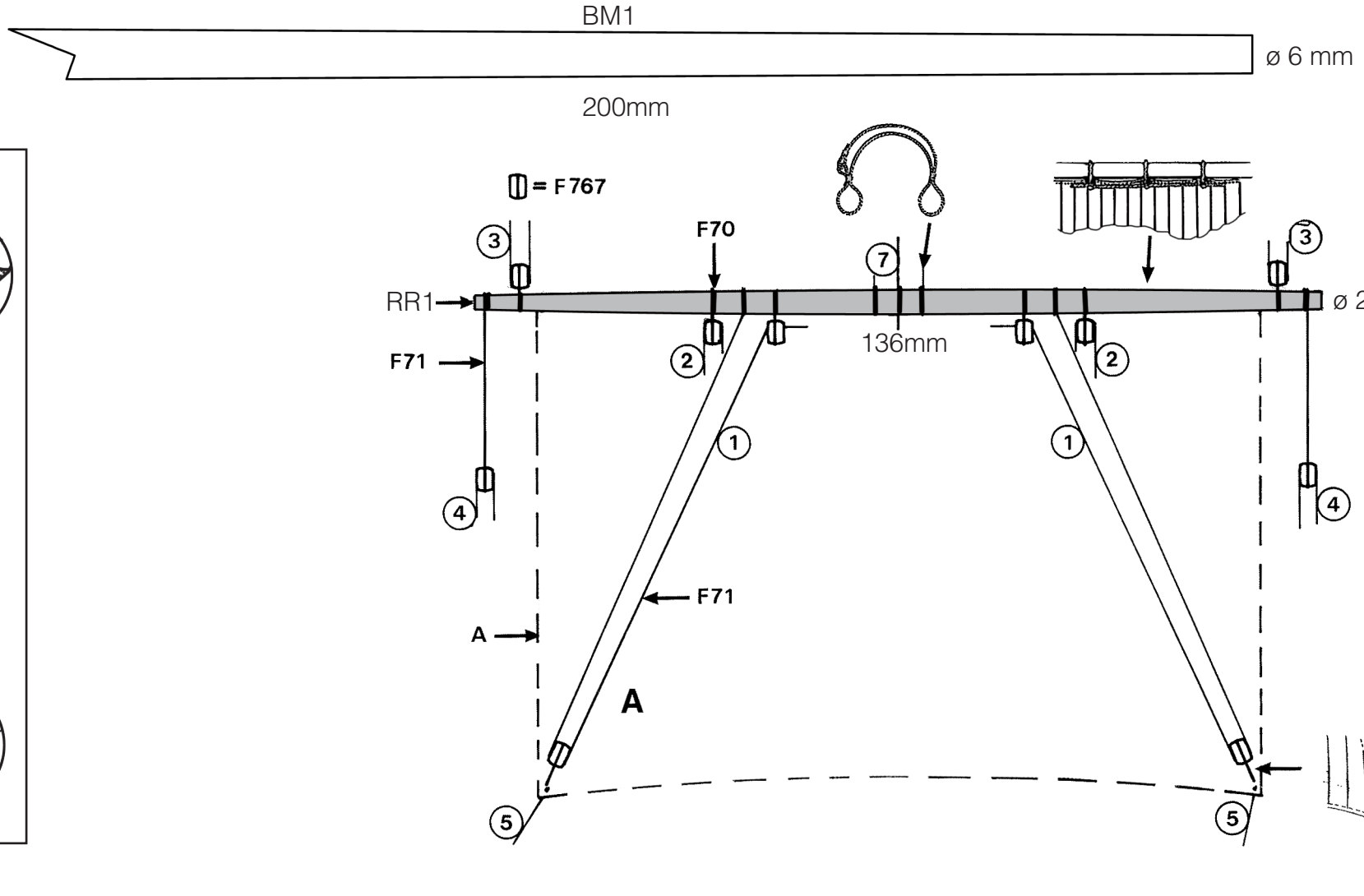

2 FORE MAST 1:1

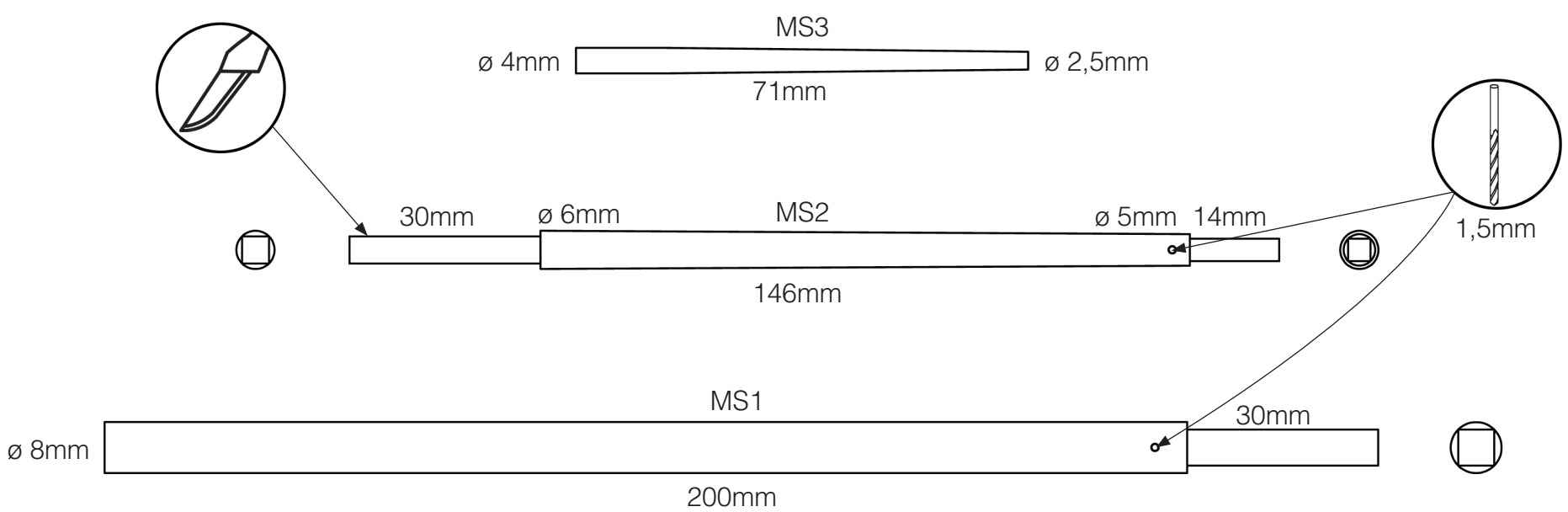

3 MAIN MAST 1:1

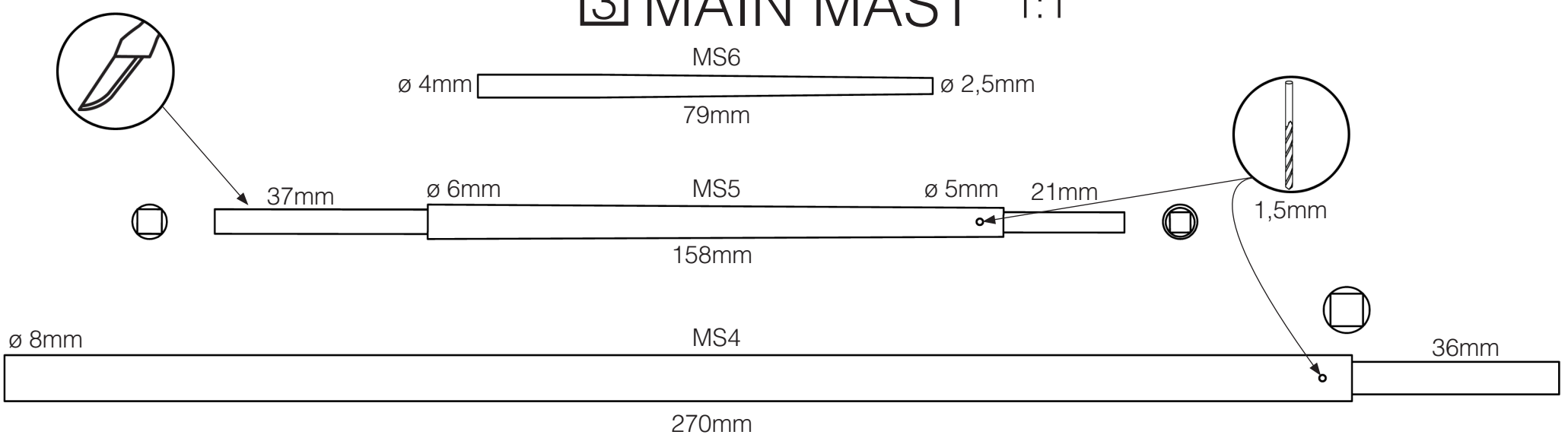

4 MIZZEN MAST 1:1

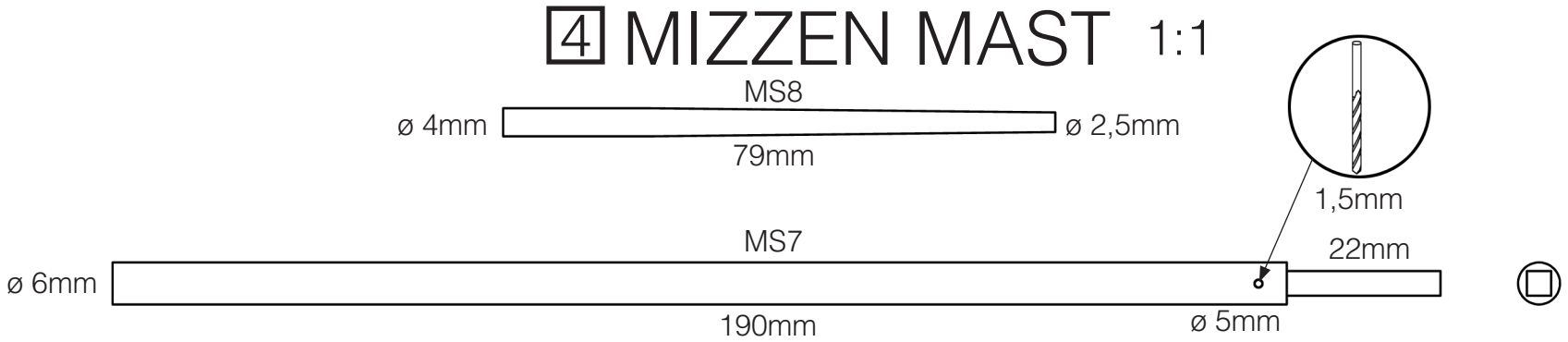

4 MIZZEN MAST

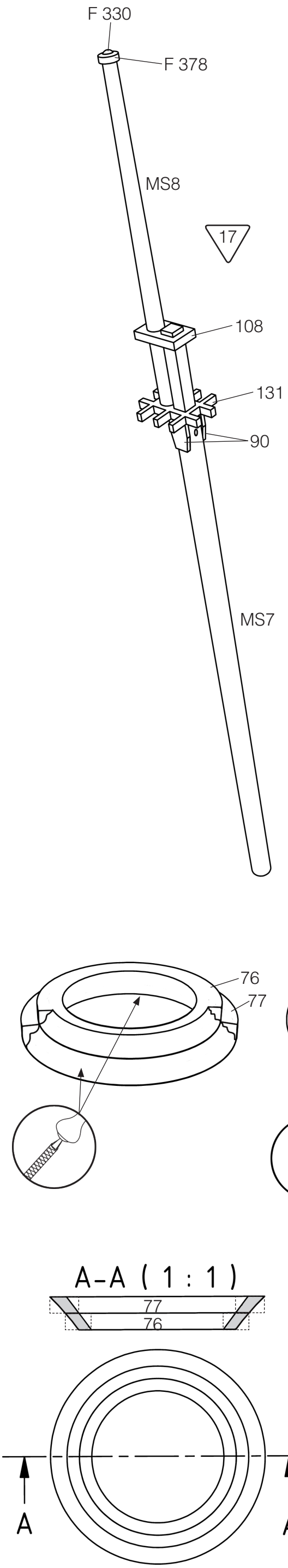

3 MAIN MAST

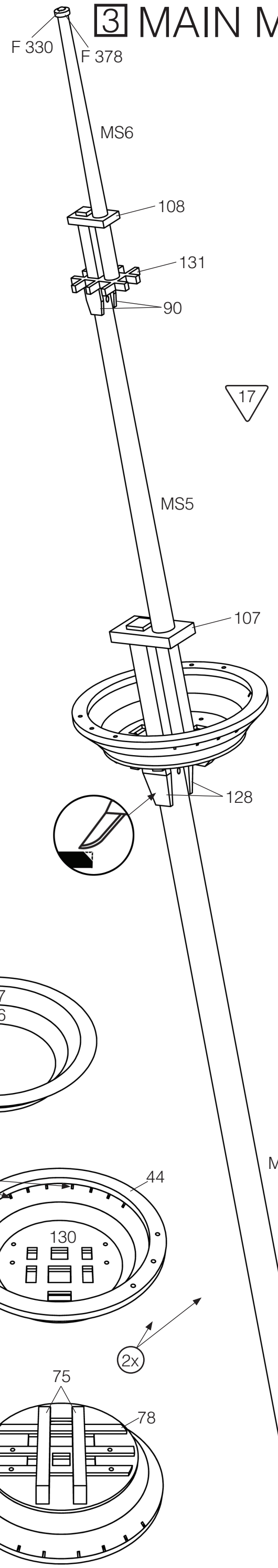

2 FORE MAST

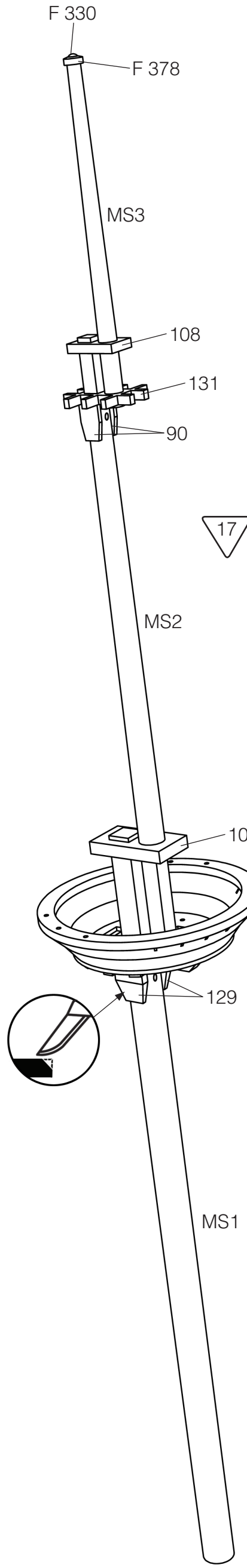

2 FORE MAST

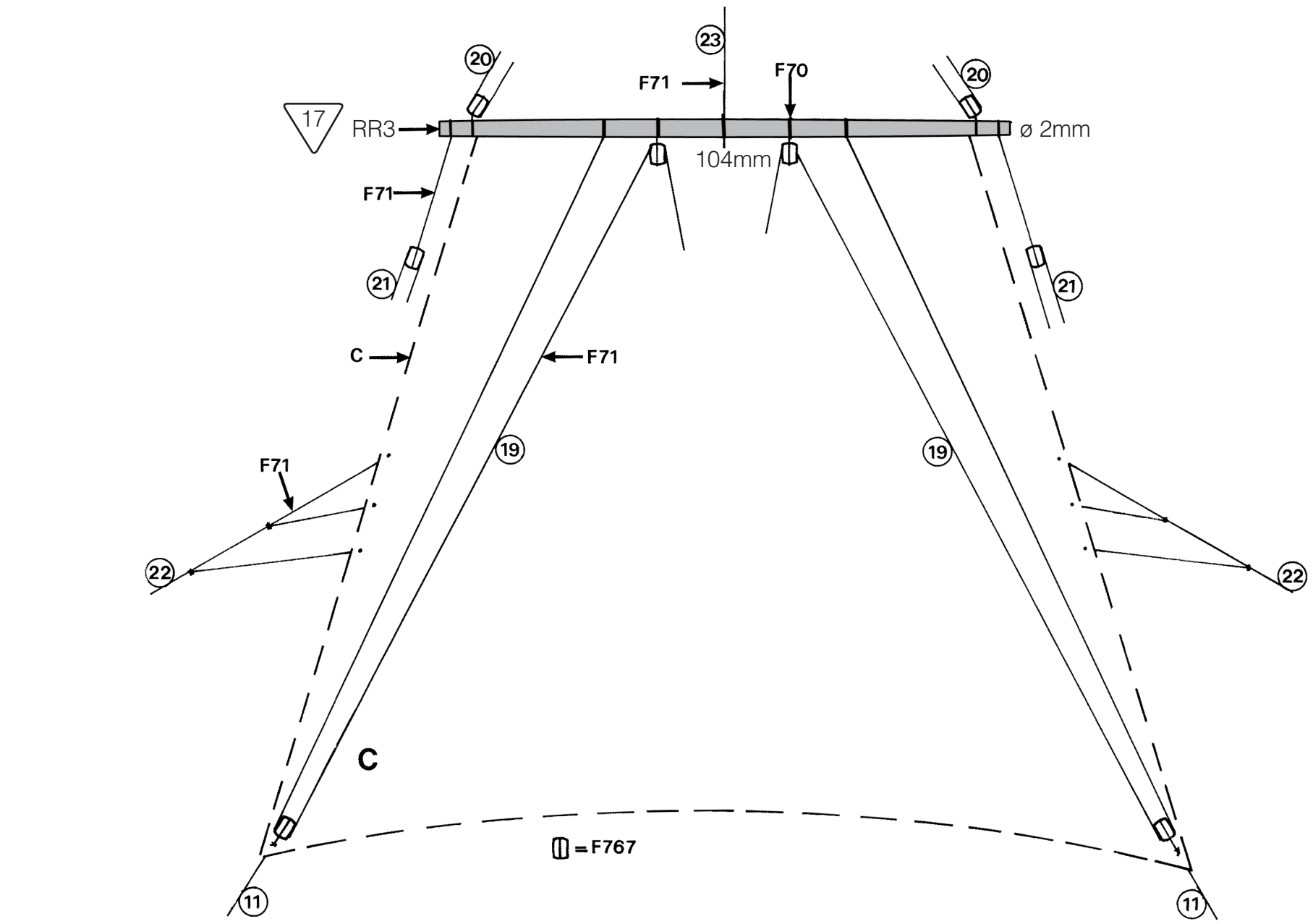

1:1

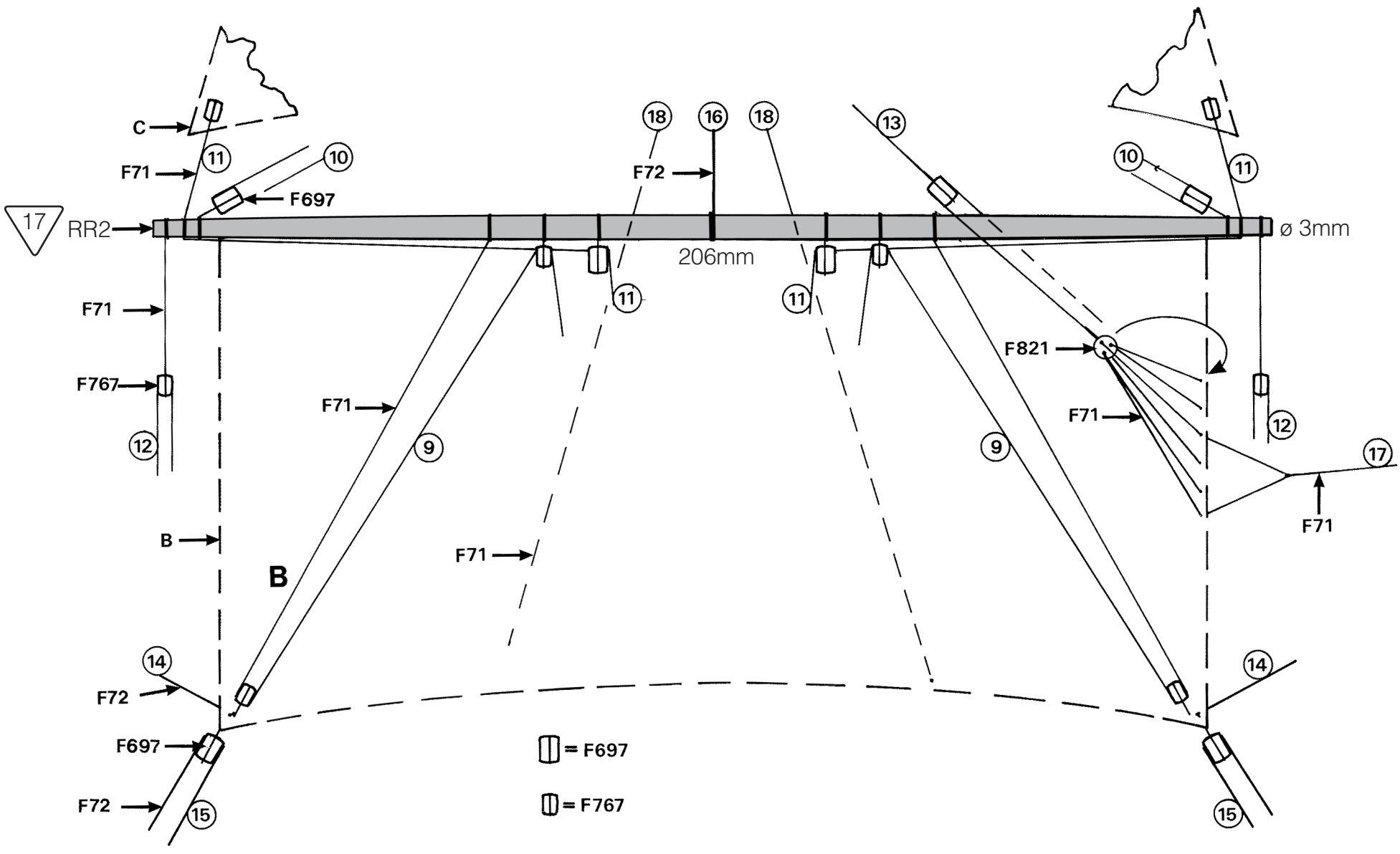

3 MAIN MAST

1:1

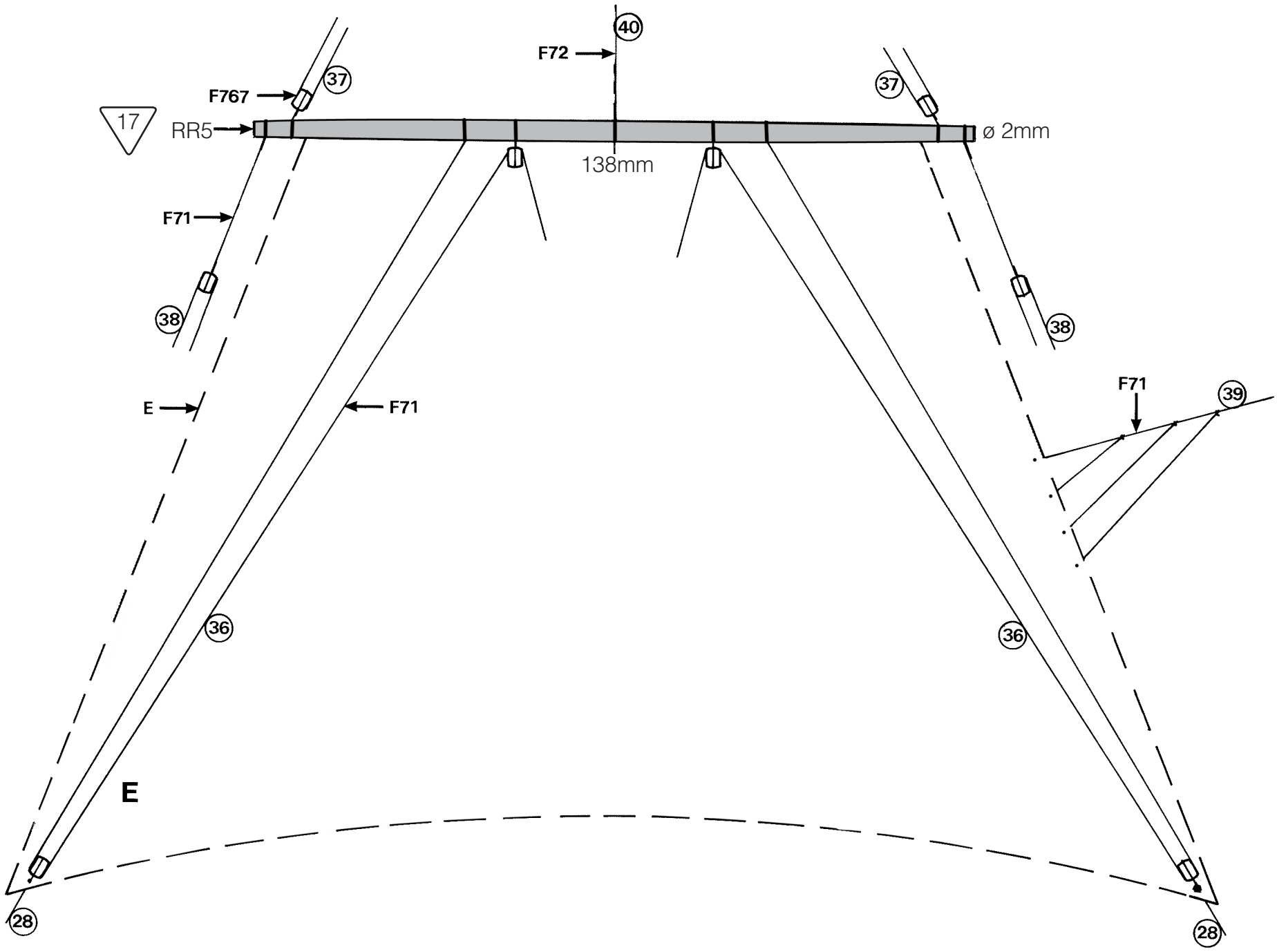

3 MAIN MAST

1:1

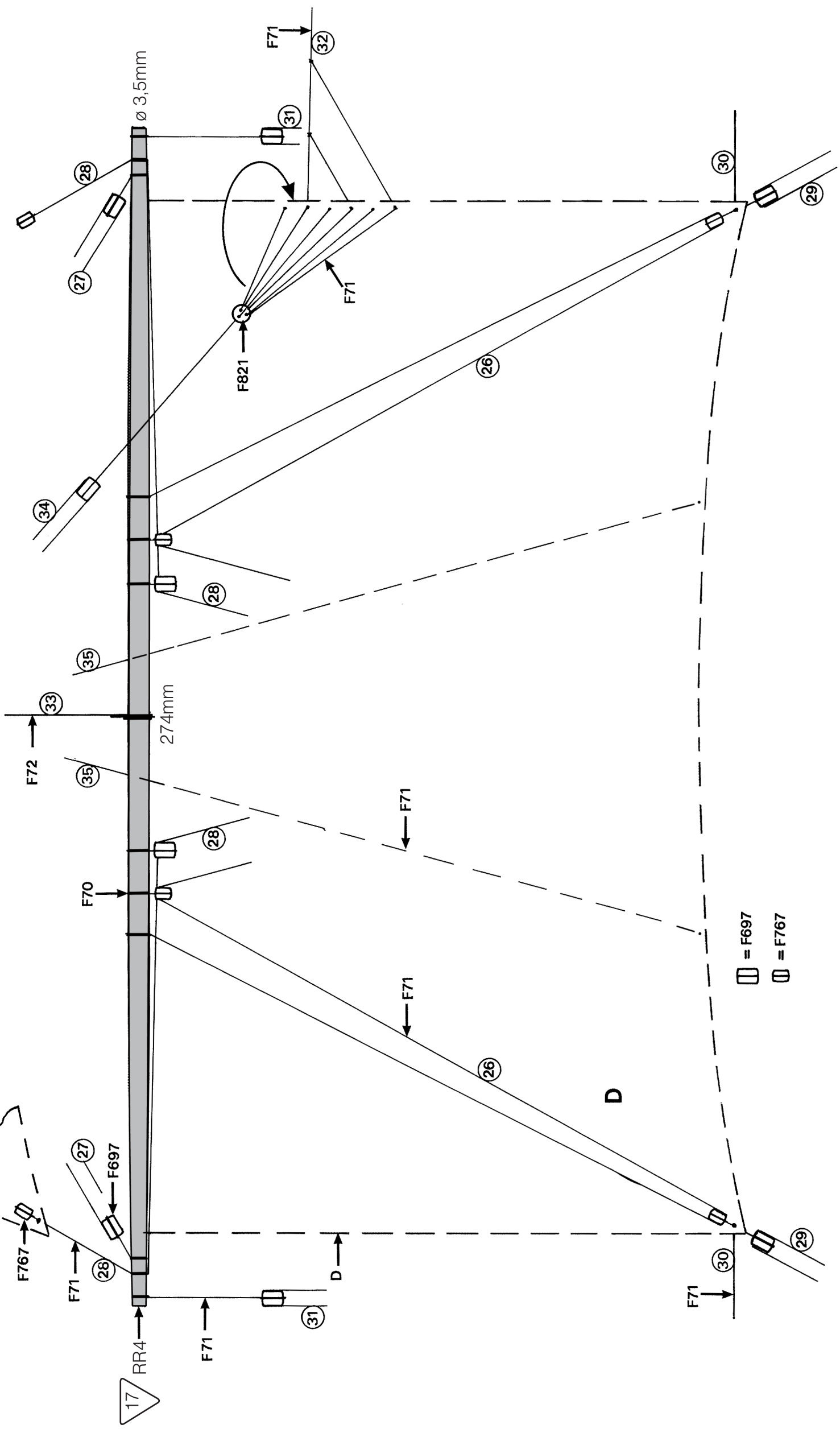

4 MIZZEN MAST

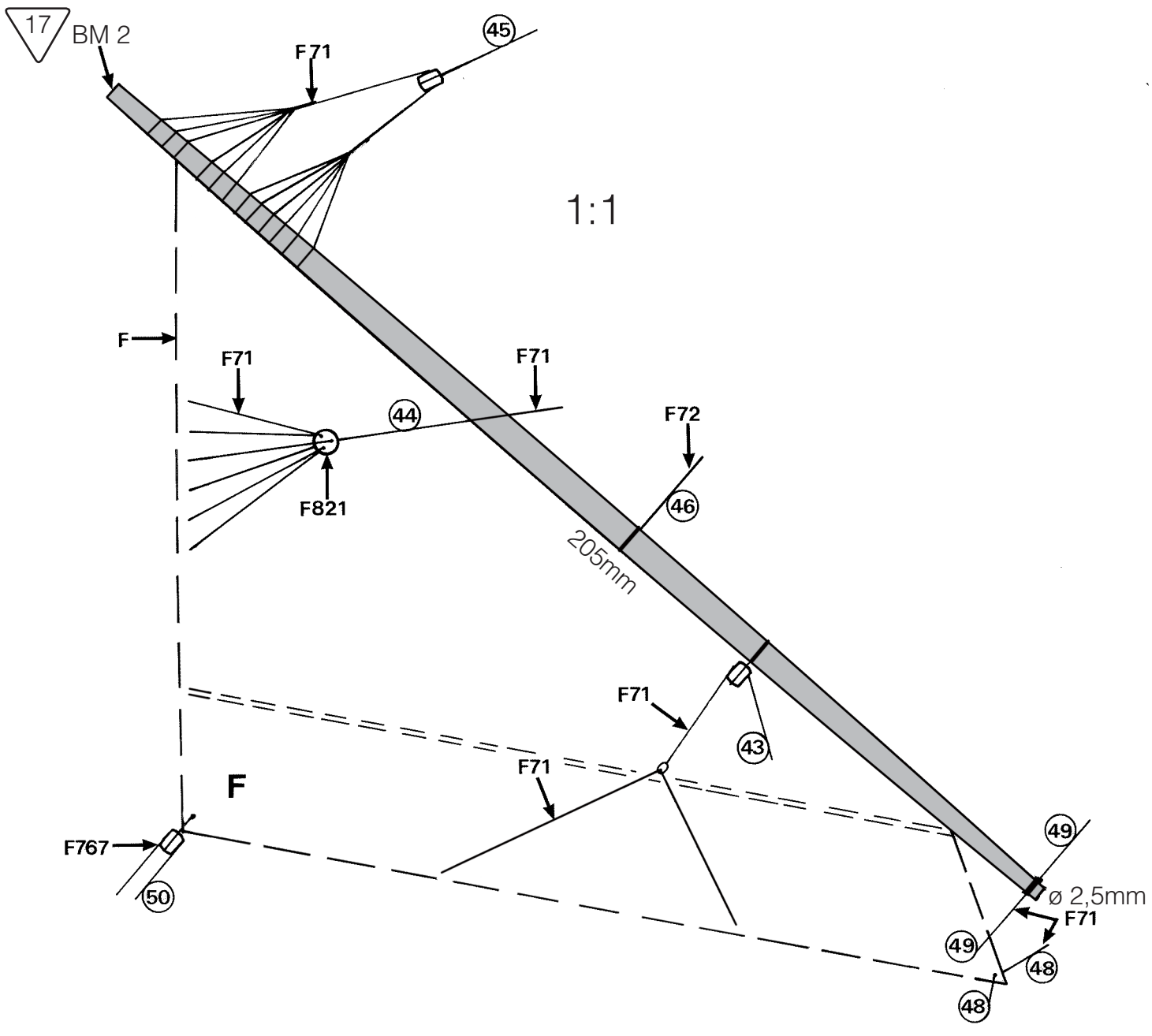

BM 3

1:1

ø 2,5mm

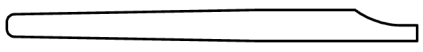

54mm

17

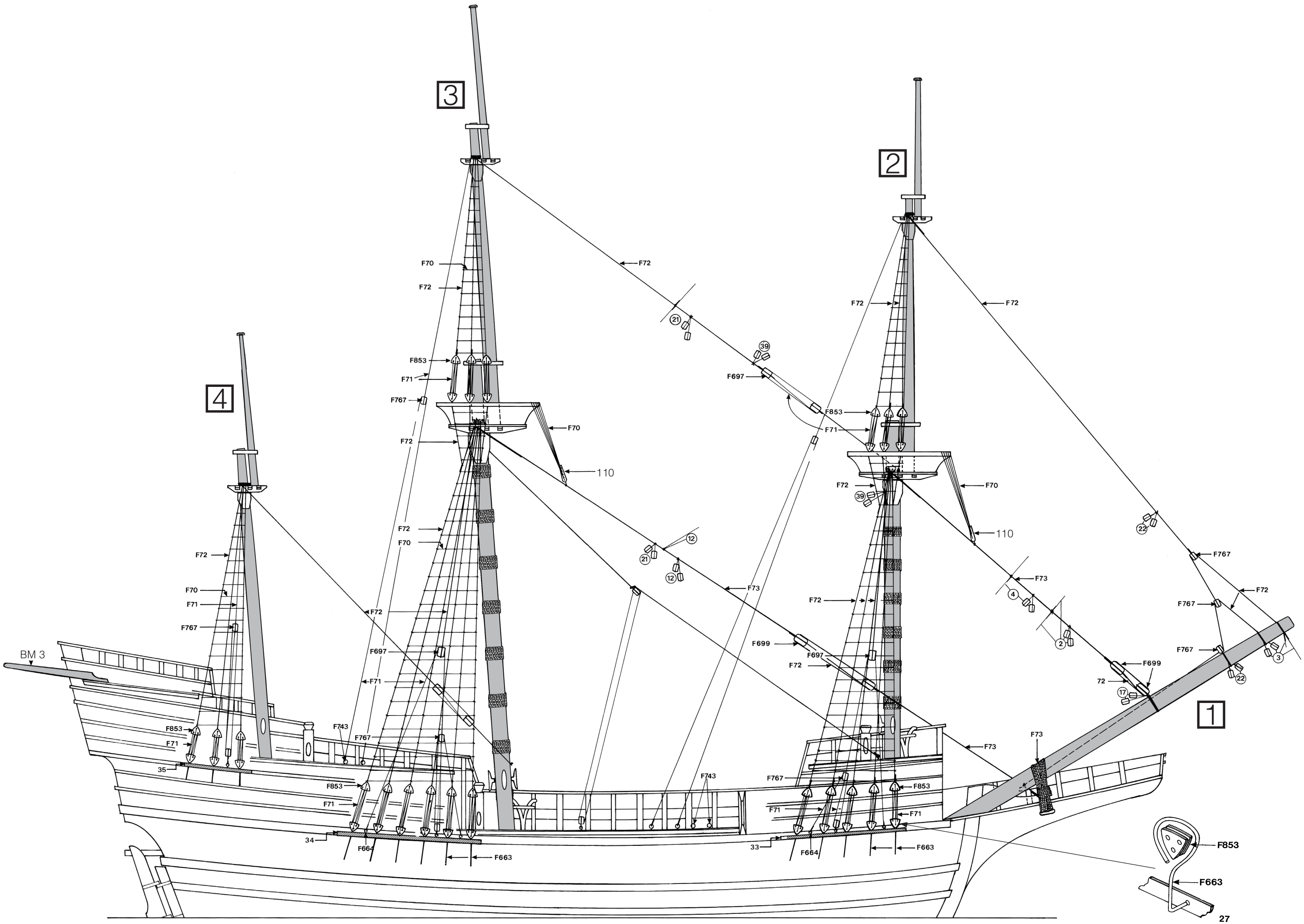
3
2
4
1
BM 3
F70
F72
F853
F71
F767
F743
F697
F699
F664
F663
F73
110
35
34
33
72
21
39
12
4
2
22
17
3

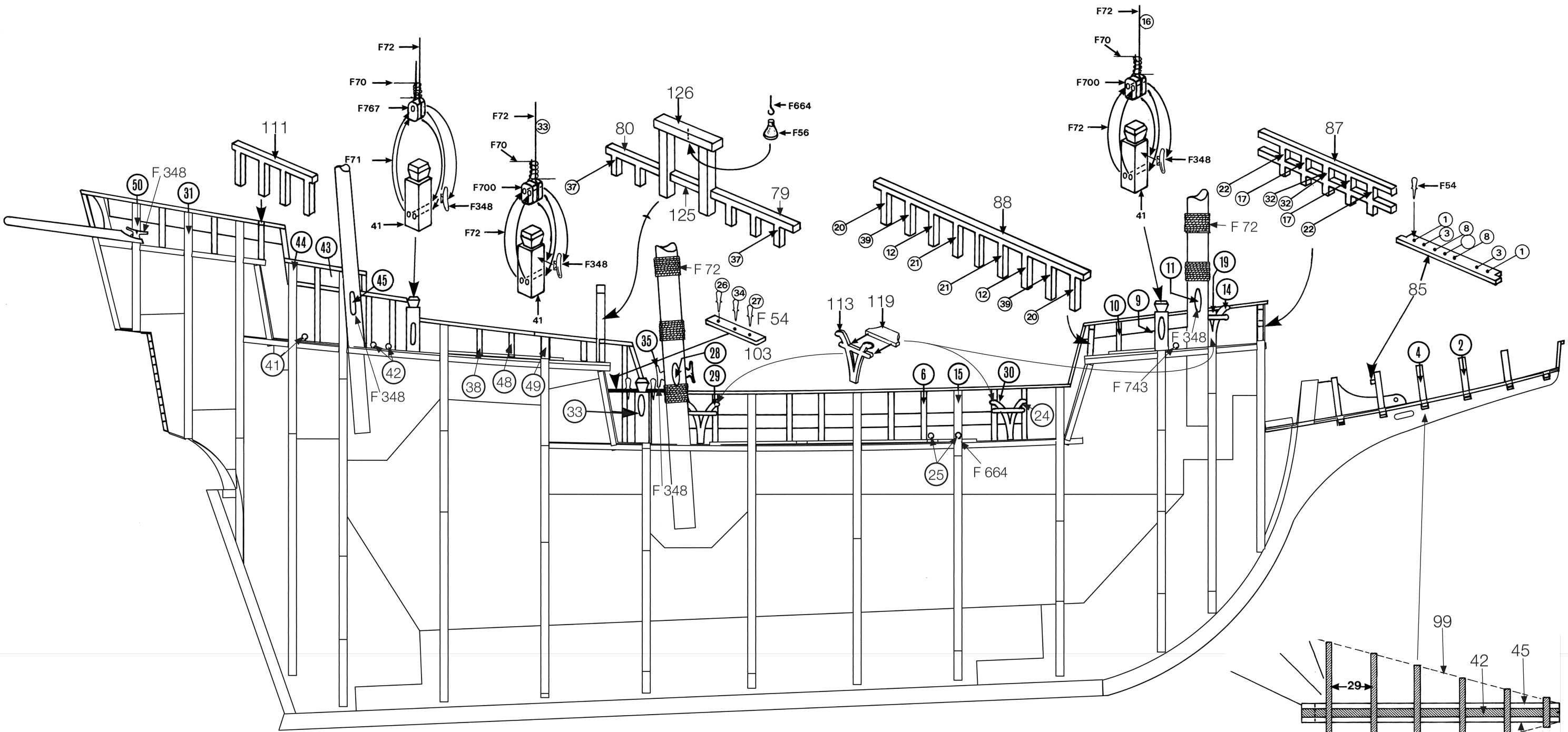

F72
F70
F767
F71
F348
41
111
F 348
50
31
44
43
45
42
38
48
49
F72
33
F70
F700
F72
F348
41
126
80
37
125
79
37
F664
F56
F 72
26
34
27
F 54
103
35
28
29
33
113
119
6
15
30
24
25
F 664
F 348
88
20
39
12
21
21
12
39
20
F72
16
F70
F700
F72
F348
41
87
22
17
32
32
17
22
F 72
11
19
14
10
9
F 348
F 743
F54
1
3
8
8
3
1
85
4
2
99
42
45
29
45