Billing Boats®

	8020	Billing Boats - Denmark
	Norske Løve ”437” *General Drawing 1*	Drawing no. 50-50007

NORSKE LÖVE

Billing Boats®

	8021	Billing Boats - Denmark
	Norske Løve "437" *General Drawing 2*	Drawing no. 50-50007

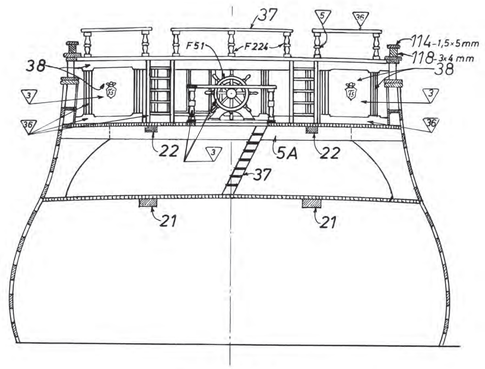

SNIT A A

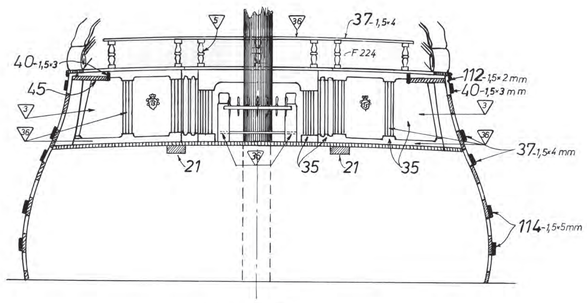

SNIT B B

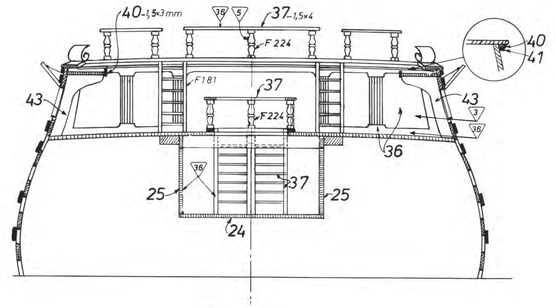

SNIT C C

