# Fairmount Alpine “506” **

BUILDING INSTRUCTION




This model is Copyright protected.
All Copyrights to this version of the
Fairmount Alpine belongs to
Billing Boats Denmark Aps

www.billingboats.com

50-51103 291121

## DK

For at opfylde de højeste kvalitetskrav pålagt af sin verdensomspændende kundekreds har Fairmount Marine bestilt ikke mindre end fem nye 205 tons pullerttræk langdistance slæbefartøjer med tung ankerhåndtering fra Niigata Shipyard i Japan. Til denne serie, blev Fairmount SHERPA med 205 tons pullerttræk, leveret og føjet til flåden i maj 2005, i oktober 2005 fulgte søsterskibet Fairmount SUMMIT og i maj 2006 så søsterskibet Fairmount ALPINE, den største og mest kraftfulde slæbebåd der nogensinde er bygget for hollandske interesser. I juli 2006 blev Fairmount GLACIER leveret til Fairmount Marine. Den femte super slæbebåd i serien, Fairmount EXPEDITION, er blevet leveret i maj 2007.

Fairmounts hovedaktiviteter, med sin flåde af fem slæbebåde på 200 tons pullerttræk, er langdistance havbugseringer og bjærgning, transport og tunge løft med delvist-dykkende pramme samt verdensomspændende aktiviteter for Fukada Salvage. Fairmount driver en flåde af ultra stærke langdistance bugserings fartøjer, delvist-dykkende pramme, herunder verdens største enhed den 50.000 dwt GAVEA løfter og multifunktionelle offshore hjælpefartøjer.

## GB

In order to meet the highest quality standards imposed by its world-wide clientel Fairmount Marine ordered no less than five new 205 tons bollard pull long distance towing vessels with anchor handling capacities from the Niigata Shipyard in Japan. Of this series, in May 2005 the 205 tons bollard pull FAIRMOUNT SHERPA was delivered and added to the fleet, in October 2005 sister vessel FAIRMOUNT SUMMIT and in May 2006 sister vessel FAIRMOUNT ALPINE, the largest and most powerful tugs ever built for Dutch interests, followed. In July 2006 FAIRMOUNT GLACIER was delivered to Fairmount Marine. The fifth super tug in the series, FAIRMOUNT EXPEDITION, has been delivered in May 2007.

The Fairmount's main activities are long distance ocean towage and salvage, with its fleet of five tugs of 200 tons bollard pull, the transportation of heavy lifts by semi-submersible barges and the worldwide activities of Fukada Salvage with its modern fleet of offshore support vessels and floating cranes. Fairmount operates a fleet of ultra strong long distance towing vessels, semi-submersible barges including the world's largest unit the 50,000 dwt GAVEA LIFTER and multipurpose offshore support vessels.

## D

Um die höchsten Qualitätsstandards einzuhalten, die ihre Kunden weltweit erwarten, hat Fairmount Marine nicht weniger als fünf neue Schlepper für Langstrecken mit 205 Tonnen Pfahlzug und eigener Ankerausrüstung bei Niigata Shipyard in Japan bestellt. Aus dieser Serie wurde der FAIRMOUNT SHERPA mit 205 t Pfahlzug im Mai 2005 geliefert und in die Flotte übernommen. Im Oktober 2005 folgte das Schwesterschiff FAIRMOUNT SUMMIT und im Mai 2006 folgte das Schwesterschiff FAIRMOUNT ALPINE. Das sind die größten und leistungsfähigsten Schlepper, die jemals für die holländische Interessen gebaut wurden. Im Juli 2006 wurde dann der FAIRMOUNT GLACIER an Fairmount Marine geliefert. Der fünfte Superschlepper dieser Serie, der FAIRMOUNT EXPEDITION, wurde im May 2007 ausgeliefert.

Fairmounts Haupttätigkeitsfeld liegt im Bereich der Hochseeschlepp- und Bergungsschiffe für Fernstrecken, wozu seine Flotte von fünf Schleppern mit einem Pfahlzug von 200 Tonnen gehört, und im Bereich des Transports von Schwerlasten durch Halbtaucher-Bargen. Außerdem ist Fukada Salvage weltweit mit seiner modernen Flotte von Offshore-Unterstützungsschiffen und Schwimmkränen aktiv. Fairmount betreibt eine Flotte von ultrastarken Schleppern für Langstrecken und die Mehrzweck- Offshore- Unterstützungsschiffe, wobei zu den Halbtaucher-Bargen die weltgrößte Barge mit 50.000 dwt, die GAVEA LIFTER, gehört.

## F

Afin de répondre aux normes de qualité les plus strictes telles qu'imposées par sa clientèle mondiale, Fairfount Marine a commandé auprès du chantier naval de Niigata au Japon pas moins de cinq nouveaux bateaux de remorquage bollard pull longue distance avec manœuvre d'ancrage. De cette série a été livré et est entrée dans la flotte en mai 2005 le bollard pull FAIRMOUNT SHERPA de 205 tonnes pour en octobre 2005 être suivi par le navire jumeau FAIRMOUNT SUMMIT et en mai 2006 par FAIRMOUNT ALPINE, les remorqueurs les plus grands et les plus puissants jamais construits pour les intérêts néerlandais. En juillet 2006 a été livré le navire FAIRMOUNT GLACIER à Fairmount Marine. Le cinquième super remorqueur dans la série de FAIRMOUNT EXPEDITION a été fourni en mai 2007.

Les activités principales de Fairmount sont le remorquage et le sauvetage longue distance en haute mer avec sa flotte de cinq remorqueurs bollard pull à 200 tonnes, le transport de charges lourdes par des semi-submersibles et les activités globales de Fukada Salvage, équipé de sa flotte moderne de ravitailleurs au large et grues flottantes. Fairmount gère une flotte de remorqueurs, de semi-submersibles ultra puissants longue distance, parmi ceux-ci la plus grande unité au monde ladite GAVEA LIFTER de 50 000 tpl., et de ravitailleurs en mer polyvalents.

## NL

Om aan de hoge kwaliteitsnormen - opgelegd door haar wereldwijde klantenkring - te voldoen, bestelde Fairmount Marine niet minder dan vijf nieuwe lange afstand slepers bij de Niigata Shipyard in Japan. Van deze serie, werd in mei 2005 de Fairmount Sherpa geleverd en aan de vloot toegevoegd, in oktober 2005 volgde zusterschip Fairmount Summit en in mei 2006 werd zusterschip Fairmount Alpine afgeleverd. In juli 2006 werd de Fairmount GLACIER aan Fairmount Marine geleverd en de vijfde super sleepboot in de serie, Fairmount Expedition, werd in mei 2007 afgeleverd. Deze schepen zijn de grootste en krachtigste sleepboten ooit voor Nederland gebouwd.

De hoofdactiviteiten van Fairmount zijn het lange afstand oceaan-slepen en bergen met haar vloot van vijf sleepboten en het vervoer van zware ladingen door semi-afzinkbare schepen alsmede de wereldwijde activiteiten van Fukada Salvage met haar moderne vloot van offshore support schepen en drijvende kranen. Fairmount exploiteert een vloot van ultra sterke lange-afstand slepers, half-afzinkbare schepen waaronder ‘s werelds grootste eenheid van de 50.000 dwt Gavea LIFTER en multipurpose offshore support schepen.

## I

Per soddisfare i requisiti di massima qualità imposti dalla sua clientela a livello mondiale, Fairmount Marine ha ordinato non meno di 5 rimorchiatori oceanici anchor handling con capacità di tiro pari a 205 tonnellate alla giapponese Niigata Shipyard. Di tale serie, il rimorchiatore oceanico con capacità di 205 tonnellate FAIRMOUNT SHERPA è stato consegnato a maggio 2005 e integrato nella flotta; il FAIRMOUNT SUMMIT, con uguali caratteristiche, nell’ottobre 2005, seguito, nel maggio 2006, dal FAIRMOUNT ALPINE, il più grande e potente mai fabbricato su richiesta olandese. Alla Fairmount Marine è stato consegnato, a luglio 2006, anche il FAIRMOUNT GLACIER. Il quinto super-rimorchiatore della serie, il FAIRMOUNT EXPEDITION, è stato consegnato a maggio 2007.

La Fairmount si occupa principalmente, grazie alla sua flotta di cinque rimorchiatori con capacità di tiro da 200 tonnellate, di traino e salvataggio, del trasporto di carichi pesanti tramite chiatte semisommergibili e, con la sua moderna flotta di navi di supporto e gru galleggianti, delle attività a livello mondiale di Fukada Salvage. Fairmount gestisce una flotta di potenti navi da rimorchio in mare aperto, chiatte semisommergibili, compresa la più grande unità del mondo, la GAVEA LIFTER, con 50.000 tonnellate di portata lorda (DWT), e navi polivalenti da supporto offshore.

## E

Con el fin de cumplir con las normas de calidad más exigentes impuestas por su clientela mundial, Fairmount Marine realizó un pedido de no menos de cinco nuevos buques remolcadores de larga distancia para bolardos de 205 toneladas, con capacidades de manejo de anclaje, al astillero de Niigata, Japón. De esta serie, en mayo de 2005 se entregó el buque remolque de bolardos de 205 toneladas FAIRMOUNT SHERPA, que se agregó a la flota. En octubre de 2005, se entregó su buque gemelo FAIRMOUNT SUMMIT; y en mayo de 2006, les siguió el FAIRMOUNT ALPINE, el remolcador más grande y más potente jamás construido para intereses holandeses. En julio de 2006, Fairmount Marine recibió el FAIRMOUNT GLACIER. El quinto súper remolcador de la serie, el FAIRMOUNT EXPEDITION, se entregó en mayo de 2007.

Las actividades principales de Fairmount son los remolques y los salvamentos oceánicos de larga distancia, gracias a su flota de cinco remolcadores de bolardos de 200 toneladas, el transporte de montacargas pesados mediante las barcazas semisumergibles y las actividades internacionales de Fukada Salvage, con su flota moderna de buques de apoyo en alta mar y grúas flotantes. Fairmount opera una flota de buques de remolcadores de larga distancia ultra resistentes y de barcazas semisumergibles, que incluyen al remolcador más grande del mundo, el GAVEA LIFTER, con una capacidad de 50,000 toneladas de peso muerto o DWT, por sus siglas en inglés, y de buques de apoyo multipropósito para alta mar.

## P

De forma a corresponder aos mais altos padrões de qualidade impostos pela sua clientela à escala mundial, a Fairmount Marine encomendou nada mais nada menos que 5 novos reboques para embarcações de 205 toneladas com capacidade de manuseio de âncoras ao Estaleiro Niigata no Japão. Desta série, em Maio de 2005 o reboque de 205 toneladas FAIRMOUNT SHERPA foi entregue e adicionado à frota, seguindo-se as embarcações análogas FAIRMOUNT SUMMIT em Outubro de 2005 e FAIRMOUNT ALPINE em Maio de 2006, os maiores e mais potentes rebocadores alguma vez construídos para exploração holandesa. Em Julho de 2006 FAIRMOUNT GLACIER foi entregue à Fairmount Marine. O quinto super rebocador da série, FAIRMOUNT EXPEDITION, foi entregue em Maio de 2007.

A principal actividade da Fairmount é o reboque e salvamento no alto mar, com a sua frota de cinco rebocadores de 200 toneladas, o transporte de cargas pesadas em barcaças semi-submersíveis e as actividades mundiais Fukada Salvage com a sua moderna frota de embarcações de apoio offshore e gruas flutuantes. A Fairmount opera uma frota de embarcações de reboque ultra sólidos, barcaças semi-submersíveis incluindo a maior unidade do mundo com 50.000 dwt, o GAVEA LIFTER, e embarcações de apoio offshore para vários fins.

Table contents for “FAIRMOUNT ALPINE” Art. No. 506

| Pcs. | No. | Dimension | Material | DK | GB | D | F |
|---|---|---|---|---|---|---|---|
| 1 | 1 | 5mm | 3246L-3 | Køl | Keel | Kiel | Quille |
| 1 | 2 | 5mm | 3246L-1 | Køl | Keel | Kiel | Quille |
| 1 | 3 | 5mm | 3246L-1 | Køl | Keel | Kiel | Quille |
| 1 | 4 | 5mm | 3246L-2 | Spant | Frame | Spant | Couple |
| 1 | 5 | 5mm | 3246L-2 | Spant | Frame | Spant | Couple |
| 1 | 6 | 5mm | 3246L-2 | Spant | Frame | Spant | Couple |
| 1 | 7 | 5mm | 3246L-2 | Spant | Frame | Spant | Couple |
| 1 | 8 | 5mm | 3246L-2 | Spant | Frame | Spant | Couple |
| 1 | 9 | 5mm | 3246L-1 | Spant | Frame | Spant | Couple |
| 1 | 10 | 5mm | 3246L-1 | Støttespant | Support frame | Hilfspant | Piéce d’appui |
| 1 | 11 | 5mm | 3246L-1 | Spant | Frame | Spant | Couple |
| 2 | 12 | 5mm | 3246L-1 | Støttespant | Support frame | Hilfspant | Piéce d’appui |
| 2 | 13 | 5mm | 3246L-1 + 2 | Spant | Frame | Spant | Couple |
| 1 | 14 | 5mm | 3246L-1 | Spant | Frame | Spant | Couple |
| 1 | 15 | 5mm | 3246L-2 | Spant | Frame | Spant | Couple |
| 1 | 16 | 5mm | 3246L-2 | Spant | Frame | Spant | Couple |
| 1 | 17 | 5mm | 3246L-2 | Spant | Frame | Spant | Couple |
| 2 | 18 | 5mm | 3246L-3 | Støttespant | Support frame | Hilfspant | Piéce d’appui |
| 1 | 19 | 2mm | 3243L-1 | Dæk | Deck | Deck | Pont |
| 2 | 20 | 5mm | 3246L-2 | Hjælpestykker | Auxiliary pieces | Hilfsstücke | Pièce annexes |
| 2 | 21 | 2mm | 3243L-1 + 3 | Dæk | Deck | Deck | Pont |
| 2 | 22 | 5mm | 3246L-3 | Støttespant | Support frame | Hilfspant | Piéce d’appui |
| 1 | 23 | Ø22 x 200mm | Wood | Rundstok | Round stick | Rundstab | Baguette ronde |
| 2 | 24 | 2mm | 3243L-2 | Opbygning/side | Build-up/side | Aufbau/seite | Edification/côté |
| 2 | 25 | 2mm | 3243L-2 | Opbygning/side | Build-up/side | Aufbau/seite | Edification/côté |
| 1 | 26 | 2mm | 3243L-2 | Dæk | Deck | Deck | Pont |
| 2 | 27 | 2mm | 3243L-6 | Opbygning/side | Build-up/side | Aufbau/seite | Edification/côté |
| 2 | 28 | 2mm | 3243L-2 + 6 | Opbygning/side | Build-up/side | Aufbau/seite | Edification/côté |
| 2 | 29 | 2mm | 3243L-2 | Opbygning/side | Build-up/side | Aufbau/seite | Edification/côté |
| 2 | 30 | 2mm | 3243L-1 | Opbygning/side | Build-up/side | Aufbau/seite | Edification/côté |
| 2 | 31 | 2mm | 3243L-3 | Opbygning/side | Build-up/side | Aufbau/seite | Edification/côté |
| 2 | 32 | 2mm | 3243L-3 | Beklædning | Plankingstrips | Beplankung | Baguettes de bordé |
| 2 | 33 | 2mm | 3243L-5 | Beklædning | Plankingstrips | Beplankung | Baguettes de bordé |
| 2 | 34 | 2mm | 3243L-5 | Beklædning | Plankingstrips | Beplankung | Baguettes de bordé |

| | | | | | | | |
|---|---|---|---|---|---|---|---|
| 2 | 35 | 2mm | 3243L-6 | Beklædning | Plankingstrips | Beplankung | Baguettes de bordé |
| 2 | 36 | 2mm | 3243L-3 | Beklædning | Plankingstrips | Beplankung | Baguettes de bordé |
| 2 | 37 | 2mm | 3243L-6 | Beklædning | Plankingstrips | Beplankung | Baguettes de bordé |
| 2 | 38 | 2mm | 3243L-3 | Beklædning | Plankingstrips | Beplankung | Baguettes de bordé |
| 2 | 39 | 2mm | 3243L-6 | Beklædning | Plankingstrips | Beplankung | Baguettes de bordé |
| 1 | 40 | 2mm | 3243L-5 | Faconstykke | Formed piece | Faconbeplankung | Pièce formée |
| 1 | 41 | 5mm | 3246L-1 | Støttespant | Support frame | Hilfspant | Piéce d'appui |
| 1 | 42 | 5mm | 3246L-2 | Støttespant | Support frame | Hilfspant | Piéce d'appui |
| 2 | 43 | 1mm | 3242L | Faconstykke | Formed piece | Faconbeplankung | Pièce formée |
| 4 | 44 | 5mm | 3246L-1 + 3 | Køl | Keel | Kiel | Quille |
| 1 | 45 | Ø35x65mm | Wood | Rundstok | Round stick | Rundstab | Baguette ronde |
| 2 | 46 | 5mm | 3246L-1 | Støttespant | Support frame | Hilfspant | Piéce d'appui |
| 2 | 47 | 5mm | 3246L-1 | Støttespant | Support frame | Hilfspant | Piéce d'appui |
| 2 | 48 | 5mm | 3246L-1 | Støttespant | Support frame | Hilfspant | Piéce d'appui |
| 1 | 49 | 2mm | 3243L-6 | Beklædning | Plankingstrips | Beplankung | Baguettes de bordé |
| 2 | 50 | 5mm | 3246L-2 | Hjælpestykker | Auxiliary pieces | Hilfsstücke | Pièce annexes |
| 2 | 51 | 5mm | 3246L-2 | Ror | Rudder | Ruder | Gouvernail |
| 4 | 52 | 5mm | 3246L-1 | Hjælpestykker | Auxiliary pieces | Hilfsstücke | Pièce annexes |
| 2 | 53 | 5mm | 3246L-3 | Hjælpestykker | Auxiliary pieces | Hilfsstücke | Pièce annexes |
| 14 | 54 | 5mm | 3246L-1 | Hjælpestykker | Auxiliary pieces | Hilfsstücke | Pièce annexes |
| 2 | 55 | 5mm | 3246L-2 | Støttespant | Support frame | Hilfspant | Piéce d'appui |
| 2 | 56 | 33x40x70mm | Balsa | Klods | Block | Klotz | Poulie |
| 2 | 57 | 5mm | 3246L-1 | Hjælpestykker | Auxiliary pieces | Hilfsstücke | Pièce annexes |
| 1 | 58 | 5mm | 3246L-3 | Bjælkebugt | Former | Balkbögen | Traverses |
| 1 | 59 | 2mm | 3243L-1 | Dæk | Deck | Deck | Pont |
| 1 | 60 | 2mm | 3243L-2 | Kahyt-side | Cabin-side | Kajüteseitenteile | Cabine-côte |
| 1 | 61 | 2mm | 3243L-4 | Kahyt-side | Cabin-side | Kajüteseitenteile | Cabine-côte |
| 2 | 62 | 2mm | 3243L-3 | Kahyt-side | Cabin-side | Kajüteseitenteile | Cabine-côte |
| 1 | 63 | 2mm | 3243L-6 | Kahyt-side | Cabin-side | Kajüteseitenteile | Cabine-côte |
| 1 | 64 | 2mm | 3243L-6 | Kahyt-side | Cabin-side | Kajüteseitenteile | Cabine-côte |
| 2 | 65 | 2mm | 3243L-5 | Kahyt-side | Cabin-side | Kajüteseitenteile | Cabine-côte |
| 2 | 66 | 2mm | 3243L-2 | Dæk | Deck | Deck | Pont |
| 8 | 67 | 2mm | 3243L-3 | Kahyt-side | Cabin-side | Kajüteseitenteile | Cabine-côte |
| 2 | 68 | 2mm | 3243L-2 | Kahyt-side | Cabin-side | Kajüteseitenteile | Cabine-côte |
| 2 | 69 | 2mm | 3243L-6 | Kahyt-side | Cabin-side | Kajüteseitenteile | Cabine-côte |
| 2 | 70 | 2mm | 3243L-1 | Kahyt-side | Cabin-side | Kajüteseitenteile | Cabine-côte |

| | | | | | | | |
|---|---|---|---|---|---|---|---|
| 1 | 71 | 2mm | 3243L-3 | Brodæk | Bridgedeck | Brückendeck | Pont |
| 1 | 72 | 2mm | 3243L-6 | Broside | Bridgeside | Brückenseite | Côte de pont |
| 2 | 73 | 2mm | 3243L-6 | Broside | Bridgeside | Brückenseite | Côte de pont |
| 2 | 74 | 2mm | 3243L-3 | Broside | Bridgeside | Brückenseite | Côte de pont |
| 2 | 75 | 2mm | 3243L-2 | Broside | Bridgeside | Brückenseite | Côte de pont |
| 2 | 76 | 2mm | 3243L-3 | Broside | Bridgeside | Brückenseite | Côte de pont |
| 1 | 77 | 2mm | 3243L-2 | Broside | Bridgeside | Brückenseite | Côte de pont |
| 1 | 78 | 2mm | 3243L-6 | Brotag | Bridgeroof | Brückedach | Pont |
| 2 | 79 | 2mm | 3243L-1 | Broside | Bridgeside | Brückenseite | Côte de pont |
| 2 | 80 | 2mm | 3243L-1 | Broside | Bridgeside | Brückenseite | Côte de pont |
| 2 | 81 | 2mm | 3243L-1 | Broside | Bridgeside | Brückenseite | Côte de pont |
| 2 | 82 | 1mm | 3242L | Dør | Door | Türen | Portes |
| 1 | 83 | 2mm | 3243L-1 | Broside | Bridgeside | Brückenseite | Côte de pont |
| 1 | 84 | 2mm | 3243L-1 | Broside | Bridgeside | Brückenseite | Côte de pont |
| 14 | 85 | 2mm | 3243L-5 | Broside | Bridgeside | Brückenseite | Côte de pont |
| 2 | 86 | 2mm | 3243L-3 | Broside | Bridgeside | Brückenseite | Côte de pont |
| 2 | 87 | 1mm | 3242L | Dør | Door | Türen | Portes |
| 2 | 88 | 1mm | 3242L | Dør | Door | Türen | Portes |
| 4 | 89 | 2mm | 3243L-3 | Skorsten | Funnel | Schornstein | Cheminée |
| 4 | 90 | 2mm | 3243L-2 | Skorsten | Funnel | Schornstein | Cheminée |
| 1 | 91 | 2mm | 3243L-2 | Skorsten | Funnel | Schornstein | Cheminée |
| 2 | 92 | 1mm | 3242L | Skorsten | Funnel | Schornstein | Cheminée |
| 2 | 93 | 2mm | 3243L-2 + 6 | Skorsten | Funnel | Schornstein | Cheminée |
| 2 | 94 | 2mm | 3243L-3 | Skorsten | Funnel | Schornstein | Cheminée |
| 1 | 95 | 2mm | | Faconstykke | Formed piece | Faconbeplankung | Pièce formée |
| 2 | 96 | 2mm | 3243L-6 | Beklædning | Planking | Beplankung | Baguette de bord |
| 2 | 97 | 2mm | 3243L-6 | Beklædning | Planking | Beplankung | Baguette de bord |
| 2 | 98 | 2mm | 3243L-5 | Beklædning | Planking | Beplankung | Baguette de bord |
| 2 | 99 | 2mm | 3243L-5 | Beklædning | Planking | Beplankung | Baguette de bord |
| 2 | 100 | 2mm | 3243L-6 | Beklædning | Planking | Beplankung | Baguette de bord |
| 16 | 101 | 4mm | 3245L | Stolpe | Posts | Stütze | Socle |
| 2 | 102 | 2mm | 3243L-2 | Forstærkning | Strenghtening | Verstärkung | Renfort |
| 5 | 103 | Ø5 x 270mm | Wood | Rundstok | Round stick | Rundstab | Baguette ronde |
| 2 | 104 | 4mm | 3245L | Stolpe | Posts | Stütze | Socle |
| 12 | 105 | 4mm | 3245L | Stolpe | Posts | Stütze | Socle |
| 2 | 106 | 2mm | 3243L-1 | Stolpe | Posts | Stütze | Socle |

| | | | | | | | |
|---|---|---|---|---|---|---|---|
| 2 | 107 | 1mm | 3242L | Beklædning | Planking | Beplankung | Baguette de bord |
| 2 | 108 | 4mm | 3245L | Stolpe | Posts | Stütze | Socle |
| 2 | 109 | 5mm | 3246L-2 | Støttespant | Support frame | Hilfspant | Piéce d'appui |
| 2 | 110 | 2mm | 3243L-1 + 2 | Bundplade | Sole-plate | Bodenplatte | Trolé borde des fonds |
| 1 | 111 | 2mm | 3243L-2 | Dæk | Deck | Deck | Pont |
| 1 | 112 | 5mm | 3246L-3 | Støttespant | Support frame | Hilfspant | Piéce d'appui |
| 1 | 113 | 2mm | 3243L-6 | Skot | Bulkhead | Schott | Cloison |
| 24 | 114 | 2mm | 3243L-5 | Stolpe | Posts | Stütze | Socle |
| 1 | 115 | Ø3 X 135mm | Wood | Rundstok | Round stick | Rundstab | Baguette ronde |
| 2 | 116 | 1mm | 3242L | Faconstykke | Formed piece | Faconbeplankung | Pièce formée |
| 2 | 117 | 5mm | 3246L-3 | Støttespant | Support frame | Hilfspant | Piéce d'appui |
| 2 | 118 | 2mm | 3243L-2 | Forstærkning | Strenghtening | Verstärkung | Renfort |
| 4 | 119 | 2mm | 3243L-2 | Forstærkning | Strenghtening | Verstärkung | Renfort |
| 2 | 120 | 2mm | 3243L-2 | Forstærkning | Strenghtening | Verstärkung | Renfort |
| 2 | 121 | 2mm | 3243L-2 | Forstærkning | Strenghtening | Verstärkung | Renfort |
| 2 | 122 | 2mm | 3243L-2 | Forstærkning | Strenghtening | Verstärkung | Renfort |
| 2 | 123 | 2mm | 3243L-2 | Forstærkning | Strenghtening | Verstärkung | Renfort |
| 2 | 124 | 2mm | 3243L-2 | Forstærkning | Strenghtening | Verstärkung | Renfort |
| 2 | 125 | 2mm | 3243L-3 | Forstærkning | Strenghtening | Verstärkung | Renfort |
| 2 | 126 | 2mm | 3243L-2 | Forstærkning | Strenghtening | Verstärkung | Renfort |
| 2 | 127 | 2mm | 3243L-2 | Forstærkning | Strenghtening | Verstärkung | Renfort |
| 2 | 128 | 2mm | 3243L-3 | Hjælpestykker | Auxiliary pieces | Hilfsstücke | Pièce annexes |
| 2 | 129 | 2mm | 3243L-5 | Hjælpestykker | Auxiliary pieces | Hilfsstücke | Pièce annexes |
| 2 | 130 | 2mm | 3243L-5 | Faconstykke | Formed piece | Faconbeplankung | Pièce formée |
| 3 | 131 | 1mm | 3242L | Kabelrulle | Wire drums | Kabeltrommeln | Bobines de câble |
| 2 | 132 | 3mm | 3244L | Kabelrulle | Wire drums | Kabeltrommeln | Bobines de câble |
| 6 | 133 | 1mm | 3242L | Kabelrulle | Wire drums | Kabeltrommeln | Bobines de câble |
| 6 | 134 | 1mm | 3242L | Kabelrulle | Wire drums | Kabeltrommeln | Bobines de câble |
| 3 | 135 | 1mm | 3242L | Kabelrulle | Wire drums | Kabeltrommeln | Bobines de câble |
| 4 | 136 | 4mm | 3245L | Kabelrulle | Wire drums | Kabeltrommeln | Bobines de câble |
| 10 | 137 | 1mm | 3242L | Pullert-fundament | Bollard-Base | Pollertunterlage | Bitte d'arramage |
| 2 | 138 | 1mm | 3242L | Forstærkning | Strenghtening | Verstärkung | Renfort |
| 1 | 139 | Ø16 x 16mm | Wood | Rundstok | Round stick | Rundstab | Baguette ronde |
| 4 | 140 | 3mm | 3244L | Spil | Winch | Winde | Treuil |
| 1 | 141 | 2mm | 3243L-2 | Platform | Platform | Plattform | Plateforme |
| 4 | 142 | 1mm | 3242L | Luge | Hatch | Luken | Ecoutilles |

| | | | | | | | |
|---|---|---|---|---|---|---|---|
| 1 | 143 | 1mm | 3242L | Kran | Crane | Kran | Grue |
| 2 | 144 | 1mm | 3242L | Kran | Crane | Kran | Grue |
| 1 | 145 | 2mm | 3243L-3 | Kran | Crane | Kran | Grue |
| 2 | 146 | 2mm | 3243L-3 | Kran | Crane | Kran | Grue |
| 2 | 147 | 1mm | 3242L | Kran | Crane | Kran | Grue |
| 1 | 148 | 2mm | 3243L-1 | Kran | Crane | Kran | Grue |
| 1 | 149 | 2mm | 3243L-1 | Kran | Crane | Kran | Grue |
| 2 | 150 | 1mm | 3242L | Kran | Crane | Kran | Grue |
| 2 | 151 | 1mm | 3242L | Kran | Crane | Kran | Grue |
| 4 | 152 | 3mm | 3244L | Projektør | Searchlight | Scheinwerfer | Projecteur |
| 2 | 153 | 2mm | 3243L-3 | Kran | Crane | Kran | Grue |
| 2 | 154 | 2mm | 3243L-3 | Kran | Crane | Kran | Grue |
| 4 | 155 | 1mm | 3242L | Kran | Crane | Kran | Grue |
| 1 | 156 | 2mm | 3243L-6 | Kran | Crane | Kran | Grue |
| 2 | 157 | 1mm | 3242L | Lejder | Ladder | Leiter | Echelle |
| 2 | 158 | 1mm | 3242L | Kran | Crane | Kran | Grue |
| 2 | 159 | 1mm | 3242L | Kran | Crane | Kran | Grue |
| 1 | 160 | 2mm | 3243L-3 | Kran | Crane | Kran | Grue |
| 1 | 161 | 2mm | 3243L-1 | Kran | Crane | Kran | Grue |
| 1 | 162 | 2mm | 3243L-1 | Kran | Crane | Kran | Grue |
| 1 | 163 | 1mm | 3242L | Kran | Crane | Kran | Grue |
| 1 | 164 | 1mm | 3242L | Kran | Crane | Kran | Grue |
| 1 | 165 | 2mm | 3243L-3 | Kran | Crane | Kran | Grue |
| 1 | 166 | 2mm | 3243L-3 | Kran | Crane | Kran | Grue |
| 1 | 167 | 2mm | 3243L-3 | Kran | Crane | Kran | Grue |
| 2 | 168 | 1mm | 3242L | Kran | Crane | Kran | Grue |
| 2 | 169 | 5mm | 3246L-3 | Kran | Crane | Kran | Grue |
| 1 | 170 | 1mm | 3242L | Kran | Crane | Kran | Grue |
| 4 | 171 | Ø4 x 270mm | Wood | Rundstok | Round stick | Rundstab | Baguette ronde |
| 2 | 172 | 1mm | 3242L | Lejder | Ladder | Leiter | Echelle |
| 2 | 173 | 1mm | 3242L | Luge | Hatch | Luken | Ecoutilles |
| 1 | 174 | 1mm | 3242L | Dør | Door | Türen | Portes |
| 1 | 175 | 1mm | 3242L | Luge | Hatch | Luken | Ecoutilles |
| 6 | 176 | 1mm | 3242L | Kabelrulle | Wire drums | Kabeltrommeln | Bobines de câble |
| 6 | 177 | 1mm | 3242L | Kabelrulle | Wire drums | Kabeltrommeln | Bobines de câble |
| 2 | 178 | 1mm | 3242L | Kabelrulle | Wire drums | Kabeltrommeln | Bobines de câble |

| | | | | | | | |
|---|---|---|---|---|---|---|---|
| 1 | 179 | 3mm | 3244L | Kabelrulle | Wire drums | Kabeltrommeln | Bobines de câble |
| 2 | 180 | 3mm | 3244L | Kabelrulle | Wire drums | Kabeltrommeln | Bobines de câble |
| 1 | 181 | 2mm | 3243L-2 | Spil-fundament | Winch-base | Spillsockel | Fundement de treuil |
| 4 | 182 | 1mm | 3242L | Spil | Winch | Winde | Treuil |
| 3 | 183 | 1mm | 3242L | Spil | Winch | Winde | Treuil |
| 3 | 184 | 1mm | 3242L | Spil | Winch | Winde | Treuil |
| 2 | 185 | 2mm | 3243L-2 | Spil | Winch | Winde | Treuil |
| 1 | 186 | 3mm | 3244L | Spil | Winch | Winde | Treuil |
| 2 | 187 | 1mm | 3242L | Spil | Winch | Winde | Treuil |
| 1 | 188 | 2mm | 3243L-2 | Spil | Winch | Winde | Treuil |
| 4 | 189 | 2mm | 3243L-1 | Ankerspil | Anchorwindless | Ankerspill | Guindeau |
| 6 | 190 | 5mm | 3246L-2 | Luge | Hatch | Luken | Ecoutilles |
| 6 | 191 | 1mm | 3242L | Luge | Hatch | Luken | Ecoutilles |
| 7 | 192 | 5mm | 3246L-2 | Ventil | Vent | Lüfter | Manche á eau |
| 1 | 193 | 1mm | 3242L | Platform | Platform | Plattform | Plateforme |
| 2 | 194 | 2mm | 3243L-6 | Spil-fundament | Winch-base | Spillsockel | Fundement de treuil |
| 3 | 195 | 2mm | 3243L-3 | Spil | Winch | Winde | Treuil |
| 4 | 196 | 2mm | 3243L-6 | Bedding | Slip | Helling | Cale de construction |
| 2 | 197 | 3mm | 3244L | Radartårn | Radar Tower | Radarturm | Tour de radar |
| 2 | 198 | 3mm | 3244L | Radartårn | Radar Tower | Radarturm | Tour de radar |
| 2 | 199 | 5mm | 3246L-2 | Støttespant | Support frame | Hilfspant | Piéce d'appui |
| 2 | 200 | 5mm | 3246L-2 | Støttespant | Support frame | Hilfspant | Piéce d'appui |
| 3 | 201 | 5mm | 3246L-3 | Projektør | Searchlight | Scheinwerfer | Projecteur |
| 1 | 202 | 1mm | 3242L | Radar | Radar | Radar | Radar |
| 4 | 203 | 1mm | 3242L | Radar | Radar | Radar | Radar |
| 4 | 204 | 5mm | 3246L-2 | Ventil | Vent | Lüfter | Manche á eau |
| 1 | 205 | 1mm | 3242L | Luge | Hatch | Luken | Ecoutilles |
| 1 | 206 | 2mm | 3243L-4 | Broside | Bridgeside | Brückenseite | Côte de pont |
| 1 | 207 | 1mm | 3242L | Luge | Hatch | Luken | Ecoutilles |
| 1 | 208 | 1mm | 3242L | Luge | Hatch | Luken | Ecoutilles |
| 1 | 209 | 1mm | 3242L | Luge | Hatch | Luken | Ecoutilles |
| 2 | 210 | 2mm | 3243L-1 | Ring | Ring | Ring | Anneau |
| 4 | 211 | 5mm | 3246L-2 | Projektør | Searchlight | Scheinwerfer | Projecteur |
| 4 | 212 | 5mm | 3246L-2 | Projektør | Searchlight | Scheinwerfer | Projecteur |
| 4 | 213 | 4mm | 3245L | Vandkanon | Watercannon | Wasserkanone | Canon d'eau |
| 2 | 214 | 4mm | 3245L | Vandkanon | Watercannon | Wasserkanone | Canon d'eau |

| | | | | | | | |
|---|---|---|---|---|---|---|---|
| 2 | 215 | 5mm | 3246L-2 | Ventil | Vent | Lüfter | Manche á eau |
| 1 | 216 | 2mm | 3243L-6 | Radar | Radar | Radar | Radar |
| 1 | 217 | 3mm | 3244L | Radar | Radar | Radar | Radar |
| 1 | 218 | 5mm | 3246L-2 | Radar | Radar | Radar | Radar |
| 1 | 219 | 1mm | 3242L | Radartårn | Radar Tower | Radarturm | Tour de radar |
| 5 | 220 | 1mm | 3242L | Platform, Lanterne | Platform, Light | Plattform, Laterne | Plateforme, Lantene |
| 1 | 221 | Ø12 x 35mm | Wood | Rundstok | Round stick | Rundstab | Baguette ronde |
| 1 | 222 | 4mm | 3245L | Skot | Bulhead | Schott | Cloison |
| 2 | 223 | 5mm | 3246L-1 | Ventil | Vent | Lüfter | Manche á eau |
| 2 | 224 | 5mm | 3246L-1 | Ventil | Vent | Lüfter | Manche á eau |
| 2 | 225 | 1mm | 3242L | Skot | Bulhead | Schott | Cloison |
| 2 | 226 | 1mm | 3242L | Skot | Bulhead | Schott | Cloison |
| 2 | 227 | 1mm | 3242L | Spil | Winch | Winde | Treuil |
| 2 | 228 | 1mm | 3242L | Afskærmning | Shielding | Abschirmung | Blindage |
| 4 | 229 | 2mm | 3243L-2 | Kasse | Box | Kiste | Caisse |
| 4 | 230 | 2mm | 3243L-1 | Kasse | Box | Kiste | Caisse |
| 2 | 231 | 2mm | 3243L-3 | Kasse | Box | Kiste | Caisse |
| 2 | 232 | 4mm | 3245L | Kasse | Box | Kiste | Caisse |
| 2 | 233 | 2mm | 3243L-2 | Forstærkning | Strenghtening | Verstärkung | Renfort |
| 2 | 234 | 1mm | 3242L | Forstærkning | Strenghtening | Verstärkung | Renfort |
| 2 | 235 | 1mm | 3242L | Kran, støtte | Crane, support | Kran, Unterstützung | Appui de grue |
| 1 | 236 | 4mm | 3245L | Dæksel | Covers | Deckel | Couvercles |
| 8 | 237 | 2mm | 3243L-1 | Forstærkning | Strenghtening | Verstärkung | Renfort |
| 5 | 238 | 2mm | 3243L-3 | Brandslangebox | Fire hose | Feuerwehrschlauch | Tuyau d'incendie |
| 1 | 239 | 1mm | 3242L | Radartårn | Radar Tower | Radarturm | Tour de radar |
| 1 | 240 | 1mm | 3242L | Radartårn | Radar Tower | Radarturm | Tour de radar |
| 1 | 241 | 3mm | 3244L | Støttespant | Support frame | Hilfspant | Piéce d'appui |
| 2 | 242 | 1mm | 3242L | Navneskilt | Nameplate | Namensschild | Plaque |
| 2 | 243 | 1mm | 3242L | Lanternekasse | Board for sidelight | Lanternenkästen | Cajas para linternas |
| 2 | 244 | 1mm | 3242L | Lanternekasse | Board for sidelight | Lanternenkästen | Cajas para linternas |
| 2 | 245 | 1mm | 3242L | Lanternekasse | Board for sidelight | Lanternenkästen | Cajas para linternas |
| 2 | 246 | 5mm | 3246L-2 | Klods | Block | Klotz | Poulie |
| 8 | 247 | 1mm | 3242L | Vandkanon | Watercannon | Wasserkanone | Canon d'eau |
| 2 | 248 | 1mm | 3242L | Spil | Winch | Winde | Treuil |
| 1 | 249 | 1mm | 3242L | Spil | Winch | Winde | Treuil |
| 1 | 250 | 3mm | 3244L | Pumpe | Pump | Pumpe | Pompe |

| | | | | | | | |
|---|---|---|---|---|---|---|---|
| 4 | 251 | 2mm | 3243L-2 | Lampe | Lamp | Lampen | Lampe |
| 2 | 252 | 5mm | 3246L-3 | Kasse | Box | Kiste | Caisse |
| 2 | 253 | 1mm | 3242L | Ring | Ring | Ring | Anneau |
| 1 | 254 | 3mm | 3244L | Kedel | Boiler | Kessel | Chaudière |
| 1 | 255 | 1mm | 3242L | Lejder | Ladder | Leiter | Echelle |
| 1 | 256 | 2mm | 3243L-3 | Brodæk | Bridgedeck | Brückendeck | Pont |
| 4 | 257 | 2mm | 3243L-3 | Forstærkning | Strenghtening | Verstärkung | Renfort |
| 2 | 258 | 2mm | 3243L-2 | Forstærkning | Strenghtening | Verstärkung | Renfort |
| 3 | 259 | 1mm | 3242L | Projektør | Searchlight | Scheinwerfer | Projecteur |
| 2 | 260 | 1mm | 3242L | Projektør | Searchlight | Scheinwerfer | Projecteur |
| 2 | 261 | 1mm | 3242L | Kran | Crane | Kran | Grue |
| 1 | 262 | 5mm | 3246L-1 | Hjælpestykker | Auxiliary pieces | Hilfsstücke | Pièce annexes |
| 1 | 263 | 5mm | 3246L-1 | Hjælpestykker | Auxiliary pieces | Hilfsstücke | Pièce annexes |
| 2 | 264 | 2mm | 3243L-2 | Beklædning | Planking | Beplankung | Baguette de bord |
| 2 | 265 | 2mm | 3243L-1 | Bundplade | Sole-plate | Bodenplatte | Trolé borde des fonds |
| 1 | 266 | | | Presenning | Tarpaulin | Presenning | Bâche |
| 4 | 268 | Ø8 x 33mm | Brass | Messingrør | Brass pipes | Messingrohr | Tuyaux en laiton |
| 2 | 269 | Ø5 x 10mm | Brass | Messingrør | Brass pipes | Messingrohr | Tuyaux en laiton |
| 1 | 271 | Ø4 x 110mm | Aluminum | Tråd | Wire | Draht | Fil |
| 1 | 272 | Ø5 x 442mm | Aluminum | Tråd | Wire | Draht | Fil |
| 1 | 273 | Ø20 x 30mm | Plastic | Rør | Pipe | Rohre | Tuyau |
| 1 | 274 | Ø25 x 135mm | Plastic | Rør | Pipe | Rohre | Tuyau |
| 1 | 275 | 2x10x160mm | Basswood | Liste | Strip | Leiste | Baguette |
| 1 | 276 | 1,8x2x360mm | Abachi | Liste | Strip | Leiste | Baguette |
| 12 | 277 | 1,8x6x550mm | Abachi | Liste | Strip | Leiste | Baguette |
| 16 | 278 | 1,8x5x550mm | Abachi | Liste | Strip | Leiste | Baguette |
| 36 | 279 | 0,7x3x550mm | Annegre | Liste | Strip | Leiste | Baguette |
| 4 | F22A | 0,5mm | Copper | Kobbertråd | Copperwire | Kupferdraht | Fil de cuivre |
| 11 | F39 | Ø1mm x 250mm | Brass | Messingtråd | Brasswire | Messingdraht | Fil de laiton |
| 1 | F49 | 12mm | Brass | Sirene | Steam siren | Sirene | Siréne |
| 1 | F52 | Ø9mm | Plastic | Nathus | Binnacle | Kompass | Habitacle |
| 1 | F53 | Ø6mm | Brass | Rulle | Pulley | Rollen | Poulie |
| 17 | F 54 | Ø1,1x8mm | Brass | Lanterne/Pumpe | Lights | Lanternen | Feux de navigation |
| 1 | F71 | 1,5m | | Rigningstråd | Rigging thread | Takelgarn | Fil de greement |
| 1 | F73 | 0,5m | | Rigningstråd | Rigging thread | Takelgarn | Fil de greement |
| 1 | F74 | 1m | | Rigningstråd | Rigging thread | Takelgarn | Fil de greement |

| | | | | | | | |
|---|---|---|---|---|---|---|---|
| 1 | F76 | 250mm | | Ankerkæde | Anchorchain | Ankerkette | Chaine d'Ancre |
| 2 | F100 | Ø4mm | Brass | Lanterne | Light | Laterne | Lanterne |
| 22 | F112 | Ø5x9mm | Brass | Pullert | Bollard | Poller | Bitte d'amarrage |
| 1 | F124 | Ø3 x 110mm | Brass | Messingrør | Brass pipes | Messingrohr | Tuyaux en laiton |
| 2 | F130 | Ø10x8mm | Brass | Wirerulle | Pulley | Wireroller | Poulies |
| 1 | F138 | Ø5x11mm | Brass | Motor | Engine | Motor | Moteur |
| 6 | F136 | 12x12mm | Plastic | Redningsbælte | Lifebelts | Rettungsringe | Bouée |
| 2 | F137 | Ø6x4,8mm | Brass | Spilkop | Warping end | Spillkopf | Tambour |
| 158 | F145 | 14mm | Brass | Gelænderstøtte | Railstanchion | Relingsstützen | Chandeliers |
| 8 | F 181 | 60x3,2mm | Plastic | Lejder | Ladder | Leiter | Echelle |
| 4 | F187 | 20mm | Brass | Røstjern | Chainplates | Rüsteisen | Cadénes |
| 2 | F237R | Ø19mm | Plastic | Propeller | Propeller | Schiffsschraube | Hélice |
| 2 | F237L | Ø19mm | Plastic | Propeller | Propeller | Schiffsschraube | Hélice |
| 5 | F291 | Ø5mm | Brass | Wirerulle | Pulley | Wirerulle | Poulies |
| 4 | F312 | Ø2x12mm | Steel | Træskrue | Screw | Schraube | Cheville |
| 1 | F347 | Ø5mm | Wood | Træperler | Wood pearls | Holzkugeln | Boules |
| 2 | F375 | Ø6x2mm | Brass | Wirerulle | Pulley | Wireroller | Poulies |
| 4 | F380 | ø7x2,2mm | Brass | Koniske skive | Conical Disk | Konische Scheibe | Disque conique |
| 1 | F382 | ø16x3mm | Brass | Wirerulle | Pulley | Wireroller | Poulies |
| 2 | F392 | 22mm | Brass | Skrueaksel | Propeller shaft | Stevenroller | Abre porte |
| 5 | F409 | Ø1,5mm x 250mm | Brass | Messingtråd | Brasswire | Messingdraht | Fil de laiton |
| 3 | F410 | Ø2mm x 250mm | Brass | Messingtråd | Brasswire | Messingdraht | Fil de laiton |
| 4 | F418 | ø10x9mm | Brass | Projektør | Searchlight | Scheinwerfer | Projecteur |
| 4 | F419 | ø10x3mm | Plastic | Projektør | Searchlight | Scheinwerfer | Projecteur |
| 8 | F420 | ø1,5x5mm | Brass | Projektør | Searchlight | Scheinwerfer | Projecteur |
| 2 | F475R | 22x32mm | Plastic | Skrueaksel holder | Prop. Shaft console | Stevenrohr stütze | Chaise arbre d'hélice |
| 2 | F475L | 22x32mm | Plastic | Skrueaksel holder | Prop. Shaft console | Stevenrohr stütze | Chaise arbre d'hélice |
| 2 | F476-1 | 93mm | Brass | Rorstamme | Rudder stock | Ruderstamm | Arbre étambot de |
| 2 | F476-2 | 27mm | Brass | Rorstamme | Rudder stock | Ruderstamm | Arbre étambot de |
| 2 | F477 | 36x85x71mm | Plastic | Dyser | Nozzels | Düsen | Turbine d'hélice |
| 1 | F479R | Ø50mm/M4 | Plastic | Skrue | Propeller | Propeller | Hélice |
| 1 | F479L | Ø50mm/M4 | Plastic | Skrue | Propeller | Propeller | Hélice |
| 2 | F594 | Ø8x6,4mm | Brass | Spilkop | Warping end | Spillkopf | Tambour |
| 2 | F595 | Ø6x4mm | Brass | Rulle | Reel | Rolle | Poulie |
| 1 | F616 | Ø4 x 4mm | Brass | Lanterne | Lights | Lanternen | Feux de navigation |
| 10 | F663 | 0,75mm | Brass | Messingtråd | Brasswire | Messingdraht | Fil de laiton |

| | | | | | | | |
|---|---|---|---|---|---|---|---|
| 2 | F664 | 11mm | Brass | Øjebolt | Eye bolt | Augenbolzen | Pitons |
| 2 | B2-115 | Ø4x5mm | Brass | Rulle | Reel | Rolle | Poulie |
| 6 | F692 | Ø10x21mm | Brass | Redningsflåde | Liferaft | Rettungsfloß | Readeau de sauvetage |
| 4 | F717 | 2,5x22x0,4mm | Brass | Projektør | Searchlight | Scheinwerfer | Projecteur |
| 4 | F893 | Ø4x5,5mm | Brass | Motor | Engine | Motor | Moteur |
| 2 | F933 | Ø13x9mm | Brass | Kapstan | Capstan | Kapstan | Cabestan |
| 2 | F934 | 13,5x30x67mm | Plastic | Gummibåd | Rubber boat | Schlauchboot | Bateau en caoutchouc |
| 2 | F935 | 16x4,5x12,5mm | Plastic | Gummibåd, Motor | Rubber boat, Engine | Schlauchboot, Motor | Bateau en caoutchouc, Moteur |
| 2 | B2-080 | Ø5x4mm | Brass | Vandkanon | Watercannon | Wasserkanone | Canon d'eau |
| 1 | TR 180 | | | Transfer | Transfer | Abziehbilder | Décalsmanies |
| 1 | | | | Byggevejledning | Building instr. | Bauanleitung | Instr. de montage |
| 1 | | 50-50101 | | Tegning | Plans | Zeichnung | Plan |
| 1 | | 150x210mm | | Acetat | Acetate | Azetat | Rhodoid |

Table contents for "FAIRMOUNT ALPINE" Art. No. 506

| Pcs. | No. | Dimension | Material | NL | E | I | P |
|---|---|---|---|---|---|---|---|
| 1 | 1 | 5mm | 3246L-3 | Kiel | Quilla | Chiglia | Quilha |
| 1 | 2 | 5mm | 3246L-1 | Kiel | Quilla | Chiglia | Quilha |
| 1 | 3 | 5mm | 3246L-1 | Kiel | Quilla | Chiglia | Quilha |
| 1 | 4 | 5mm | 3246L-2 | Spant | Cuaderna | Ordinata | Armacao |
| 1 | 5 | 5mm | 3246L-2 | Spant | Cuaderna | Ordinata | Armacao |
| 1 | 6 | 5mm | 3246L-2 | Spant | Cuaderna | Ordinata | Armacao |
| 1 | 7 | 5mm | 3246L-2 | Spant | Cuaderna | Ordinata | Armacao |
| 1 | 8 | 5mm | 3246L-2 | Spant | Cuaderna | Ordinata | Armacao |
| 1 | 9 | 5mm | 3246L-1 | Spant | Cuaderna | Ordinata | Armacao |
| 1 | 10 | 5mm | 3246L-1 | Hulpspanten | Cuaderna de apoyo | Ordinata di suporto | Arracáo de apoio |
| 1 | 11 | 5mm | 3246L-1 | Spant | Cuaderna | Ordinata | Armacao |
| 2 | 12 | 5mm | 3246L-1 | Hulpspanten | Cuaderna de apoyo | Ordinata di suporto | Arracáo de apoio |
| 2 | 13 | 5mm | 3246L-1 + 2 | Spant | Cuaderna | Ordinata | Armacao |
| 1 | 14 | 5mm | 3246L-1 | Spant | Cuaderna | Ordinata | Armacao |
| 1 | 15 | 5mm | 3246L-2 | Spant | Cuaderna | Ordinata | Armacao |
| 1 | 16 | 5mm | 3246L-2 | Spant | Cuaderna | Ordinata | Armacao |
| 1 | 17 | 5mm | 3246L-2 | Spant | Cuaderna | Ordinata | Armacao |
| 2 | 18 | 5mm | 3246L-3 | Hulpspanten | Cuaderna de apoyo | Ordinata di suporto | Arracáo de apoio |
| 1 | 19 | 2mm | 3243L-1 | Dek | Cubierta | Ponte | Convés |
| 2 | 20 | 5mm | 3246L-2 | Vulstukken | Trozo de ayuda | Pezzo ausiliario | Peças auxiliares |

| | | | | | | | |
|---|---|---|---|---|---|---|---|
| 2 | 21 | 2mm | 3243L-1 + 3 | Dek | Cubierta | Ponte | Convés |
| 2 | 22 | 5mm | 3246L-3 | Hulpspanten | Cuaderna de apoyo | Ordinata di suporto | Arracáo de apoio |
| 1 | 23 | Ø22 x 200mm | Wood | Rondhout | Barra reronda | Tondino (listello) | Bastão cilindrico |
| 2 | 24 | 2mm | 3243L-2 | Opbouw/zijde | Estructrura/lado | Struttura/lato | Estrutura/lado |
| 2 | 25 | 2mm | 3243L-2 | Opbouw/zijde | Estructrura/lado | Struttura/lato | Estrutura/lado |
| 1 | 26 | 2mm | 3243L-2 | Dek | Cubierta | Ponte | Convés |
| 2 | 27 | 2mm | 3243L-6 | Opbouw/zijde | Estructrura/lado | Struttura/lato | Estrutura/lado |
| 2 | 28 | 2mm | 3243L-2 + 6 | Opbouw/zijde | Estructrura/lado | Struttura/lato | Estrutura/lado |
| 2 | 29 | 2mm | 3243L-2 | Opbouw/zijde | Estructrura/lado | Struttura/lato | Estrutura/lado |
| 2 | 30 | 2mm | 3243L-1 | Opbouw/zijde | Estructrura/lado | Struttura/lato | Estrutura/lado |
| 2 | 31 | 2mm | 3243L-3 | Opbouw/zijde | Estructrura/lado | Struttura/lato | Estrutura/lado |
| 2 | 32 | 2mm | 3243L-3 | Rompbekleding | Listónes de forro | Listelli fasciame | Tiras |
| 2 | 33 | 2mm | 3243L-5 | Rompbekleding | Listónes de forro | Listelli fasciame | Tiras |
| 2 | 34 | 2mm | 3243L-5 | Rompbekleding | Listónes de forro | Listelli fasciame | Tiras |
| 2 | 35 | 2mm | 3243L-6 | Rompbekleding | Listónes de forro | Listelli fasciame | Tiras |
| 2 | 36 | 2mm | 3243L-3 | Rompbekleding | Listónes de forro | Listelli fasciame | Tiras |
| 2 | 37 | 2mm | 3243L-6 | Rompbekleding | Listónes de forro | Listelli fasciame | Tiras |
| 2 | 38 | 2mm | 3243L-3 | Rompbekleding | Listónes de forro | Listelli fasciame | Tiras |
| 2 | 39 | 2mm | 3243L-6 | Rompbekleding | Listónes de forro | Listelli fasciame | Tiras |
| 1 | 40 | 2mm | 3243L-5 | Gevormd deel | Plantilla | Pezzo prefabbricato | Amurada de pôpa |
| 1 | 41 | 5mm | 3246L-1 | Hulpspanten | Cuaderna de apoyo | Ordinata di suporto | Arracáo de apoio |
| 1 | 42 | 5mm | 3246L-2 | Hulpspanten | Cuaderna de apoyo | Ordinata di suporto | Arracáo de apoio |
| 2 | 43 | 1mm | 3242L | Gevormd deel | Plantilla | Pezzo prefabbricato | Amurada de pôpa |
| 4 | 44 | 5mm | 3246L-1 + 3 | Kiel | Quilla | Chiglia | Quilha |
| 1 | 45 | Ø35x65mm | Wood | Rondhout | Barra reronda | Tondino (listello) | Bastão cilindrico |
| 2 | 46 | 5mm | 3246L-1 | Hulpspanten | Cuaderna de apoyo | Ordinata di suporto | Arracáo de apoio |
| 2 | 47 | 5mm | 3246L-1 | Hulpspanten | Cuaderna de apoyo | Ordinata di suporto | Arracáo de apoio |
| 2 | 48 | 5mm | 3246L-1 | Hulpspanten | Cuaderna de apoyo | Ordinata di suporto | Arracáo de apoio |
| 1 | 49 | 2mm | 3243L-6 | Rompbekleding | Listónes de forro | Listelli fasciame | Tiras |
| 2 | 50 | 5mm | 3246L-2 | Vulstukken | Trozo de ayuda | Pezzo ausiliario | Peças auxiliares |
| 2 | 51 | 5mm | 3246L-2 | Roer | Timón | Timone | Leme |
| 4 | 52 | 5mm | 3246L-1 | Vulstukken | Trozo de ayuda | Pezzo ausiliario | Peças auxiliares |
| 2 | 53 | 5mm | 3246L-3 | Vulstukken | Trozo de ayuda | Pezzo ausiliario | Peças auxiliares |
| 14 | 54 | 5mm | 3246L-1 | Vulstukken | Trozo de ayuda | Pezzo ausiliario | Peças auxiliares |
| 2 | 55 | 5mm | 3246L-2 | Hulpspanten | Cuaderna de apoyo | Ordinata di suporto | Arracáo de apoio |
| 2 | 56 | 33x40x70mm | Balsa | Blok | Polea | Blocco | Bloco |

| | | | | | | | |
|---|---|---|---|---|---|---|---|
| 2 | 57 | 5mm | 3246L-1 | Vulstukken | Trozo de ayuda | Pezzo ausiliario | Peças auxiliares |
| 1 | 58 | 5mm | 3246L-3 | Spantdelen | Curvatón | Trave superiore | Fôrma |
| 1 | 59 | 2mm | 3243L-1 | Dek | Cubierta | Ponte | Convés |
| 1 | 60 | 2mm | 3243L-2 | Kajuit-kant | Camarote-Lado | Pezzi laterali della cabina | Cabine/lateral |
| 1 | 61 | 2mm | 3243L-4 | Kajuit-kant | Camarote-Lado | Pezzi laterali della cabina | Cabine/lateral |
| 2 | 62 | 2mm | 3243L-3 | Kajuit-kant | Camarote-Lado | Pezzi laterali della cabina | Cabine/lateral |
| 1 | 63 | 2mm | 3243L-6 | Kajuit-kant | Camarote-Lado | Pezzi laterali della cabina | Cabine/lateral |
| 1 | 64 | 2mm | 3243L-6 | Kajuit-kant | Camarote-Lado | Pezzi laterali della cabina | Cabine/lateral |
| 2 | 65 | 2mm | 3243L-5 | Kajuit-kant | Camarote-Lado | Pezzi laterali della cabina | Cabine/lateral |
| 2 | 66 | 2mm | 3243L-2 | Dek | Cubierta | Ponte | Convés |
| 8 | 67 | 2mm | 3243L-3 | Kajuit-kant | Camarote-Lado | Pezzi laterali della cabina | Cabine/lateral |
| 2 | 68 | 2mm | 3243L-2 | Kajuit-kant | Camarote-Lado | Pezzi laterali della cabina | Cabine/lateral |
| 2 | 69 | 2mm | 3243L-6 | Kajuit-kant | Camarote-Lado | Pezzi laterali della cabina | Cabine/lateral |
| 2 | 70 | 2mm | 3243L-1 | Kajuit-kant | Camarote-Lado | Pezzi laterali della cabina | Cabine/lateral |
| 1 | 71 | 2mm | 3243L-3 | Bridge-kant | Puente-Lado | Ponte coperta | Deck da ponte |
| 1 | 72 | 2mm | 3243L-6 | Bridge-kant | Puente-Lado | Pezzo laterale ponte | Lateral da ponte |
| 2 | 73 | 2mm | 3243L-6 | Bridge-kant | Puente-Lado | Pezzo laterale ponte | Lateral da ponte |
| 2 | 74 | 2mm | 3243L-3 | Bridge-kant | Puente-Lado | Pezzo laterale ponte | Lateral da ponte |
| 2 | 75 | 2mm | 3243L-2 | Bridge-kant | Puente-Lado | Pezzo laterale ponte | Lateral da ponte |
| 2 | 76 | 2mm | 3243L-3 | Bridge-kant | Puente-Lado | Pezzo laterale ponte | Lateral da ponte |
| 1 | 77 | 2mm | 3243L-2 | Bridge-kant | Puente-Lado | Pezzo laterale ponte | Lateral da ponte |
| 1 | 78 | 2mm | 3243L-6 | Bridge | Puente | Tetto del ponte | Teto da ponte |
| 2 | 79 | 2mm | 3243L-1 | Bridge-kant | Puente-Lado | Pezzo laterale ponte | Lateral da ponte |
| 2 | 80 | 2mm | 3243L-1 | Bridge-kant | Puente-Lado | Pezzo laterale ponte | Lateral da ponte |
| 2 | 81 | 2mm | 3243L-1 | Bridge-kant | Puente-Lado | Pezzo laterale ponte | Lateral da ponte |
| 2 | 82 | 1mm | 3242L | Deur | Puerta | Portelle | Porta |
| 1 | 83 | 2mm | 3243L-1 | Bridge-kant | Puente-Lado | Pezzo laterale ponte | Lateral da ponte |
| 1 | 84 | 2mm | 3243L-1 | Bridge-kant | Puente-Lado | Pezzo laterale ponte | Lateral da ponte |
| 14 | 85 | 2mm | 3243L-5 | Bridge-kant | Puente-Lado | Pezzo laterale ponte | Lateral da ponte |
| 2 | 86 | 2mm | 3243L-3 | Bridge-kant | Puente-Lado | Pezzo laterale ponte | Lateral da ponte |
| 2 | 87 | 1mm | 3242L | Deur | Puerta | Portelle | Porta |
| 2 | 88 | 1mm | 3242L | Deur | Puerta | Portelle | Porta |
| 4 | 89 | 2mm | 3243L-3 | Schoorsteen | Chimenea | Camino | Chaminé |
| 4 | 90 | 2mm | 3243L-2 | Schoorsteen | Chimenea | Camino | Chaminé |
| 1 | 91 | 2mm | 3243L-2 | Schoorsteen | Chimenea | Camino | Chaminé |
| 2 | 92 | 1mm | 3242L | Schoorsteen | Chimenea | Camino | Chaminé |

| | | | | | | | |
|---|---|---|---|---|---|---|---|
| 2 | 93 | 2mm | 3243L-2 + 6 | Schoorsteen | Chimenea | Camino | Chaminé |
| 2 | 94 | 2mm | 3243L-3 | Schoorsteen | Chimenea | Camino | Chaminé |
| 1 | 95 | 2mm | | Gevormd deel | Plantilla | Pezzo prefabbricato | Amurada de pôpa |
| 2 | 96 | 2mm | 3243L-6 | Bekledning | Forro | Listelli fasciame | Tiras para amurada leteral intermediária |
| 2 | 97 | 2mm | 3243L-6 | Bekledning | Forro | Listelli fasciame | Tiras para amurada leteral intermediária |
| 2 | 98 | 2mm | 3243L-5 | Bekledning | Forro | Listelli fasciame | Tiras para amurada leteral intermediária |
| 2 | 99 | 2mm | 3243L-5 | Bekledning | Forro | Listelli fasciame | Tiras para amurada leteral intermediária |
| 2 | 100 | 2mm | 3243L-6 | Bekledning | Forro | Listelli fasciame | Tiras para amurada leteral intermediária |
| 16 | 101 | 4mm | 3245L | Paal | Poste | Supporto | Poste |
| 2 | 102 | 2mm | 3243L-2 | Versterkenen | Refuerzo | Rinforzo | Reforço |
| 5 | 103 | Ø5 x 270mm | Wood | Rondhout | Barra reronda | Tondino (listello) | Bastão cilindrico |
| 2 | 104 | 4mm | 3245L | Paal | Poste | Supporto | Poste |
| 12 | 105 | 4mm | 3245L | Paal | Poste | Supporto | Poste |
| 2 | 106 | 2mm | 3243L-1 | Paal | Poste | Supporto | Poste |
| 2 | 107 | 1mm | 3242L | Bekledning | Forro | Listelli fasciame | Tiras para amurada leteral intermediária |
| 2 | 108 | 4mm | 3245L | Paal | Poste | Supporto | Poste |
| 2 | 109 | 5mm | 3246L-2 | Hulpspanten | Cuaderna de apoyo | Ordinata di suporto | Arracáo de apoio |
| 2 | 110 | 2mm | 3243L-1 + 2 | Boden-plaat | Placa de fondo | Base per bitta | Caixa da bateria |
| 1 | 111 | 2mm | 3243L-2 | Dek | Cubierta | Ponte | Convés |
| 1 | 112 | 5mm | 3246L-3 | Hulpspanten | Cuaderna de apoyo | Ordinata di suporto | Arracáo de apoio |
| 1 | 113 | 2mm | 3243L-6 | Schot | Manpara | Paratia | Paredes divisórias |
| 24 | 114 | 2mm | 3243L-5 | Paal | Poste | Supporto | Poste |
| 1 | 115 | Ø3 X 135mm | Wood | Rondhout | Barra reronda | Tondino (listello) | Bastão cilindrico |
| 2 | 116 | 1mm | 3242L | Gevormd deel | Plantilla | Pezzo prefabbricato | Amurada de pôpa |
| 2 | 117 | 5mm | 3246L-3 | Hulpspanten | Cuaderna de apoyo | Ordinata di suporto | Arracáo de apoio |
| 2 | 118 | 2mm | 3243L-2 | Versterkenen | Refuerzo | Rinforzo | Reforço |
| 4 | 119 | 2mm | 3243L-2 | Versterkenen | Refuerzo | Rinforzo | Reforço |
| 2 | 120 | 2mm | 3243L-2 | Versterkenen | Refuerzo | Rinforzo | Reforço |
| 2 | 121 | 2mm | 3243L-2 | Versterkenen | Refuerzo | Rinforzo | Reforço |
| 2 | 122 | 2mm | 3243L-2 | Versterkenen | Refuerzo | Rinforzo | Reforço |
| 2 | 123 | 2mm | 3243L-2 | Versterkenen | Refuerzo | Rinforzo | Reforço |
| 2 | 124 | 2mm | 3243L-2 | Versterkenen | Refuerzo | Rinforzo | Reforço |
| 2 | 125 | 2mm | 3243L-3 | Versterkenen | Refuerzo | Rinforzo | Reforço |
| 2 | 126 | 2mm | 3243L-2 | Versterkenen | Refuerzo | Rinforzo | Reforço |
| 2 | 127 | 2mm | 3243L-2 | Versterkenen | Refuerzo | Rinforzo | Reforço |
| 2 | 128 | 2mm | 3243L-3 | Vulstukken | Trozo de ayuda | Pezzo ausiliario | Peças auxiliares |

| | | | | | | | |
|---|---|---|---|---|---|---|---|
| 2 | 129 | 2mm | 3243L-5 | Vulstukken | Trozo de ayuda | Pezzo ausiliario | Peças auxiliares |
| 2 | 130 | 2mm | 3243L-5 | Gevormd deel | Plantilla | Pezzo prefabbricato | Amurada de pôpa |
| 3 | 131 | 1mm | 3242L | Kabelhaspels | Carretes de cable | Bobine di cavo | bobinas de cabo |
| 2 | 132 | 3mm | 3244L | Kabelhaspels | Carretes de cable | Bobine di cavo | bobinas de cabo |
| 6 | 133 | 1mm | 3242L | Kabelhaspels | Carretes de cable | Bobine di cavo | bobinas de cabo |
| 6 | 134 | 1mm | 3242L | Kabelhaspels | Carretes de cable | Bobine di cavo | bobinas de cabo |
| 3 | 135 | 1mm | 3242L | Kabelhaspels | Carretes de cable | Bobine di cavo | bobinas de cabo |
| 4 | 136 | 4mm | 3245L | Kabelhaspels | Carretes de cable | Bobine di cavo | bobinas de cabo |
| 10 | 137 | 1mm | 3242L | Bolder-fundament | Bitones | Base del bitta | Poste de amarração/base |
| 2 | 138 | 1mm | 3242L | Versterkenen | Refuerzo | Rinforzo | Reforço |
| 1 | 139 | Ø16 x 16mm | Wood | Rondhout | Barra reronda | Tondino (listello) | Bastão cilindrico |
| 4 | 140 | 3mm | 3244L | Winch | Chigre | Argano | Guincho |
| 1 | 141 | 2mm | 3243L-2 | Platform | Plataforma | Piattaforma | Plataforma |
| 4 | 142 | 1mm | 3242L | Luiken | Escoutilla | Boccaporto | Escotilha |
| 1 | 143 | 1mm | 3242L | Kraan | Grúa | Gru | Guindaste |
| 2 | 144 | 1mm | 3242L | Kraan | Grúa | Gru | Guindaste |
| 1 | 145 | 2mm | 3243L-3 | Kraan | Grúa | Gru | Guindaste |
| 2 | 146 | 2mm | 3243L-3 | Kraan | Grúa | Gru | Guindaste |
| 2 | 147 | 1mm | 3242L | Kraan | Grúa | Gru | Guindaste |
| 1 | 148 | 2mm | 3243L-1 | Kraan | Grúa | Gru | Guindaste |
| 1 | 149 | 2mm | 3243L-1 | Kraan | Grúa | Gru | Guindaste |
| 2 | 150 | 1mm | 3242L | Kraan | Grúa | Gru | Guindaste |
| 2 | 151 | 1mm | 3242L | Kraan | Grúa | Gru | Guindaste |
| 4 | 152 | 3mm | 3244L | Schijnwerper | Foco | Proiettore | Holofote |
| 2 | 153 | 2mm | 3243L-3 | Kraan | Grúa | Gru | Guindaste |
| 2 | 154 | 2mm | 3243L-3 | Kraan | Grúa | Gru | Guindaste |
| 4 | 155 | 1mm | 3242L | Kraan | Grúa | Gru | Guindaste |
| 1 | 156 | 2mm | 3243L-6 | Kraan | Grúa | Gru | Guindaste |
| 2 | 157 | 1mm | 3242L | Ladder | Escala | Scaletta | Escada |
| 2 | 158 | 1mm | 3242L | Kraan | Grúa | Gru | Guindaste |
| 2 | 159 | 1mm | 3242L | Kraan | Grúa | Gru | Guindaste |
| 1 | 160 | 2mm | 3243L-3 | Kraan | Grúa | Gru | Guindaste |
| 1 | 161 | 2mm | 3243L-1 | Kraan | Grúa | Gru | Guindaste |
| 1 | 162 | 2mm | 3243L-1 | Kraan | Grúa | Gru | Guindaste |
| 1 | 163 | 1mm | 3242L | Kraan | Grúa | Gru | Guindaste |
| 1 | 164 | 1mm | 3242L | Kraan | Grúa | Gru | Guindaste |

| | | | | | | | |
|---|---|---|---|---|---|---|---|
| 1 | 165 | 2mm | 3243L-3 | Kraan | Grúa | Gru | Guindaste |
| 1 | 166 | 2mm | 3243L-3 | Kraan | Grúa | Gru | Guindaste |
| 1 | 167 | 2mm | 3243L-3 | Kraan | Grúa | Gru | Guindaste |
| 2 | 168 | 1mm | 3242L | Kraan | Grúa | Gru | Guindaste |
| 2 | 169 | 5mm | 3246L-3 | Kraan | Grúa | Gru | Guindaste |
| 1 | 170 | 1mm | 3242L | Kraan | Grúa | Gru | Guindaste |
| 4 | 171 | Ø4 x 270mm | Wood | Rondhout | Barra reronda | Tondino (listello) | Bastão cilindrico |
| 2 | 172 | 1mm | 3242L | Ladder | Escala | Scaletta | Escada |
| 2 | 173 | 1mm | 3242L | Luiken | Escoutilla | Boccaporto | Escotilha |
| 1 | 174 | 1mm | 3242L | Deur | Puerta | Portelle | Porta |
| 1 | 175 | 1mm | 3242L | Luiken | Escoutilla | Boccaporto | Escotilha |
| 6 | 176 | 1mm | 3242L | Kabelhaspels | Carretes de cable | Bobine di cavo | bobinas de cabo |
| 6 | 177 | 1mm | 3242L | Kabelhaspels | Carretes de cable | Bobine di cavo | bobinas de cabo |
| 2 | 178 | 1mm | 3242L | Kabelhaspels | Carretes de cable | Bobine di cavo | bobinas de cabo |
| 1 | 179 | 3mm | 3244L | Kabelhaspels | Carretes de cable | Bobine di cavo | bobinas de cabo |
| 2 | 180 | 3mm | 3244L | Kabelhaspels | Carretes de cable | Bobine di cavo | bobinas de cabo |
| 1 | 181 | 2mm | 3243L-2 | Winch-fundament | Chigre de soporto | Base del verricello | Guincho/base |
| 4 | 182 | 1mm | 3242L | Winch | Chigre | Argano | Guincho |
| 3 | 183 | 1mm | 3242L | Winch | Chigre | Argano | Guincho |
| 3 | 184 | 1mm | 3242L | Winch | Chigre | Argano | Guincho |
| 2 | 185 | 2mm | 3243L-2 | Winch | Chigre | Argano | Guincho |
| 1 | 186 | 3mm | 3244L | Winch | Chigre | Argano | Guincho |
| 2 | 187 | 1mm | 3242L | Winch | Chigre | Argano | Guincho |
| 1 | 188 | 2mm | 3243L-2 | Winch | Chigre | Argano | Guincho |
| 4 | 189 | 2mm | 3243L-1 | Ankerwinch | Chigre de ancla | Argano dell'ancora | guincho da âncora |
| 6 | 190 | 5mm | 3246L-2 | Luiken | Escoutilla | Boccaporto | Escotilha |
| 6 | 191 | 1mm | 3242L | Luiken | Escoutilla | Boccaporto | Escotilha |
| 7 | 192 | 5mm | 3246L-2 | Luchtkoker | Vávula | Ventola | Respiradouro |
| 1 | 193 | 1mm | 3242L | Platform | Plataforma | Piattaforma | Plataforma |
| 2 | 194 | 2mm | 3243L-6 | Winch-fundament | Chigre de soporto | Base del verricello | Guincho/base |
| 3 | 195 | 2mm | 3243L-3 | Winch | Chigre | Argano | Guincho |
| 4 | 196 | 2mm | 3243L-6 | Standaard | Grada | Supporto | Pé do Suporte de Casco |
| 2 | 197 | 3mm | 3244L | Radartoren | Radar de la Torre | Radar torre | Torre de radar |
| 2 | 198 | 3mm | 3244L | Radartoren | Radar de la Torre | Radar torre | Torre de radar |
| 2 | 199 | 5mm | 3246L-2 | Hulpspanten | Cuaderna de apoyo | Ordinata di suporto | Arracáo de apoio |
| 2 | 200 | 5mm | 3246L-2 | Hulpspanten | Cuaderna de apoyo | Ordinata di suporto | Arracáo de apoio |

| | | | | | | | |
|---|---|---|---|---|---|---|---|
| 3 | 201 | 5mm | 3246L-3 | Schijnwerper | Foco | Proiettore | Holofote |
| 1 | 202 | 1mm | 3242L | Radar | Radar | Radar | Radar |
| 4 | 203 | 1mm | 3242L | Radar | Radar | Radar | Radar |
| 4 | 204 | 5mm | 3246L-2 | Luchtkoker | Vávula | Ventola | Respiradouro |
| 1 | 205 | 1mm | 3242L | Luiken | Escoutilla | Boccaporto | Escotilha |
| 1 | 206 | 2mm | 3243L-4 | Bridge-kant | Puente-Lado | Pezzo laterale ponte | Lateral da ponte |
| 1 | 207 | 1mm | 3242L | Luiken | Escoutilla | Boccaporto | Escotilha |
| 1 | 208 | 1mm | 3242L | Luiken | Escoutilla | Boccaporto | Escotilha |
| 1 | 209 | 1mm | 3242L | Luiken | Escoutilla | Boccaporto | Escotilha |
| 2 | 210 | 2mm | 3243L-1 | Ring | Aro | Anello | Anel |
| 4 | 211 | 5mm | 3246L-2 | Schijnwerper | Foco | Proiettore | Holofote |
| 4 | 212 | 5mm | 3246L-2 | Schijnwerper | Foco | Proiettore | Holofote |
| 4 | 213 | 4mm | 3245L | Waterkanon | Cañones de agua | Cannone acquatico | Canhão de água |
| 2 | 214 | 4mm | 3245L | Waterkanon | Cañones de agua | Cannone acquatico | Canhão de água |
| 2 | 215 | 5mm | 3246L-2 | Luchtkoker | Vávula | Ventola | Respiradouro |
| 1 | 216 | 2mm | 3243L-6 | Radar | Radar | Radar | Radar |
| 1 | 217 | 3mm | 3244L | Radar | Radar | Radar | Radar |
| 1 | 218 | 5mm | 3246L-2 | Radar | Radar | Radar | Radar |
| 1 | 219 | 1mm | 3242L | Radartoren | Radar de la Torre | Radar torre | Torre de radar |
| 5 | 220 | 1mm | 3242L | Platform, Boordlichten | Plataforma, Linterna | Piattaforma, Lanterna di bordo | Plataforma, Luzes |
| 1 | 221 | Ø12 x 35mm | Wood | Rondhout | Barra reronda | Tondino (listello) | Bastão cilindrico |
| 1 | 222 | 4mm | 3245L | Schot | Manparo | Paratia | Parede |
| 2 | 223 | 5mm | 3246L-1 | Luchtkoker | Vávula | Ventola | Respiradouro |
| 2 | 224 | 5mm | 3246L-1 | Luchtkoker | Vávula | Ventola | Respiradouro |
| 2 | 225 | 1mm | 3242L | Schot | Manparo | Paratia | Parede |
| 2 | 226 | 1mm | 3242L | Schot | Manparo | Paratia | Parede |
| 2 | 227 | 1mm | 3242L | Winch | Chigre | Argano | Guincho |
| 2 | 228 | 1mm | 3242L | Afscherming | Blindaje | Schermatura | Blindagem |
| 4 | 229 | 2mm | 3243L-2 | Kist | Caja | Cassa | Baú |
| 4 | 230 | 2mm | 3243L-1 | Kist | Caja | Cassa | Baú |
| 2 | 231 | 2mm | 3243L-3 | Kist | Caja | Cassa | Baú |
| 2 | 232 | 4mm | 3245L | Kist | Caja | Cassa | Baú |
| 2 | 233 | 2mm | 3243L-2 | Versterkenen | Refuerzo | Rinforzo | Reforço |
| 2 | 234 | 1mm | 3242L | Versterkenen | Refuerzo | Rinforzo | Reforço |
| 2 | 235 | 1mm | 3242L | Kraan te ondersteunen | Apoyo de la grúa | Gru di supporto | Apoio guindaste |
| 1 | 236 | 4mm | 3245L | Deksels | Tapa | Coperchio | Coberturas |

| | | | | | | | |
|---|---|---|---|---|---|---|---|
| 8 | 237 | 2mm | 3243L-1 | Versterkenen | Refuerzo | Rinforzo | Reforço |
| 5 | 238 | 2mm | 3243L-3 | Brandslang | Manguera de fuego | Manichetta antincendio | Mangueira de incêndio |
| 1 | 239 | 1mm | 3242L | Radartoren | Radar de la Torre | Radar torre | Torre de radar |
| 1 | 240 | 1mm | 3242L | Radartoren | Radar de la Torre | Radar torre | Torre de radar |
| 1 | 241 | 3mm | 3244L | Hulpspanten | Cuaderna de apoyo | Ordinata di suporto | Arracáo de apoio |
| 2 | 242 | 1mm | 3242L | Naambord | Placa del fabricante | Targhetta | Placa de identificação |
| 2 | 243 | 1mm | 3242L | Lichtbakken | Caja para linterna | Cassa lanterna | Suporte da luz lateral |
| 2 | 244 | 1mm | 3242L | Lichtbakken | Caja para linterna | Cassa lanterna | Suporte da luz lateral |
| 2 | 245 | 1mm | 3242L | Lichtbakken | Caja para linterna | Cassa lanterna | Suporte da luz lateral |
| 2 | 246 | 5mm | 3246L-2 | Blok | Poela | Blocco | Bloco |
| 8 | 247 | 1mm | 3242L | Waterkanon | Cañones de agua | Cannone acquatico | Canhão de água |
| 2 | 248 | 1mm | 3242L | Winch | Chigre | Argano | Guincho |
| 1 | 249 | 1mm | 3242L | Winch | Chigre | Argano | Guincho |
| 1 | 250 | 3mm | 3244L | Pomp | Bomba | Pompa | Bomba |
| 4 | 251 | 2mm | 3243L-2 | Lamp | Lámpara | Lampade | Lâmpada |
| 2 | 252 | 5mm | 3246L-3 | Kist | Caja | Cassa | Baú |
| 2 | 253 | 1mm | 3242L | Ring | Aro | Anello | Anel |
| 1 | 254 | 3mm | 3244L | Ketel | Caldera | Caldaia | Caldeira |
| 1 | 255 | 1mm | 3242L | Ladder | Escala | Scaletta | Escada |
| 1 | 256 | 2mm | 3243L-3 | Brugdek | Puente | Ponte coperta | Deck da ponte |
| 4 | 257 | 2mm | 3243L-3 | Versterkenen | Refuerzo | Rinforzo | Reforço |
| 2 | 258 | 2mm | 3243L-2 | Versterkenen | Refuerzo | Rinforzo | Reforço |
| 3 | 259 | 1mm | 3242L | Schijnwerper | Foco | Proiettore | Holofote |
| 2 | 260 | 1mm | 3242L | Schijnwerper | Foco | Proiettore | Holofote |
| 2 | 261 | 1mm | 3242L | Kraan | Grúa | Gru | Guindaste |
| 1 | 262 | 5mm | 3246L-1 | Vulstukken | Trozo de ayuda | Pezzo ausiliario | Peças auxiliares |
| 1 | 263 | 5mm | 3246L-1 | Vulstukken | Trozo de ayuda | Pezzo ausiliario | Peças auxiliares |
| 2 | 264 | 2mm | 3243L-2 | Bekledning | Forro | Listelli fasciame | Tiras para amurada leteral intermediária |
| 2 | 265 | 2mm | 3243L-1 | Boden-plaat | Placa de fondo | Base per bitta | Caixa da bateria |
| 1 | 266 | | | Dekzeil | Tela impermeable | Tela olona | Lona do bote |
| 4 | 268 | Ø8 x 33mm | Brass | Messingbeslag | Tubo de latón | Tubo di ottone | Tubo de latão |
| 2 | 269 | Ø5 x 10mm | Brass | Messingbeslag | Tubo de latón | Tubo di ottone | Tubo de latão |
| 1 | 271 | Ø4 x 110mm | Aluminum | Draad | Hilo | Filo | Fio |
| 1 | 272 | Ø5 x 442mm | Aluminum | Draad | Hilo | Filo | Fio |
| 1 | 273 | Ø20 x 30mm | Plastic | Pipj | Tubo | Tubo | Tubo |
| 1 | 274 | Ø25 x 135mm | Plastic | Pipj | Tubo | Tubo | Tubo |

| | | | | | | | |
|---|---|---|---|---|---|---|---|
| 1 | 275 | 2x10x160mm | Basswood | Strip | Liston | Listello | Tira |
| 1 | 276 | 1,8x2x360mm | Abachi | Strip | Liston | Listello | Tira |
| 12 | 277 | 1,8x6x550mm | Abachi | Strip | Liston | Listello | Tira |
| 16 | 278 | 1,8x5x550mm | Abachi | Strip | Liston | Listello | Tira |
| 36 | 279 | 0,7x3x550mm | Annegre | Strip | Liston | Listello | Tira |
| 4 | F22A | 0,5mm | Copper | Koperdraad | Alambre de cobre | Filo di rame | Fio de cobre |
| 11 | F39 | Ø1mm x 250mm | Brass | Messingdraad | Hilo de latón | Filo in ottone | Fio de latão |
| 1 | F49 | 12mm | Brass | Sirene | Sirena | Sirena | Sirene |
| 1 | F52 | Ø9mm | Plastic | Kompass | Brújula | Bussola | Bússola |
| 1 | F53 | Ø6mm | Brass | Rollen | Rodillos | Pulegge | Polia |
| 17 | F 54 | Ø1,1x8mm | Brass | Boordlichten | Linternas | Lanterna di bordo | Luzes |
| 1 | F71 | 1,5m | | Takelgaren | Hilo de oparejo | Filo per manovre | Linha de cordame |
| 1 | F73 | 0,5m | | Takelgaren | Hilo de oparejo | Filo per manovre | Linha de cordame |
| 1 | F74 | 1m | | Takelgaren | Hilo de oparejo | Filo per manovre | Linha de cordame |
| 1 | F76 | 250mm | | Ankerketting | Cadena de ancla | Catena delle ancore | Corrente da âncora |
| 2 | F100 | Ø4mm | Brass | Boordlichten | Linterna | Lanterna di bordo | Luzes |
| 22 | F112 | Ø5x9mm | Brass | Bolder | Bitón | Bitta | Abita |
| 1 | F124 | Ø3 x 110mm | Brass | Messingbeslag | Tubo de latón | Tubo di ottone | Tubo de latão |
| 2 | F130 | Ø10x8mm | Brass | Katrollen | Rodillos para alambre | Argano a fune | Polia |
| 1 | F138 | Ø5x11mm | Brass | Motor | Motor | Motore | Motor |
| 6 | F136 | 12x12mm | Plastic | Reddingsboei | Cinturones salvavidas | Cintura di salvataggio | Bóia salva-vidas |
| 2 | F137 | Ø6x4,8mm | Brass | Spilkop | Tambor de cabrestante | Testa argano | Terminal |
| 158 | F145 | 14mm | Brass | Railingspalen | Soporte de pasamanos | Supporti per corrimano | Pontalete da amurada |
| 8 | F 181 | 60x3,2mm | Plastic | Ladder | Escala | Scaletta | Escada |
| 4 | F187 | 20mm | Brass | Puttings | Cadenote | Landra | Fixador do ovém |
| 2 | F237R | Ø19mm | Plastic | Schroet | Hélice | Elica | Hélice |
| 2 | F237L | Ø19mm | Plastic | Schroet | Hélice | Elica | Hélice |
| 5 | F291 | Ø5mm | Brass | Katrollen | Rodillos para alambre | Argano a fune | Polia |
| 4 | F312 | Ø2x12mm | Steel | Schroef | Tornillos para madera | Vite | Parafuso |
| 1 | F347 | Ø5mm | Wood | Bal | Balas | Sfere | Esferas |
| 2 | F375 | Ø6x2mm | Brass | Katrollen | Rodillos para alambre | Argano a fune | Polia |
| 4 | F380 | ø7x2,2mm | Brass | Conische schijf | Disco conico | Disco conico | Disco cônico |
| 1 | F382 | ø16x3mm | Brass | Katrollen | Rodillos para alambre | Argano a fune | Polia |
| 2 | F392 | 22mm | Brass | Schroefas | Je de helice | Albero porta-elica | Eixo da hélice |
| 5 | F409 | Ø1,5mm x 250mm | Brass | Messingdraad | Hilo de latón | Filo in ottone | Fio de latão |
| 3 | F410 | Ø2mm x 250mm | Brass | Messingdraad | Hilo de latón | Filo in ottone | Fio de latão |

| | | | | | | | |
|---|---|---|---|---|---|---|---|
| 4 | F418 | ø10x9mm | Brass | Schijnwerper | Foco | Proiettore | Holofote |
| 4 | F419 | ø10x3mm | Plastic | Schijnwerper | Foco | Proiettore | Holofote |
| 8 | F420 | ø1,5x5mm | Brass | Schijnwerper | Foco | Proiettore | Holofote |
| 2 | F475R | 22x32mm | Plastic | Schroefas met steun | Je de helice, soporto | Supporto albero portaelica | Eixo da hélice, suporte |
| 2 | F475L | 22x32mm | Plastic | Schroefas met steun | Je de helice, soporto | Supporto albero portaelica | Eixo da hélice, suporte |
| 2 | F476-1 | 93mm | Brass | Roerkoning | Tronco del timon | Tronco del timone | Suporte do timão |
| 2 | F476-2 | 27mm | Brass | Roerkoning | Tronco del timon | Tronco del timone | Suporte do timão |
| 2 | F477 | 36x85x71mm | Plastic | Straalbuizen | Boquillas | Bocchettoni | Bocais |
| 1 | F479R | Ø50mm/M4 | Plastic | Schroet | Hélice | Elica | Hélice |
| 1 | F479L | Ø50mm/M4 | Plastic | Schroet | Hélice | Elica | Hélice |
| 2 | F594 | Ø8x6,4mm | Brass | Spilkop | Tambor de cabrestante | Testa argano | Terminal |
| 2 | F595 | Ø6x4mm | Brass | Rol | Rodillo | Puleggia | Carretel |
| 1 | F616 | Ø4x4mm | Brass | Boordlichten | Linternas | Lanterna di bordo | Luzes |
| 10 | F663 | 0,75mm | Brass | Messingdraad | Hilo de latón | Filo in ottone | Fio de latão |
| 2 | F664 | 11mm | Brass | Oogbauten | Pernos de cáncamo | Bullone ad occhio | Ferrolho |
| 2 | B2-115 | Ø4x3,2mm | Brass | Rol | Rodillo | Puleggia | Carretel |
| 6 | F692 | Ø10x21mm | Brass | Reddingsvlot | Balsa salvavidas | Zattera di salvataggio | Salva-vidas |
| 4 | F717 | 2,5x22x0,4mm | Brass | Schijnwerper | Foco | Proiettore | Holofote |
| 4 | F893 | Ø4x5,5mm | Brass | Motor | Motor | Motore | Motor |
| 2 | F933 | Ø13x9mm | Brass | Gangspil | Cabrestante | Argano | Cabrestante |
| 2 | F934 | 13,5x30x67mm | Plastic | Rubberboot | Caucho barco | Gommone | barco de borracha |
| 2 | F935 | 16x4,5x12,5mm | Plastic | Rubberboot, Motor | Caucho barco, Motor | Gommone, Motore | barco de borracha, Motor |
| 2 | B2-080 | Ø5x4mm | Brass | Waterkanon | Cañones de agua | Cannone acquatico | Canhão de água |
| 1 | TR 180 | | | Transfers | Transfer | Decalcomanie | Decalcomanias |
| 1 | | | | Bouwbeschrijving | Instr. de constr. | Istruzioni di montaggio | Instruções de montagem |
| 1 | | 50-50101 | | Tekening | Ilustración | Piani di costruzione | Planta principal |
| 1 | | 150x210mm | | Acetaat | Acetata | Acetato | Acetato |

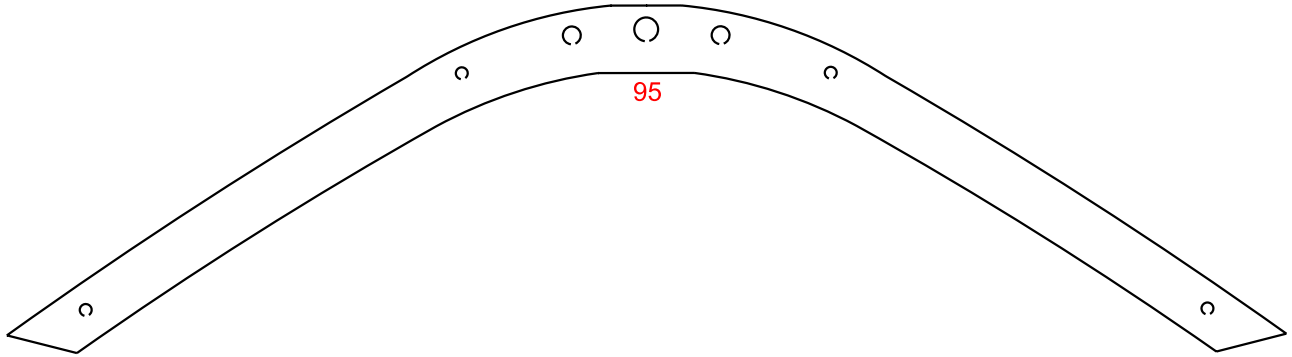

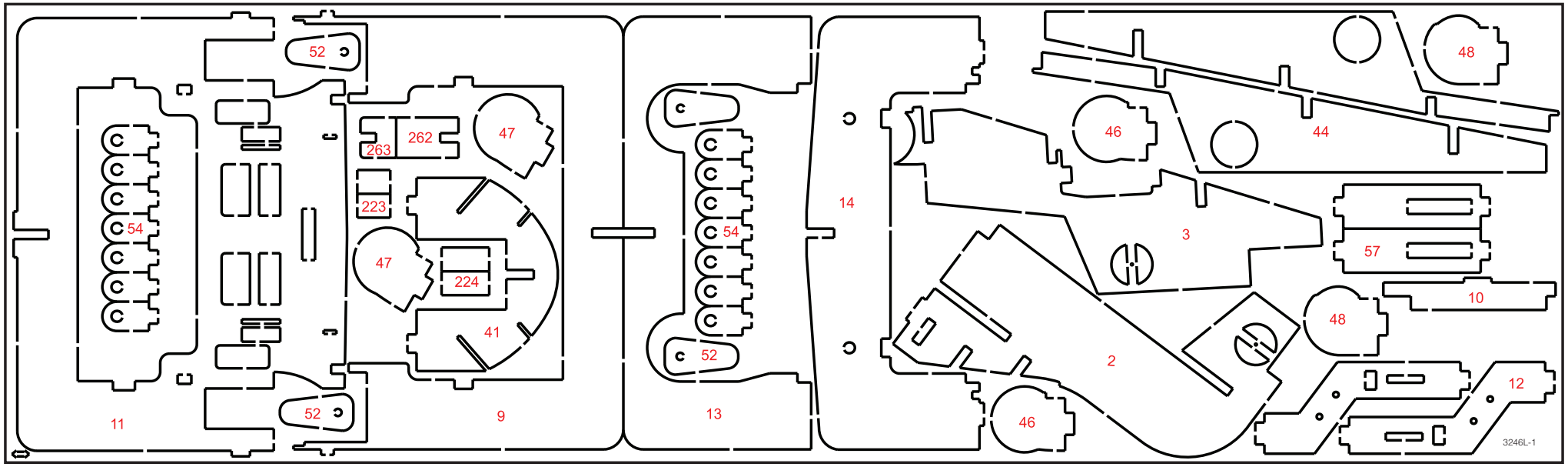
52
263
262
47
223
54
47
224
41
52
11
9
54
52
13
14
48
46
44
3
57
10
48
2
12
46
3246L-1

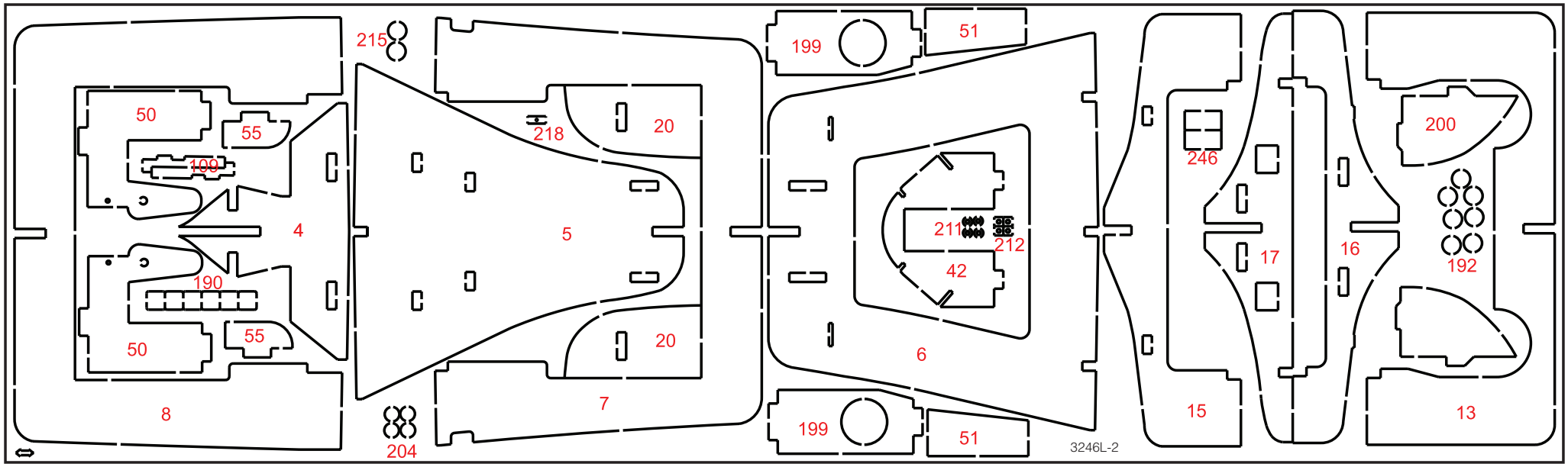
215
50
55
199
4
190
50
55
8
218
20
5
20
7
204
199
51
211
212
42
6
199
51
246
17
15
16
200
192
13
3246L-2

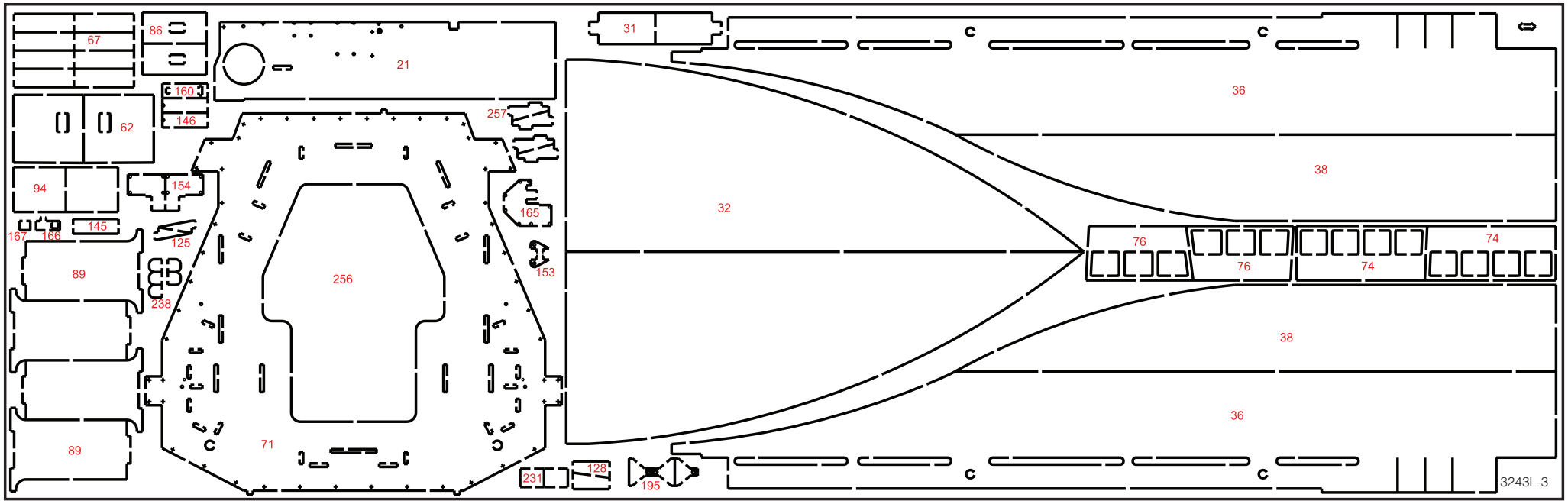
67
86
21
31
36
160
146
62
257
38
94
154
165
32
167
166
145
125
76
74
89
256
153
238
38
36
71
89
231
128
195
3243L-3

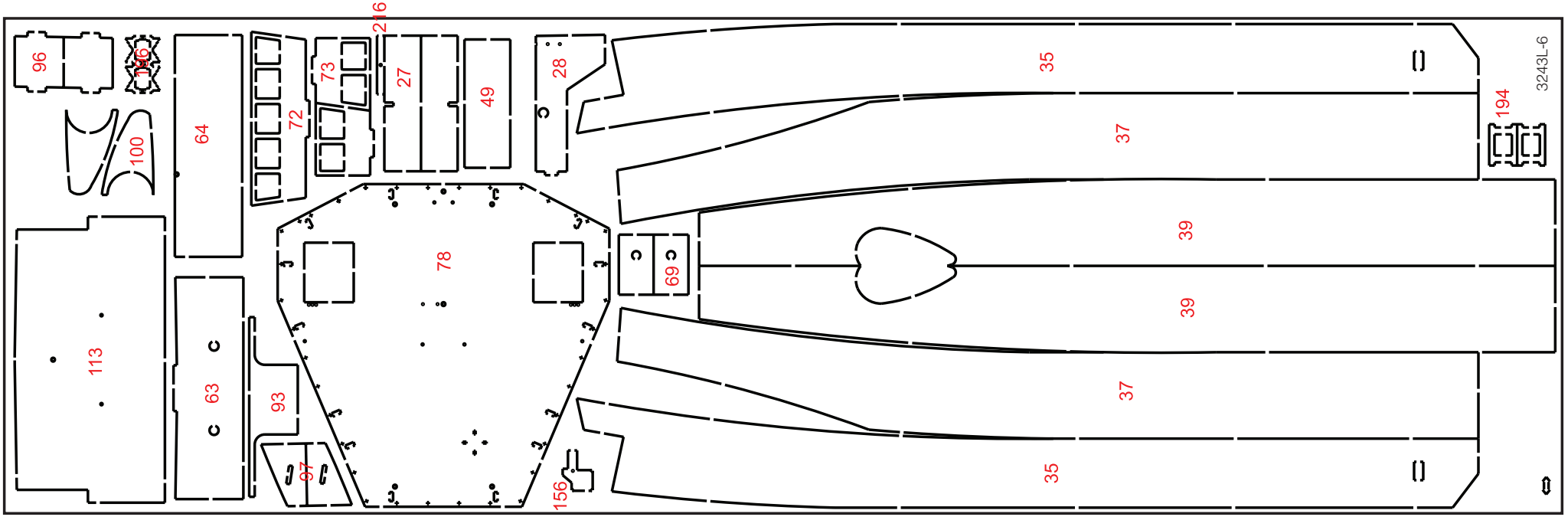
216
96
146
73
27
28
35
3243L-6
64
72
49
194
100
37
39
78
69
39
113
63
93
37
97
156
35

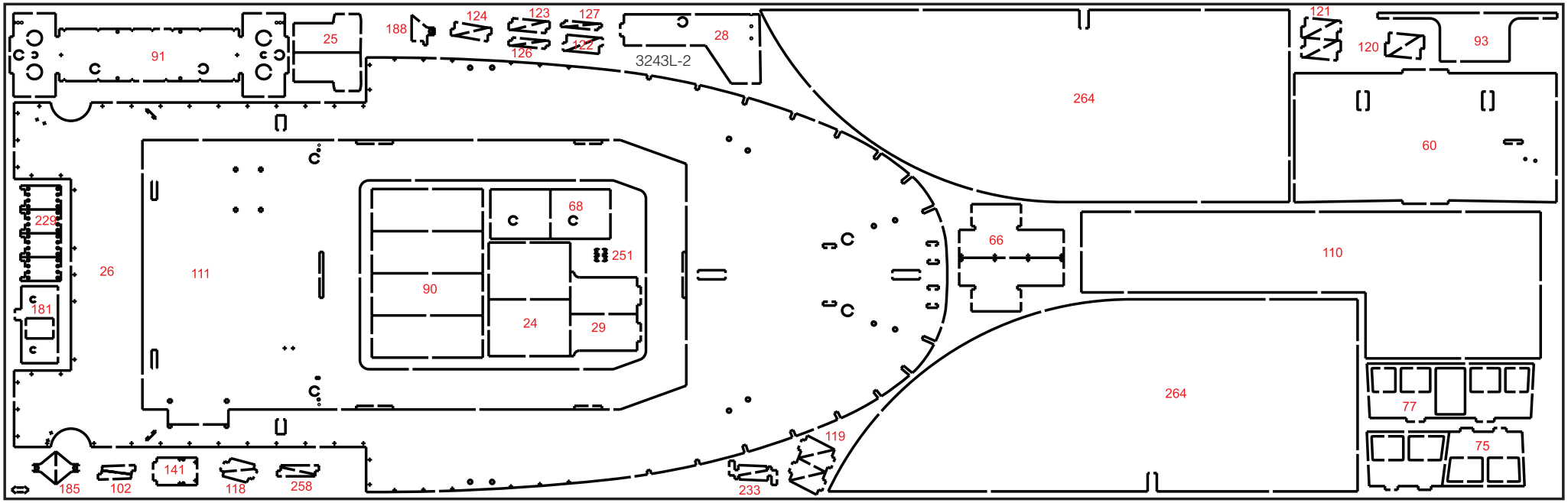
3243L-2
91
25
188
124
123
127
126
122
28
264
121
120
93
60
229
26
111
68
251
90
24
29
66
110
181
264
77
75
185
102
141
118
258
119
233

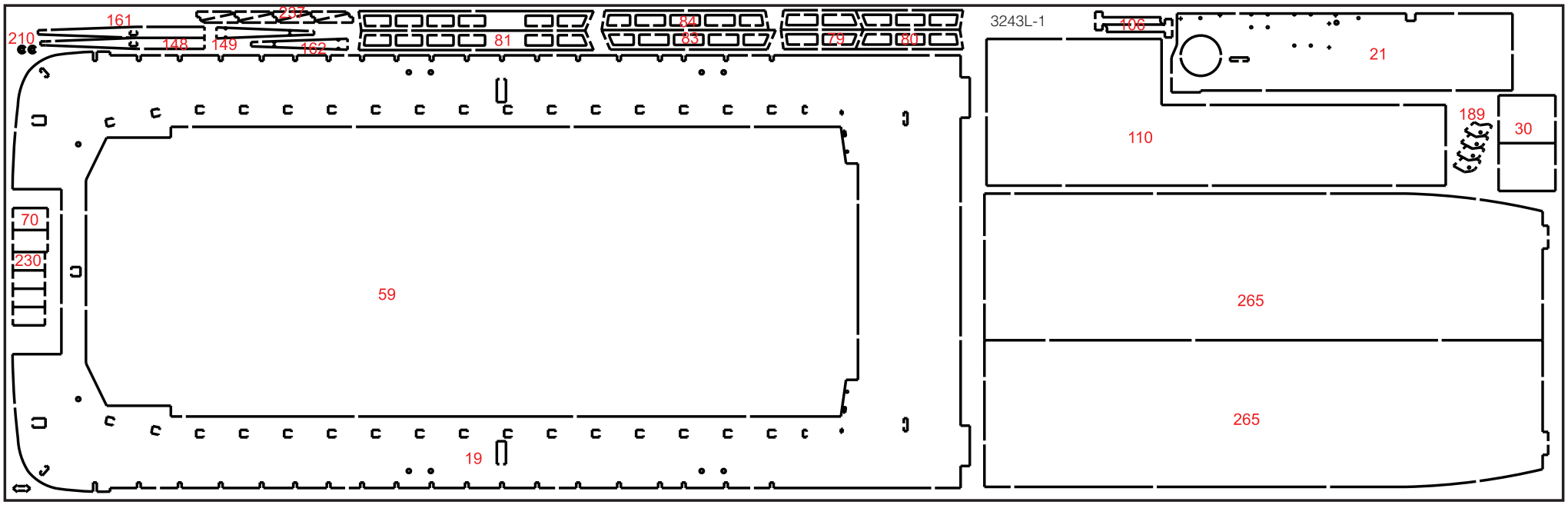
3243L-1
161
237
210
148
149
162
81
84
83
79
80
106
21
110
189
30
70
230
59
265
265
19

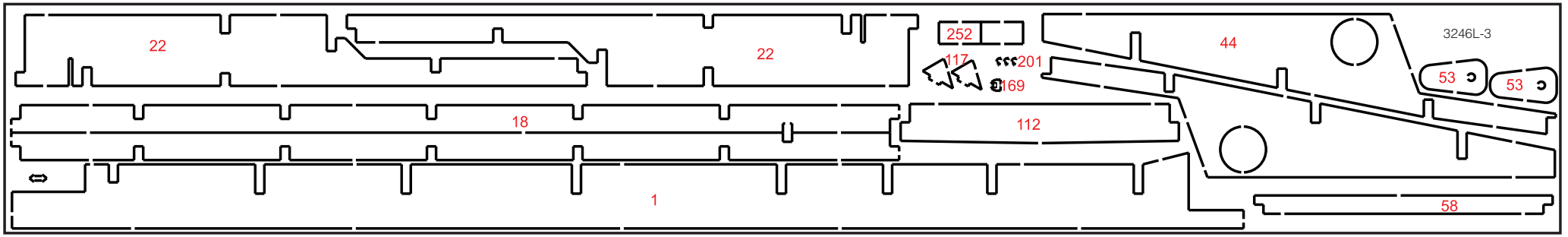
22
22
252
117
201
169
44
3246L-3
53
53
18
112
1
58

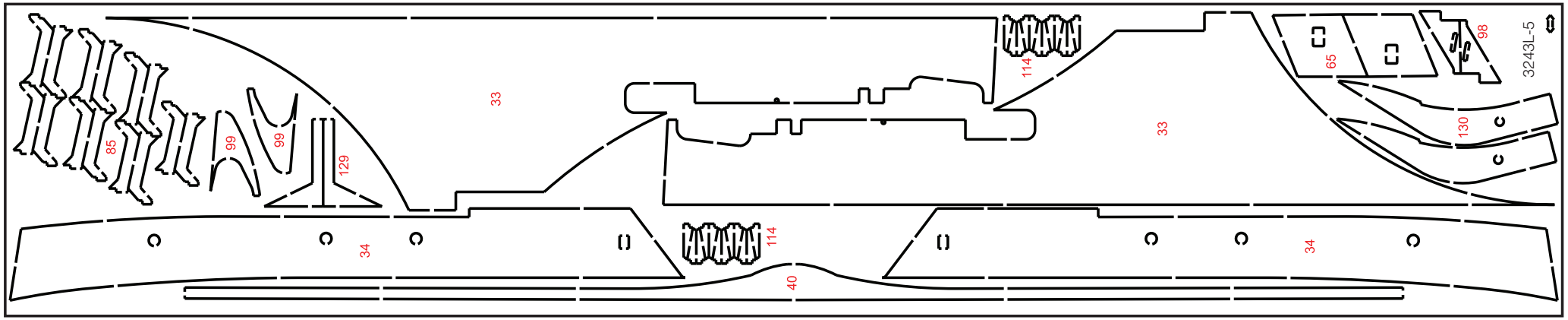
33
114
65
98
3243L-5
85
99
99
129
33
130
34
114
34
40

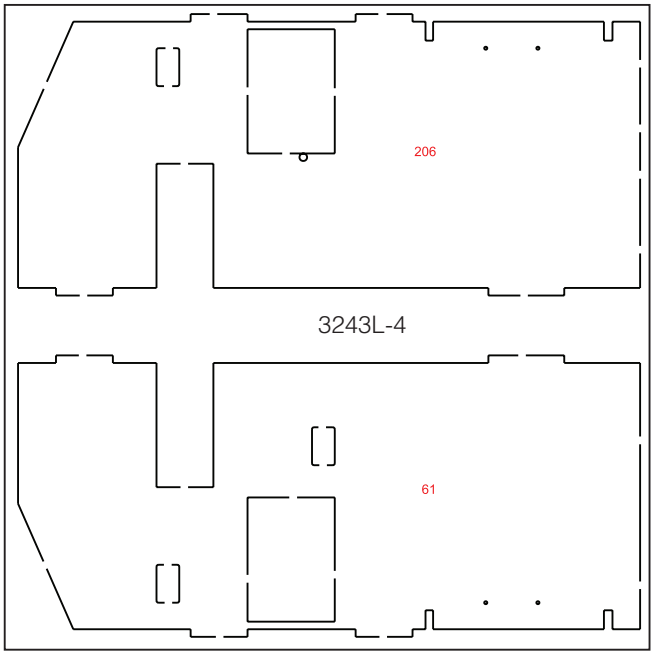
206
3243L-4
61

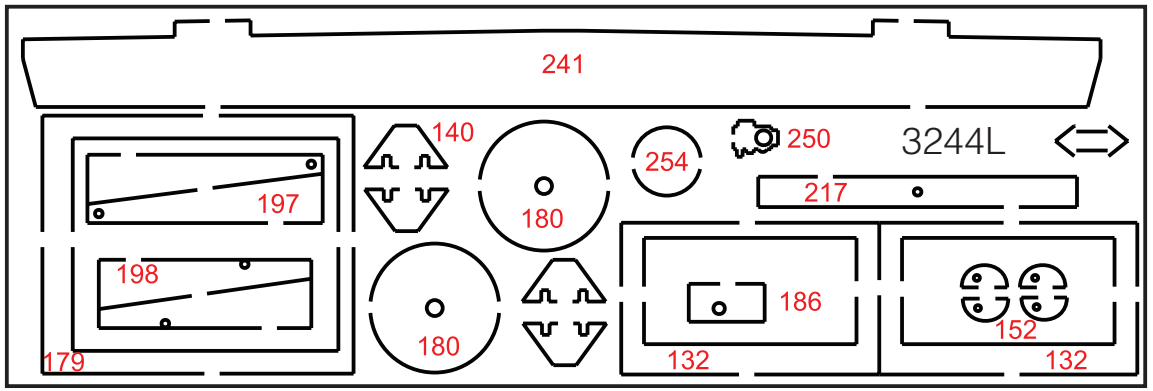
241
140
250
3244L
254
197
180
217
198
186
180
179
132
152
132

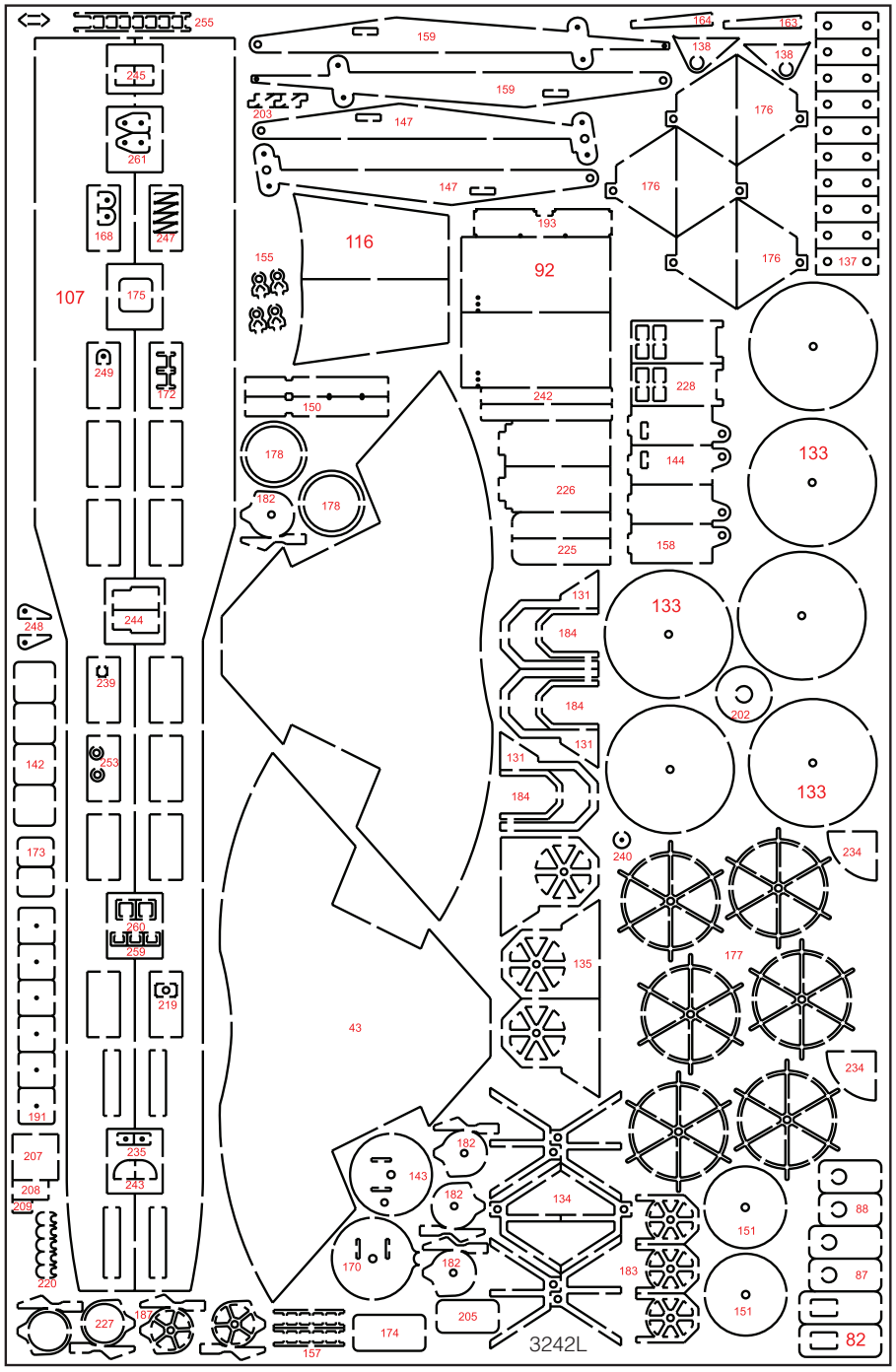
3242L

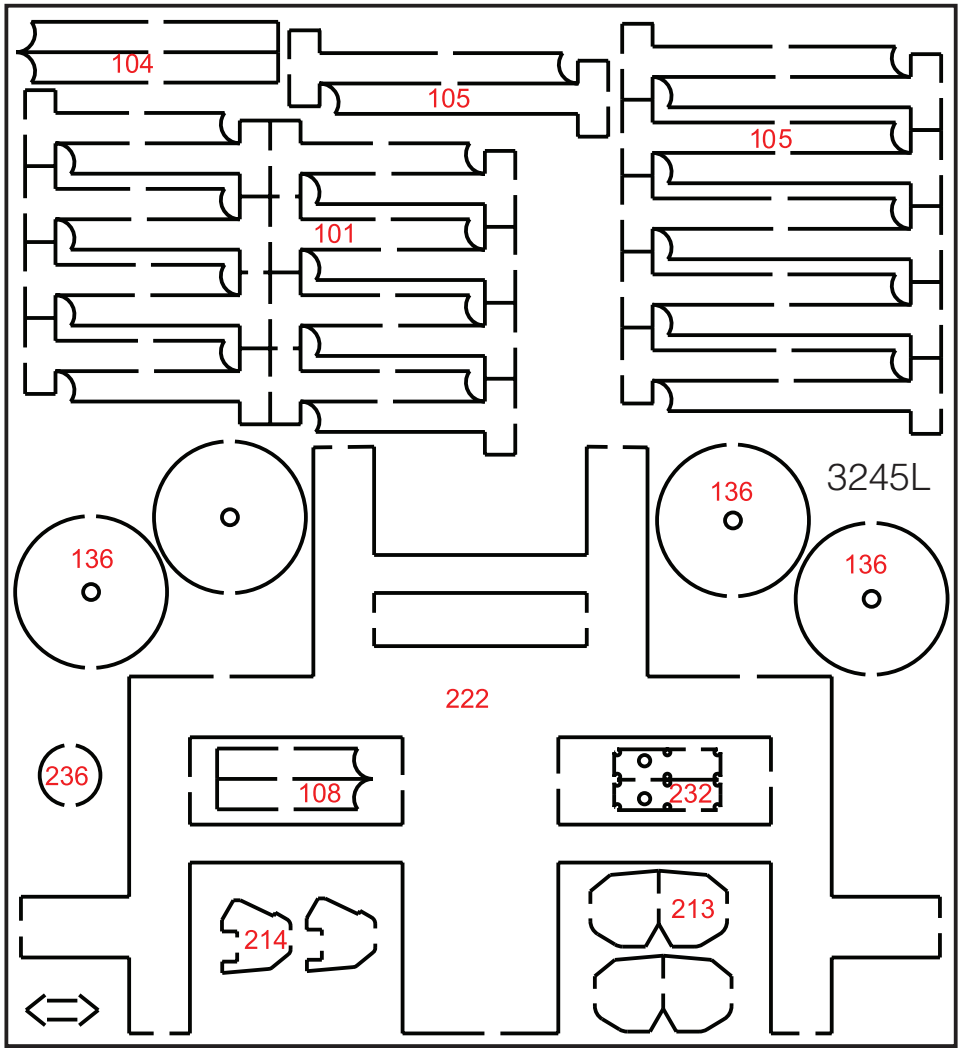
3245L

Fig. 1

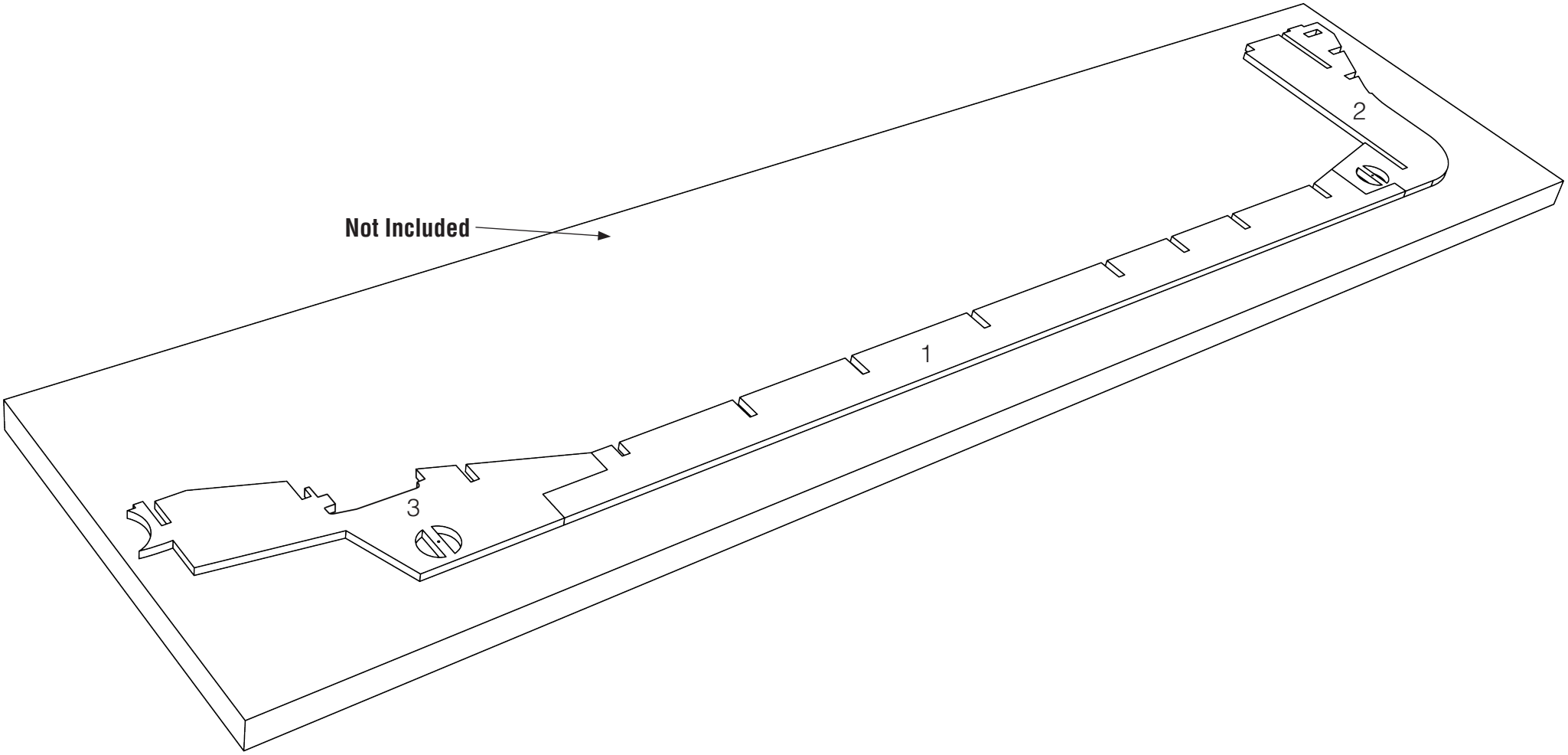

Fig. 2

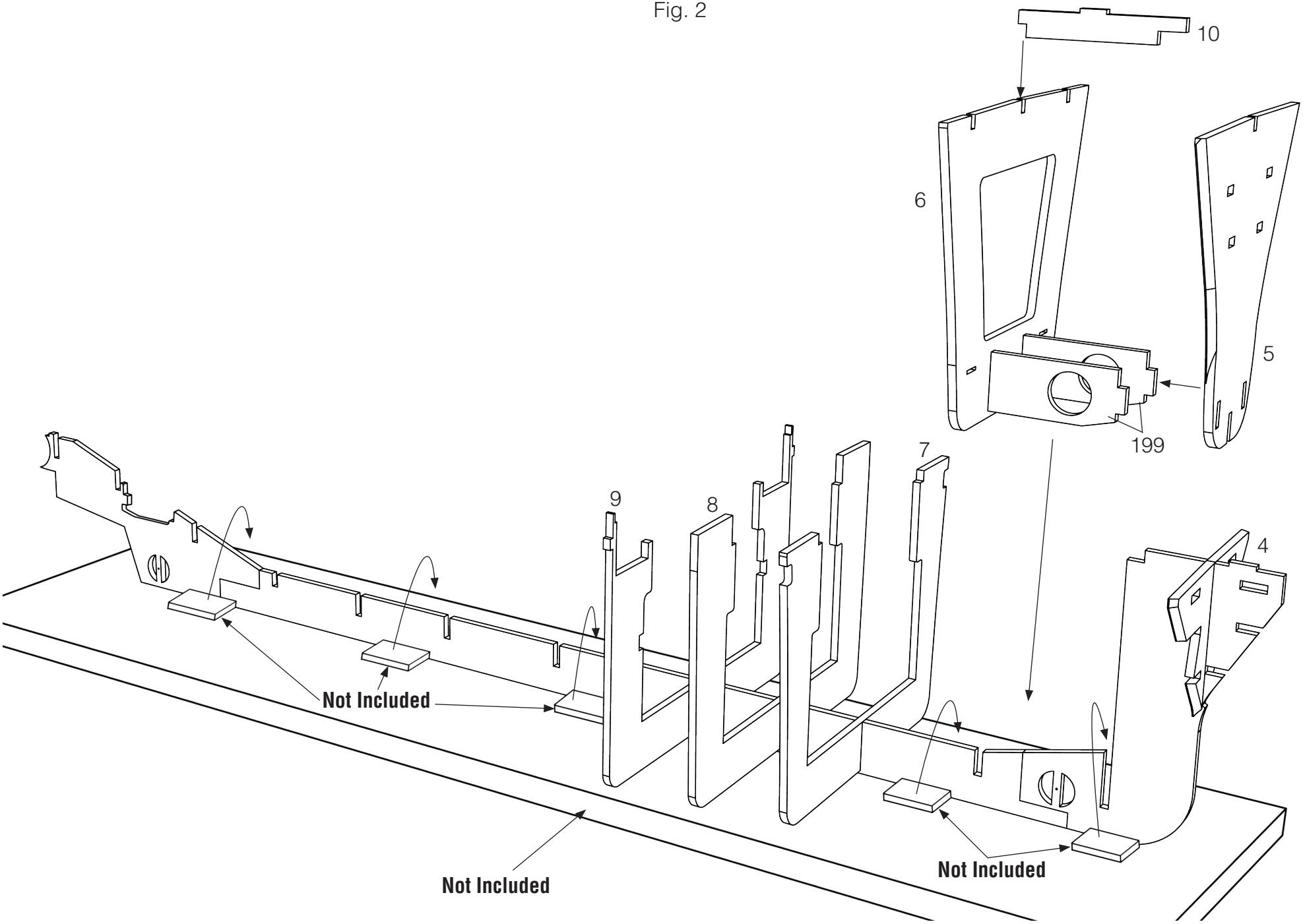

Fig. 3

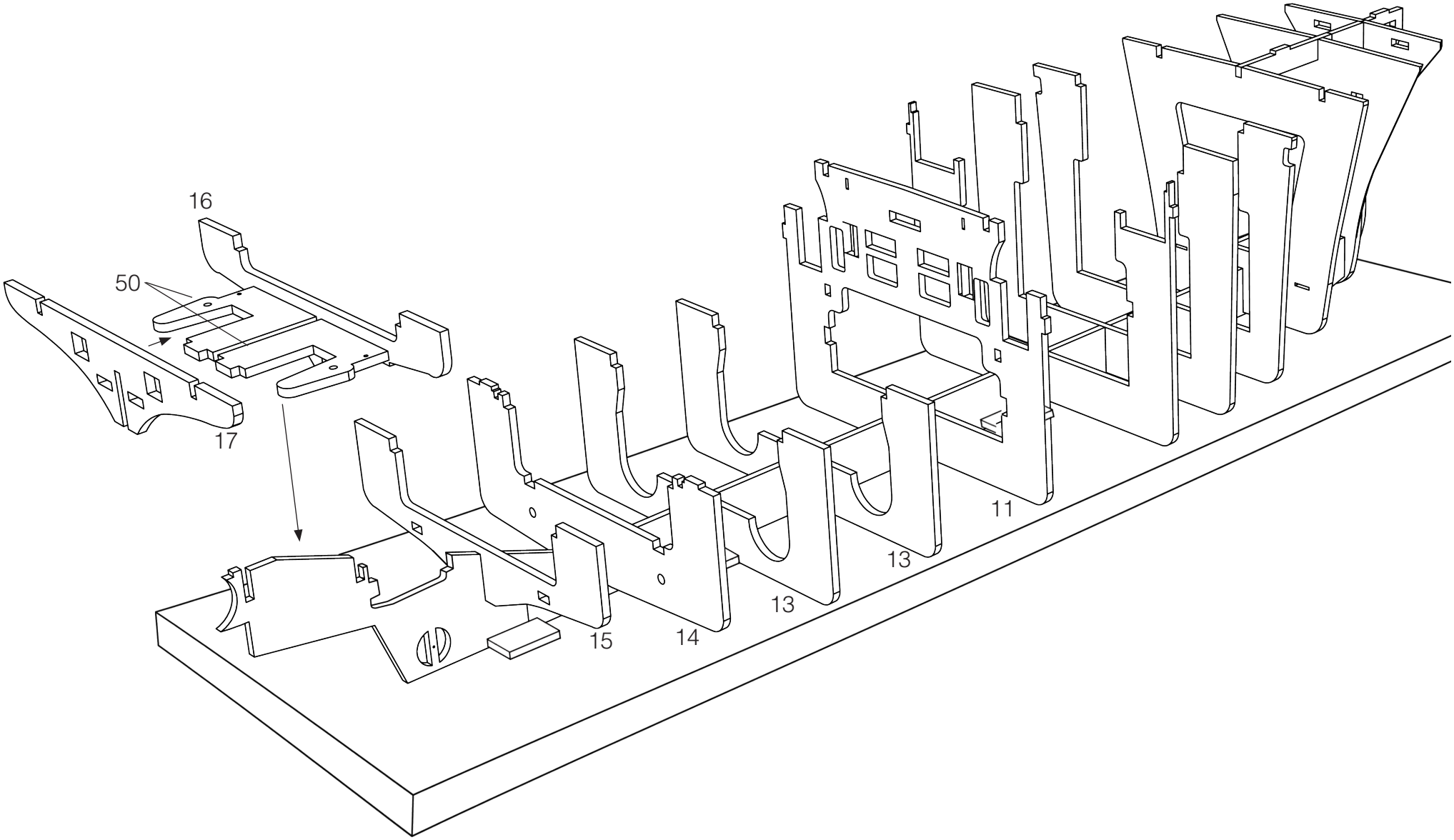

Fig. 4

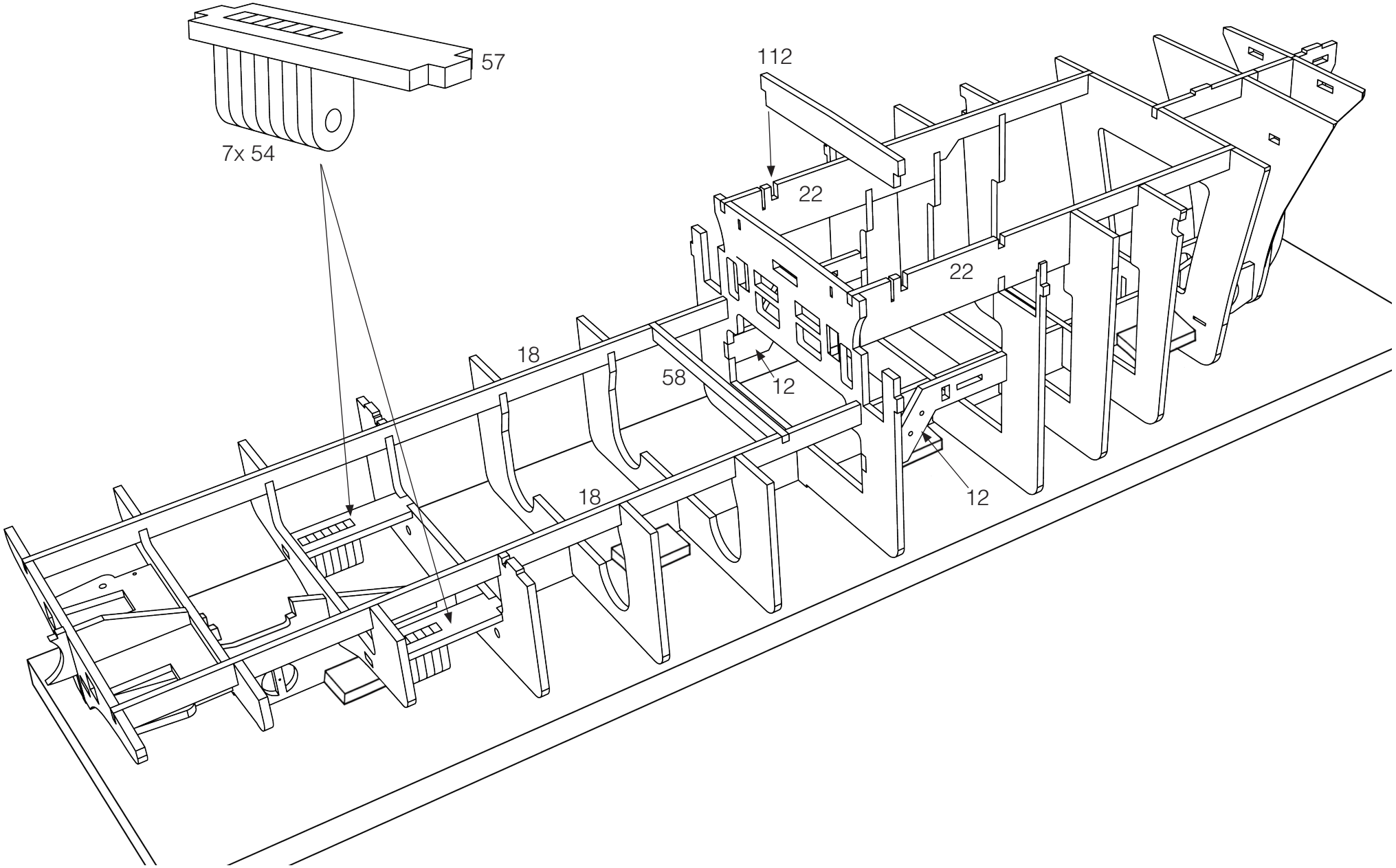

Fig. 5

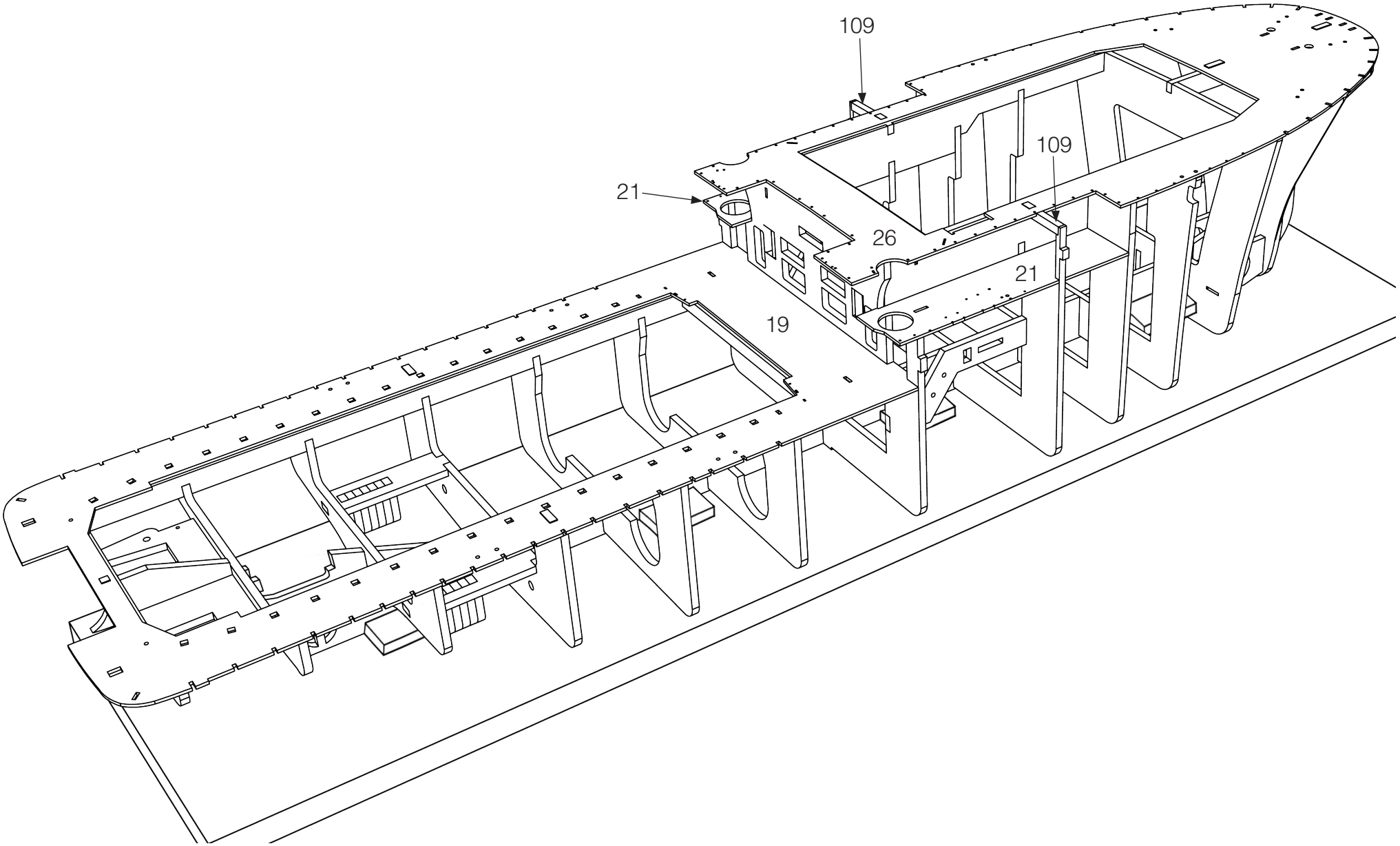

Fig. 6

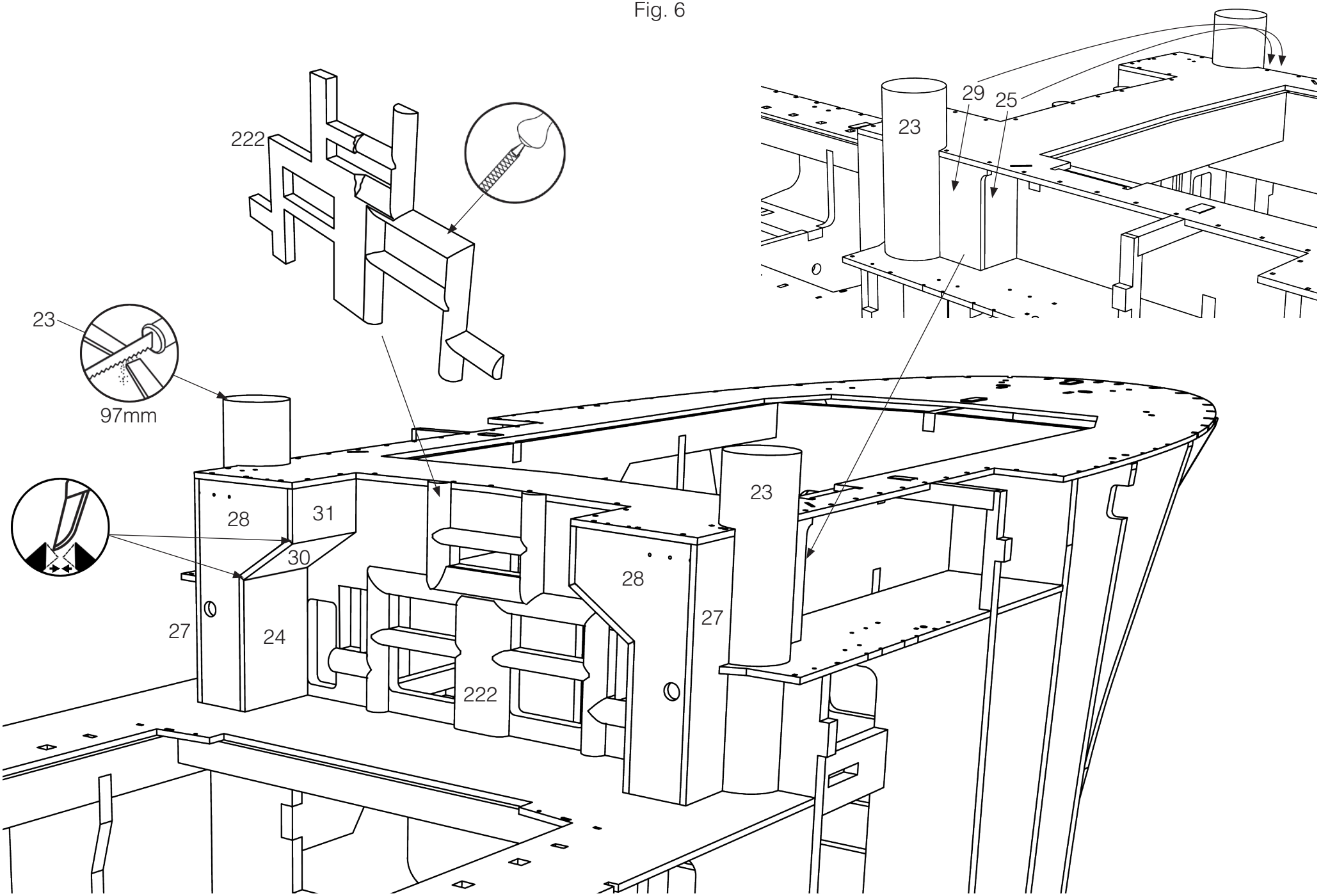

Fig. 7

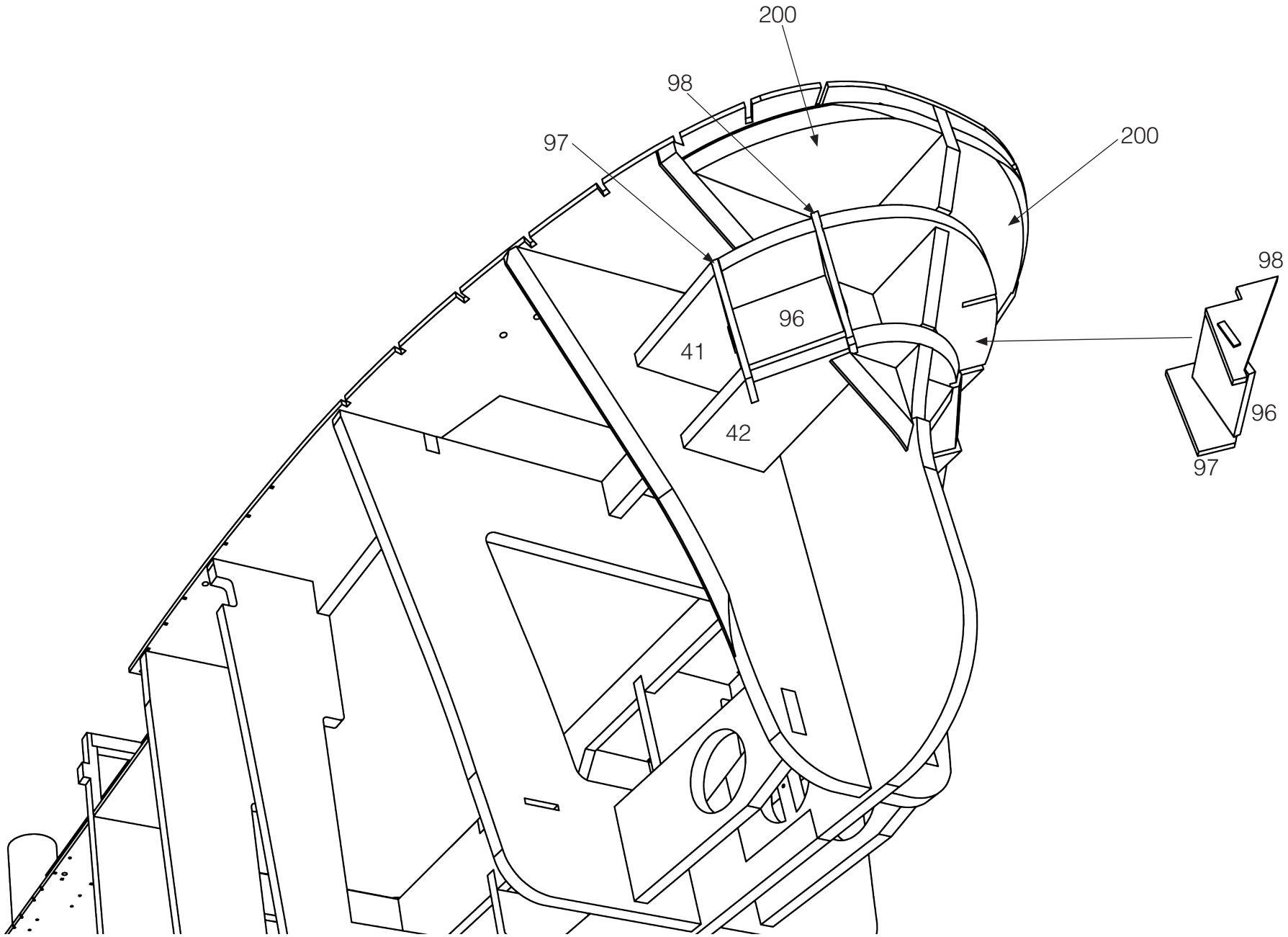

Fig. 8

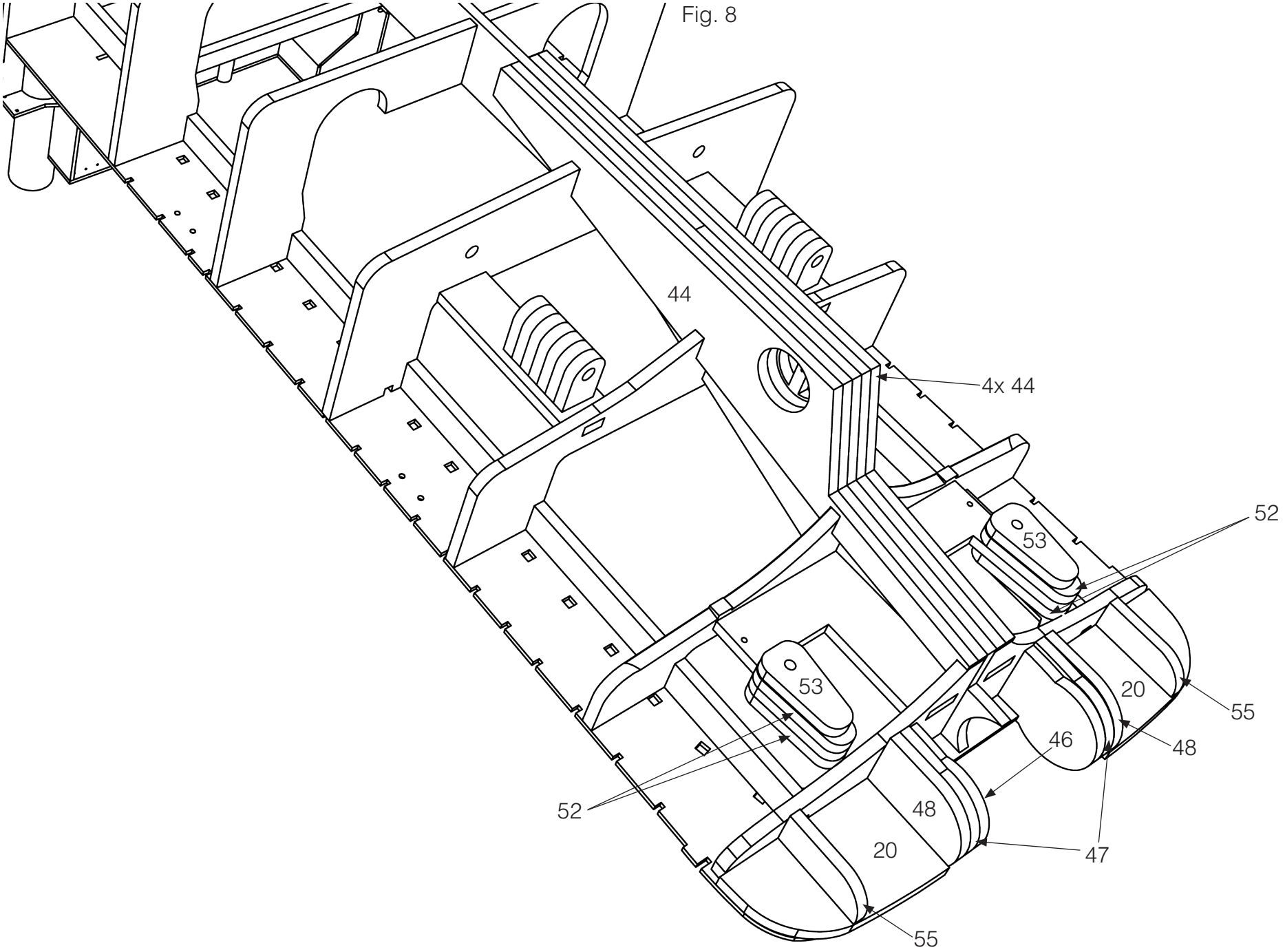

Fig. 9

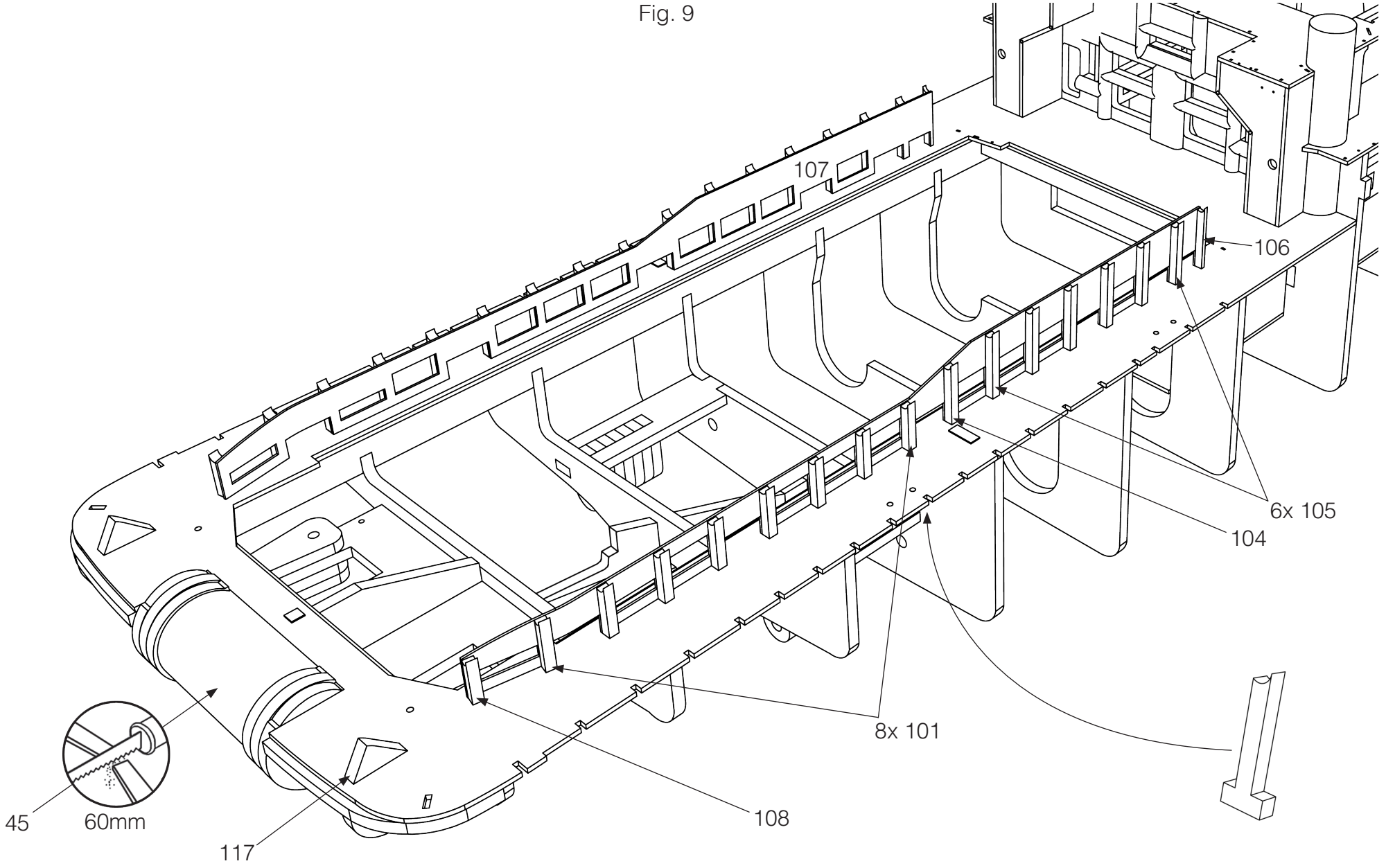

Fig. 10

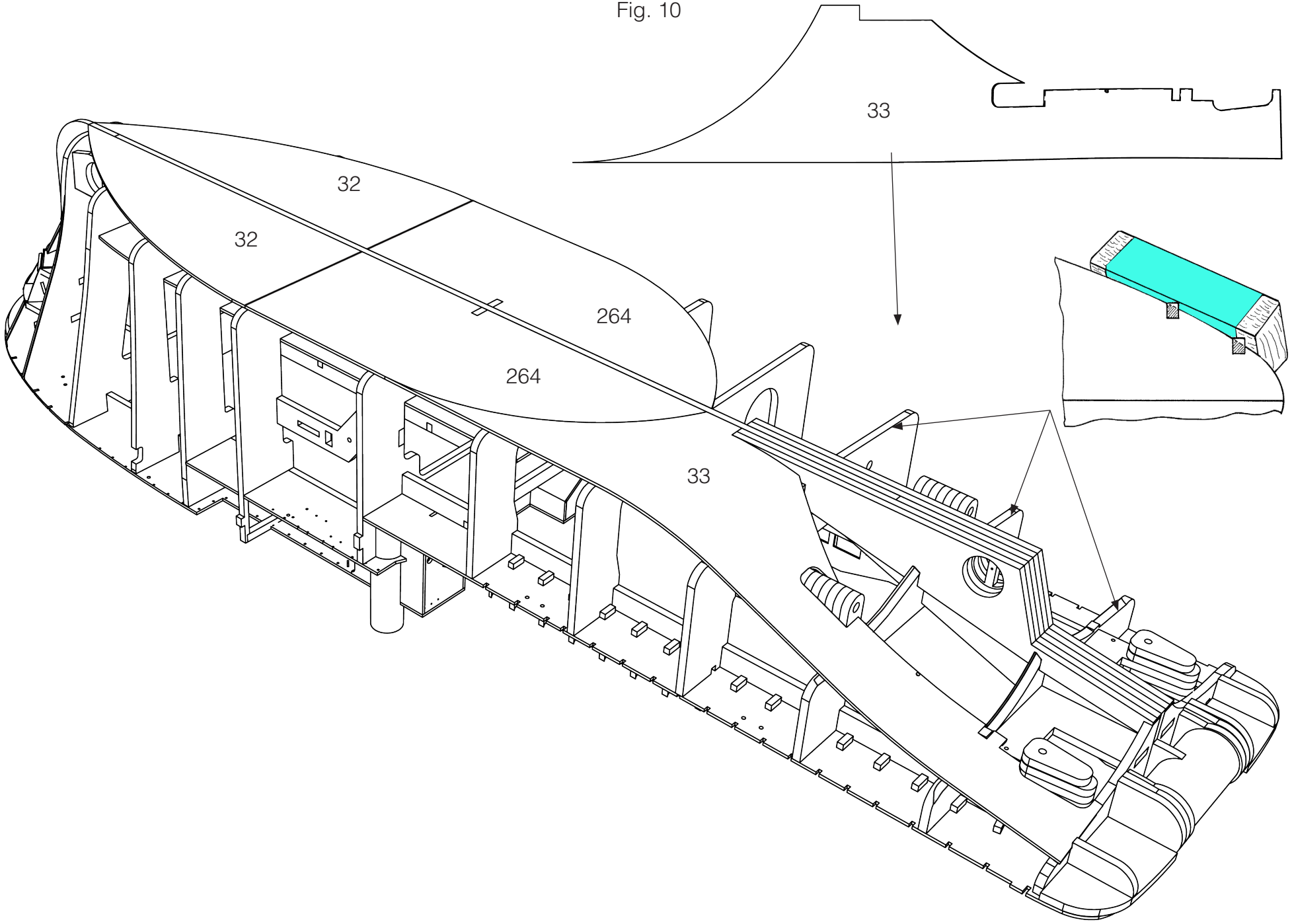

Fig. 11

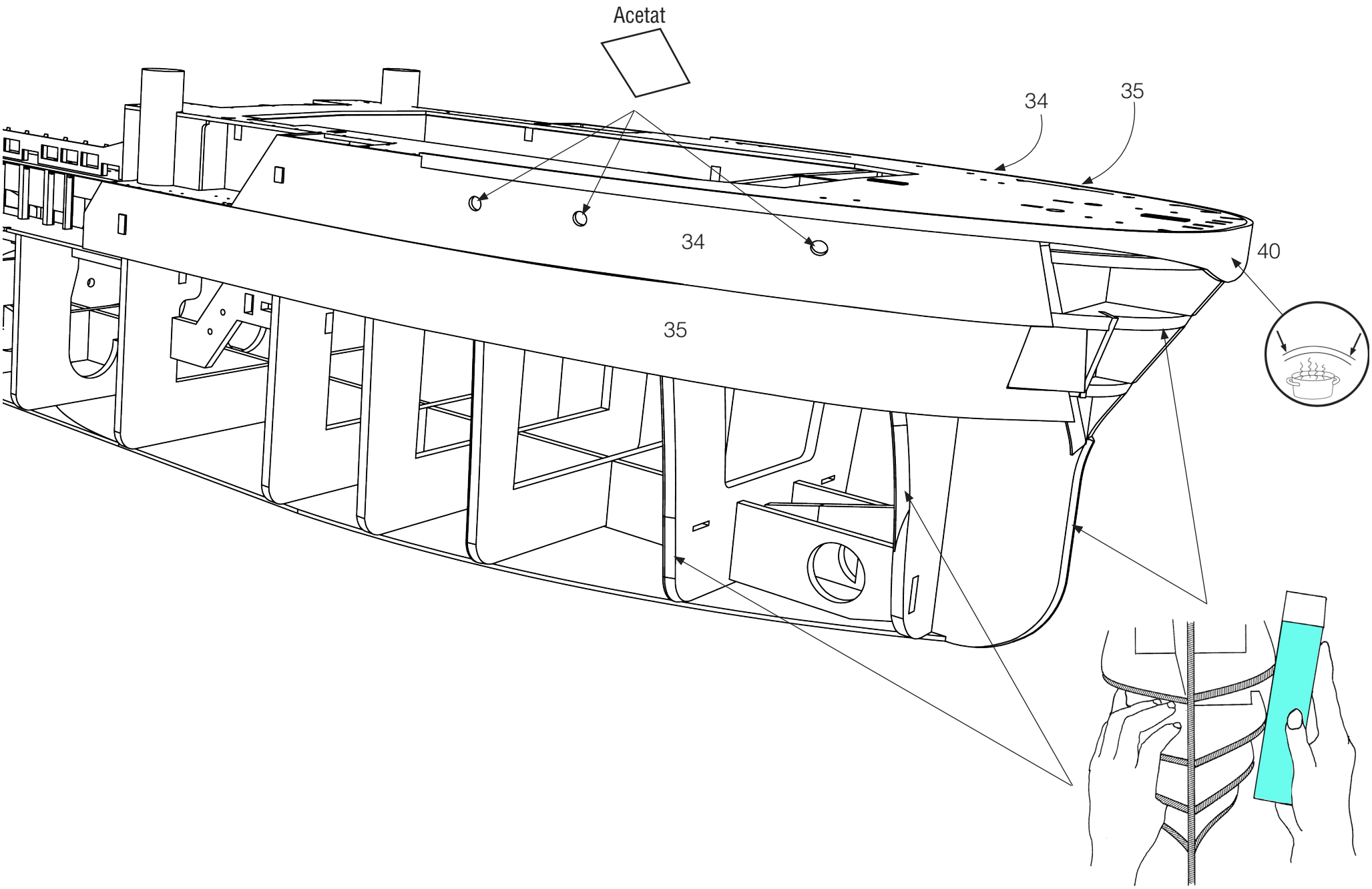

Fig. 12

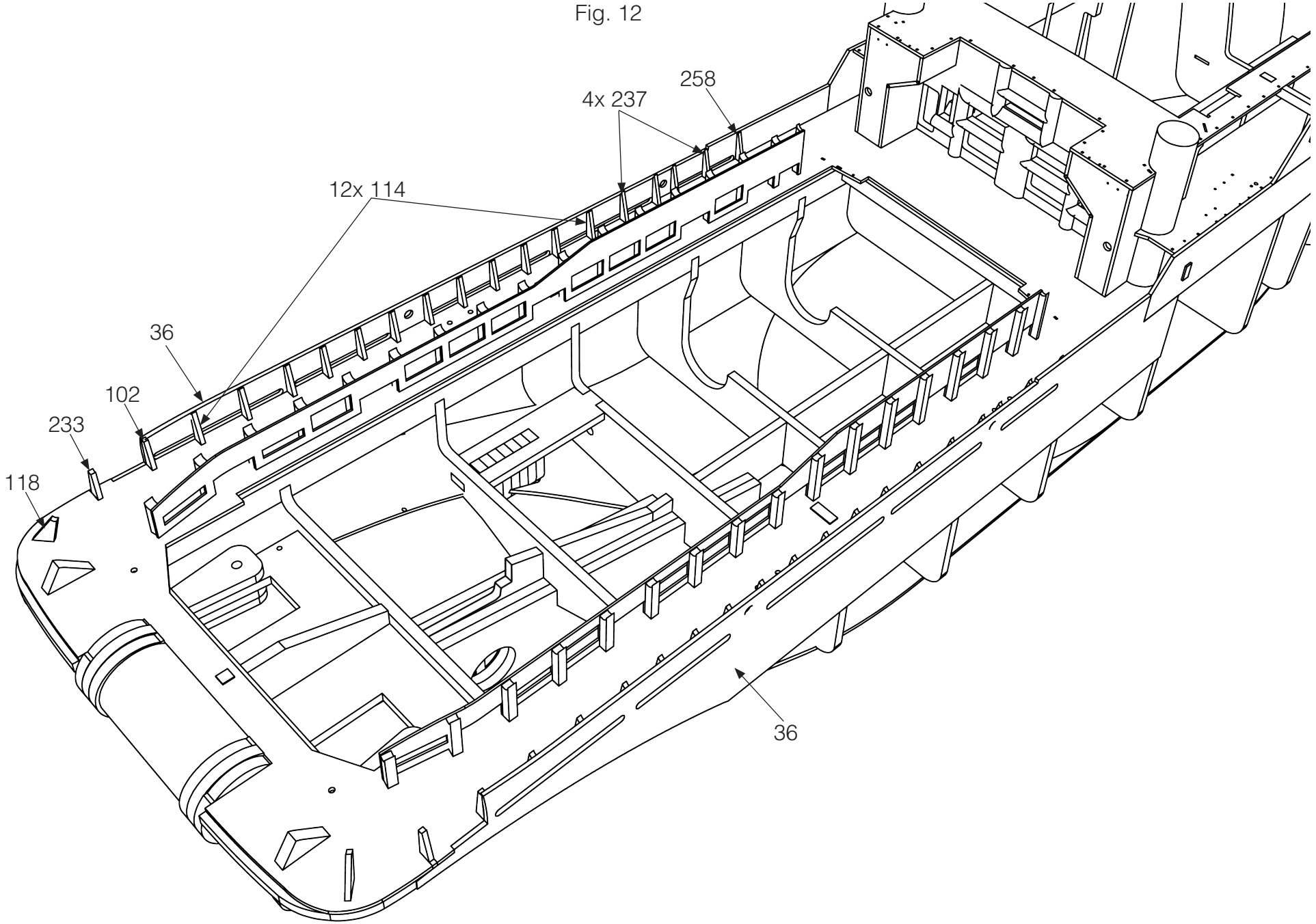

Fig. 13

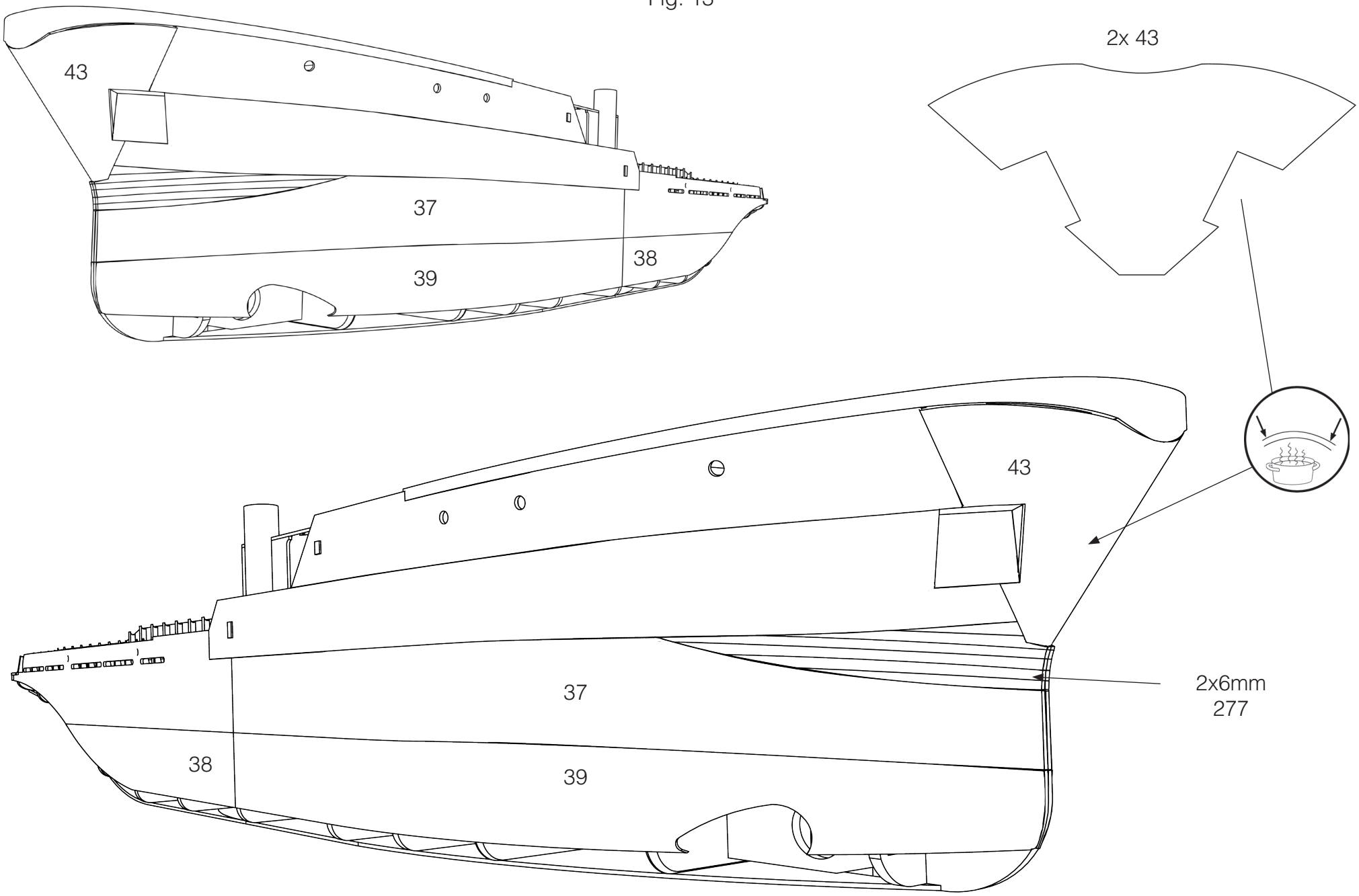

Fig. 14

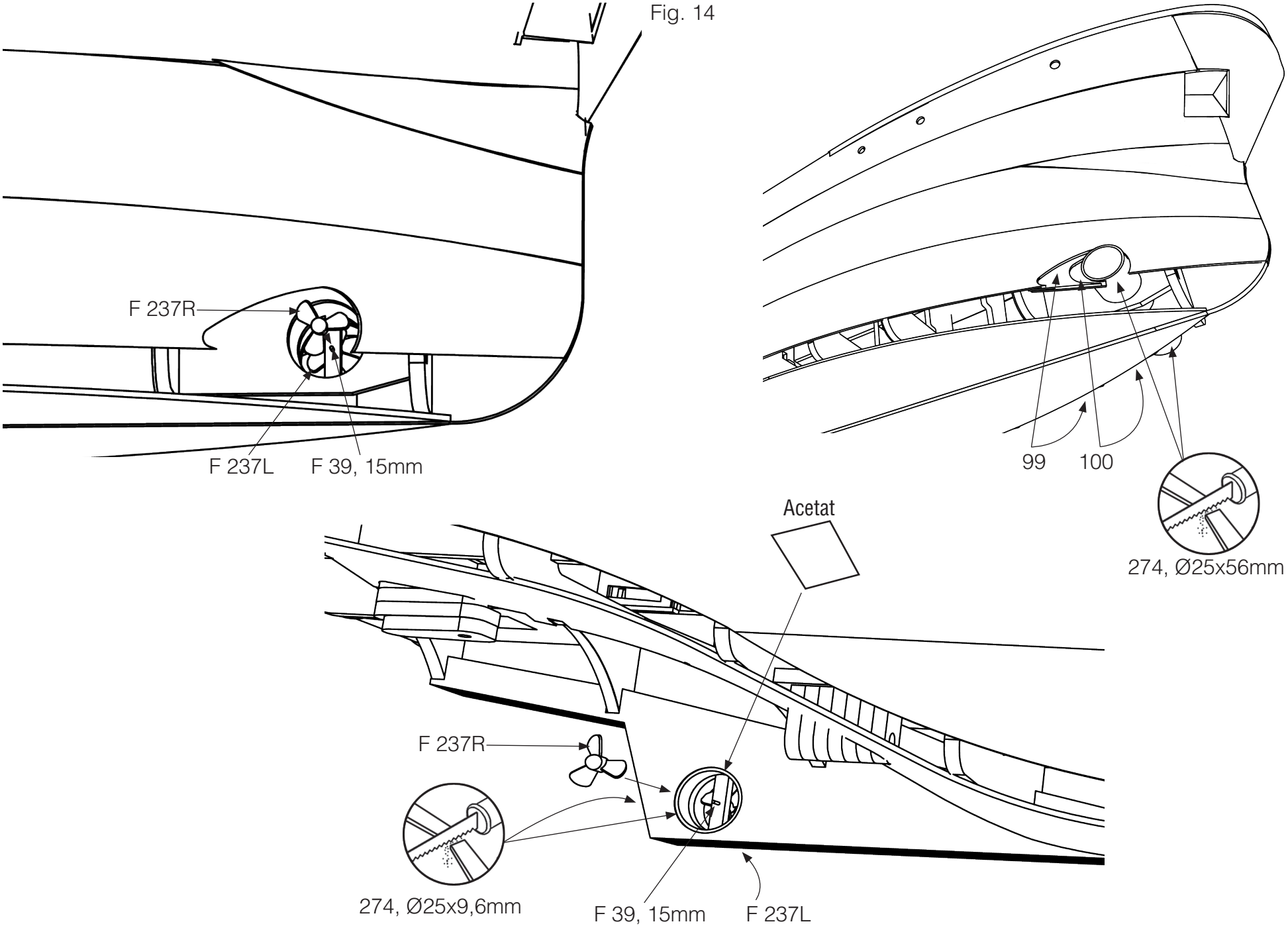
F 237R
F 237L
F 39, 15mm
99
100
274, Ø25x56mm
Acetat
F 237R
274, Ø25x9,6mm
F 39, 15mm
F 237L

Fig. 15

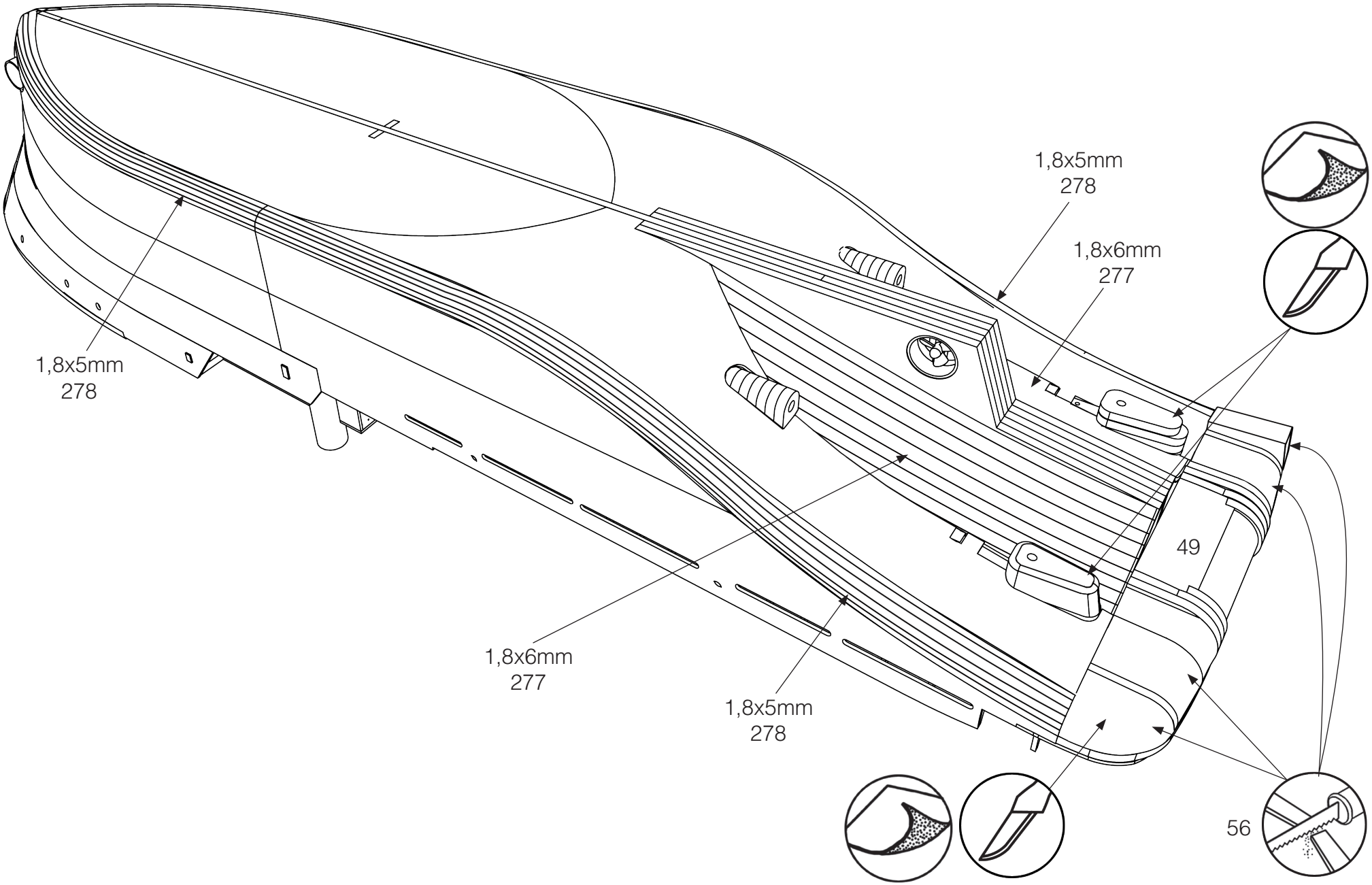

Fig. 16

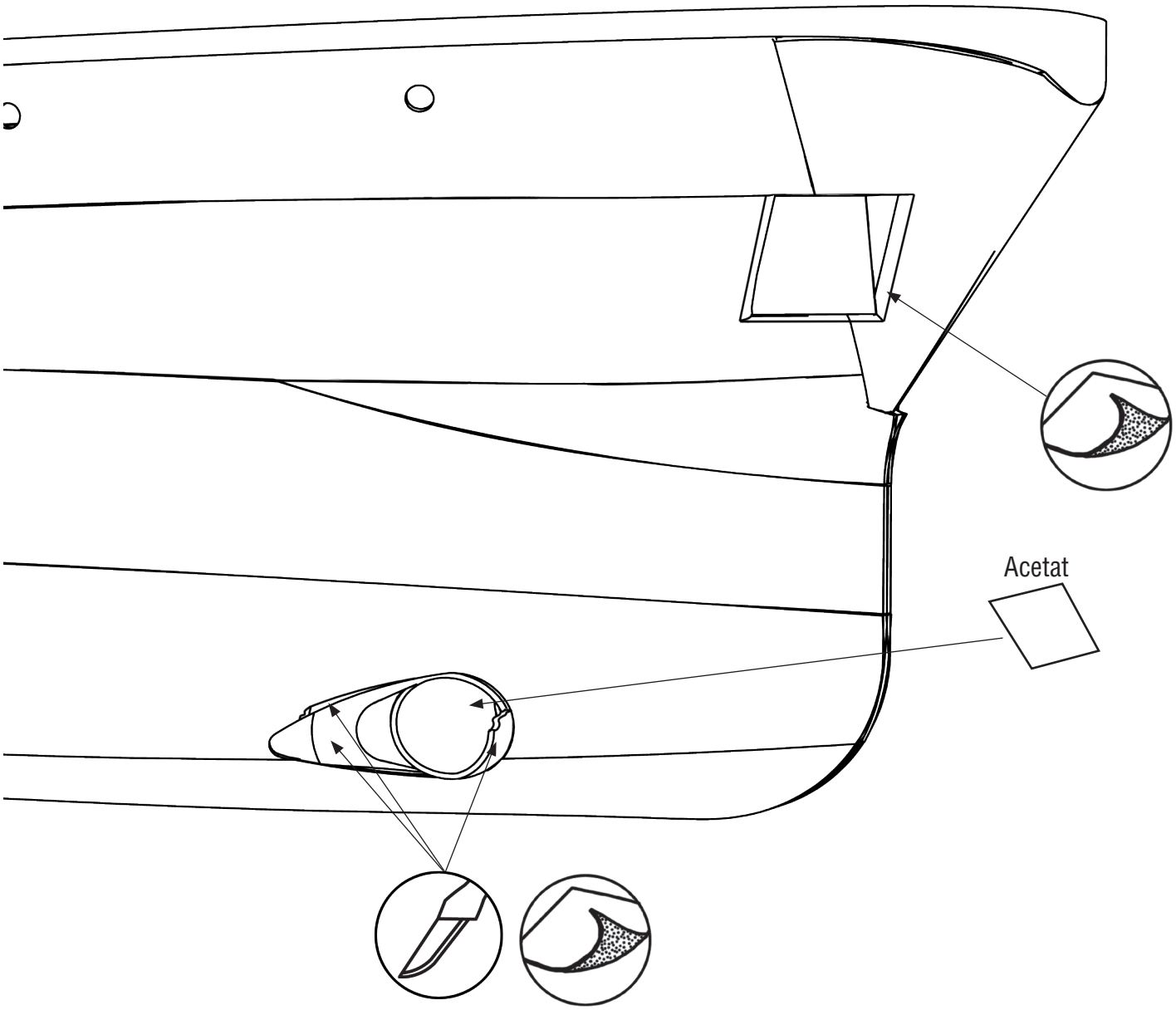

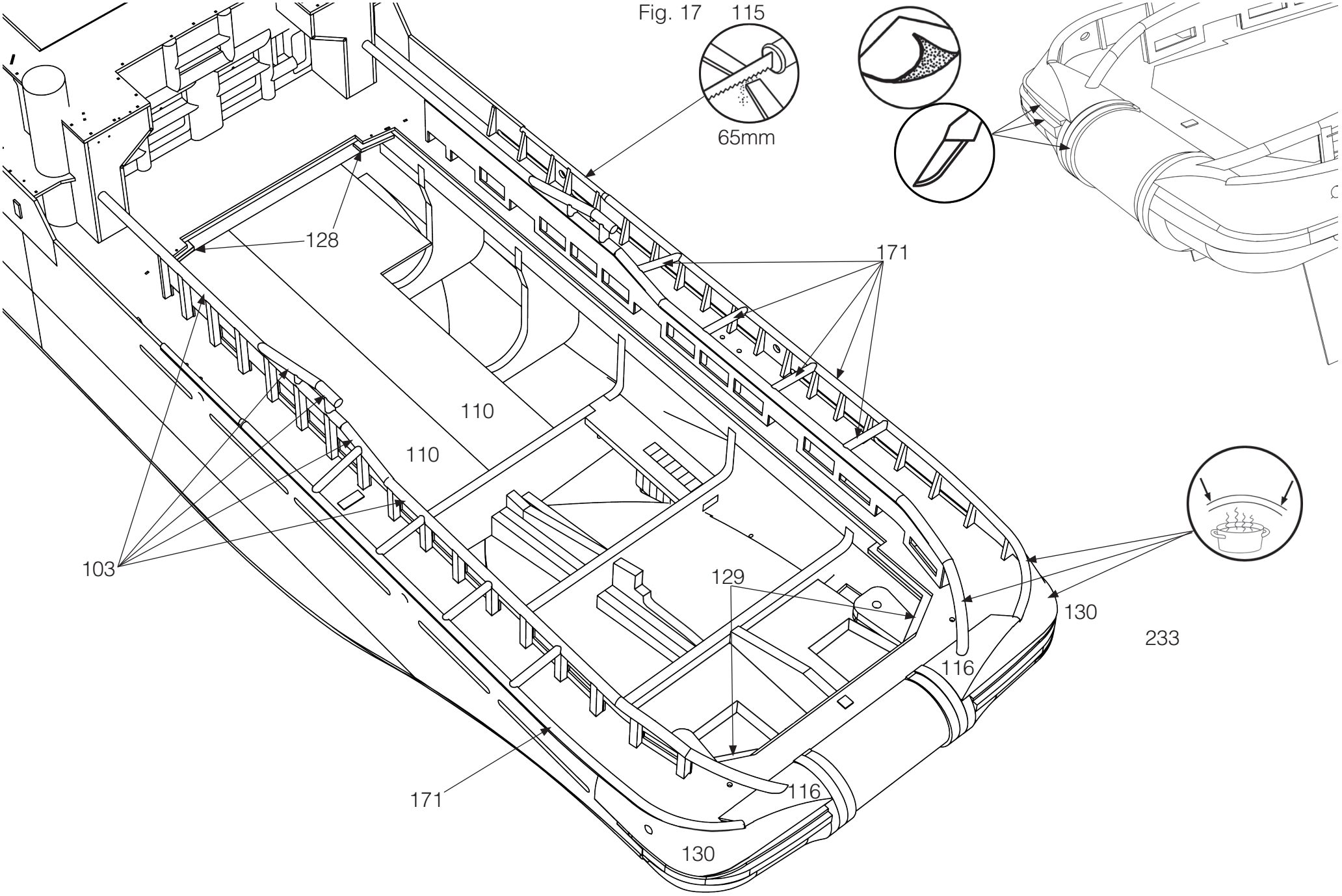
Fig. 17
115
65mm
128
171
110
110
103
129
130
233
116
171
116
130

Fig. 18

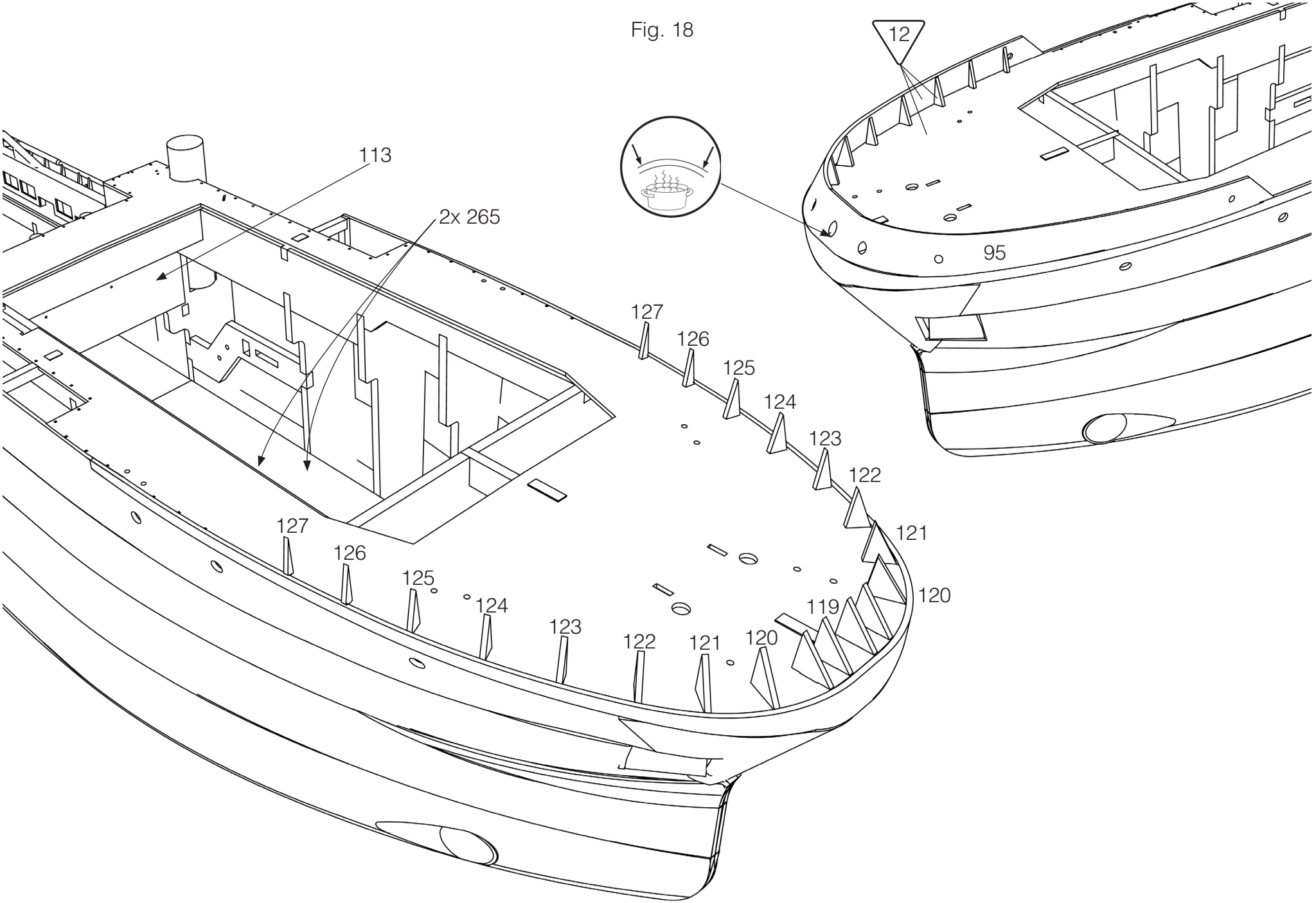
12
95
113
2x 265
127
126
125
124
123
122
121
120
119
127
126
125
124
123
122
121
120

Fig. 19

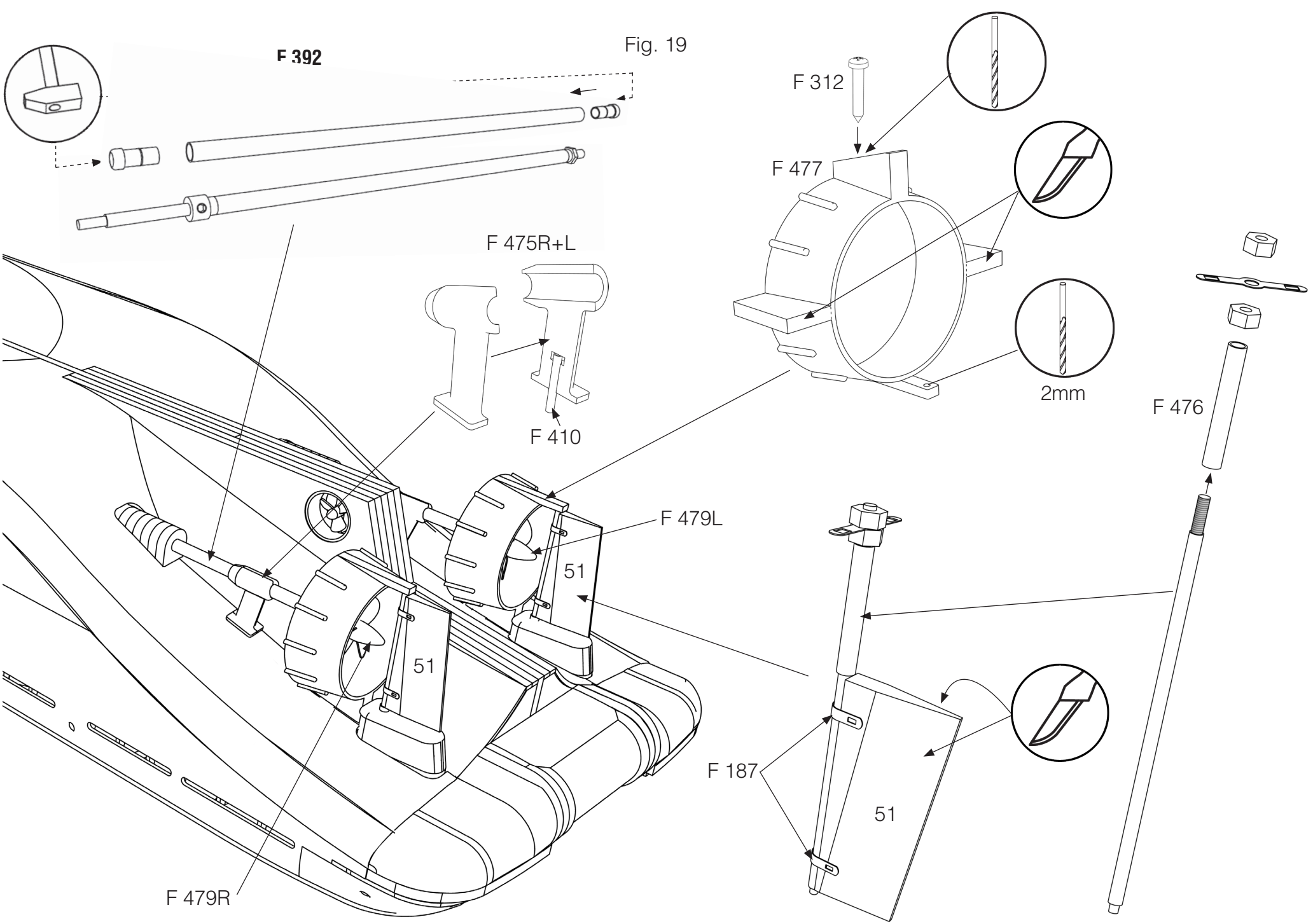

R/C KIT ILLUSTRATED ARE
NOT INCLUDED IN KIT

-

Billing Boats does not offer support for RC

Fig. 20

R/C Diagram

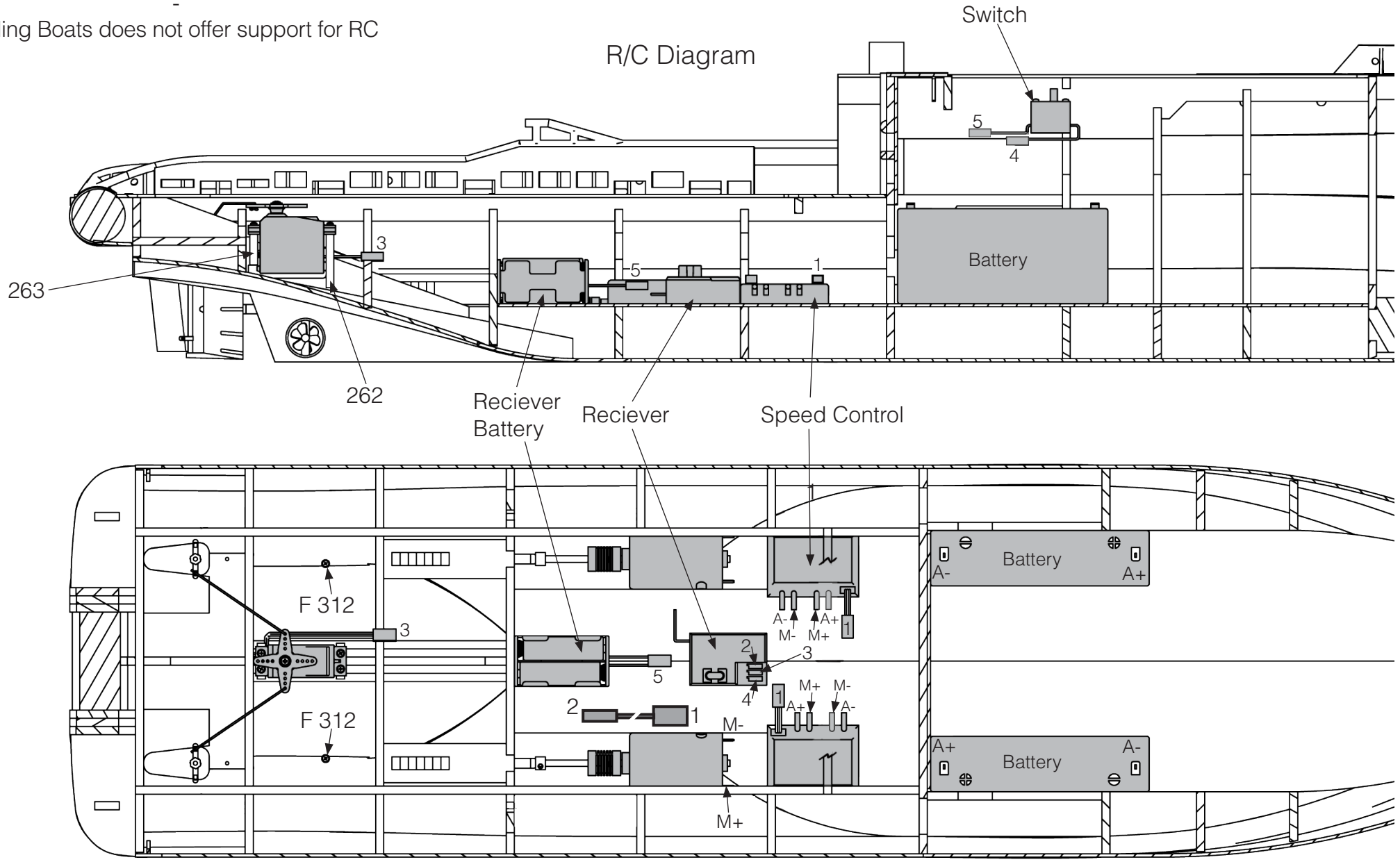

Fig. 21

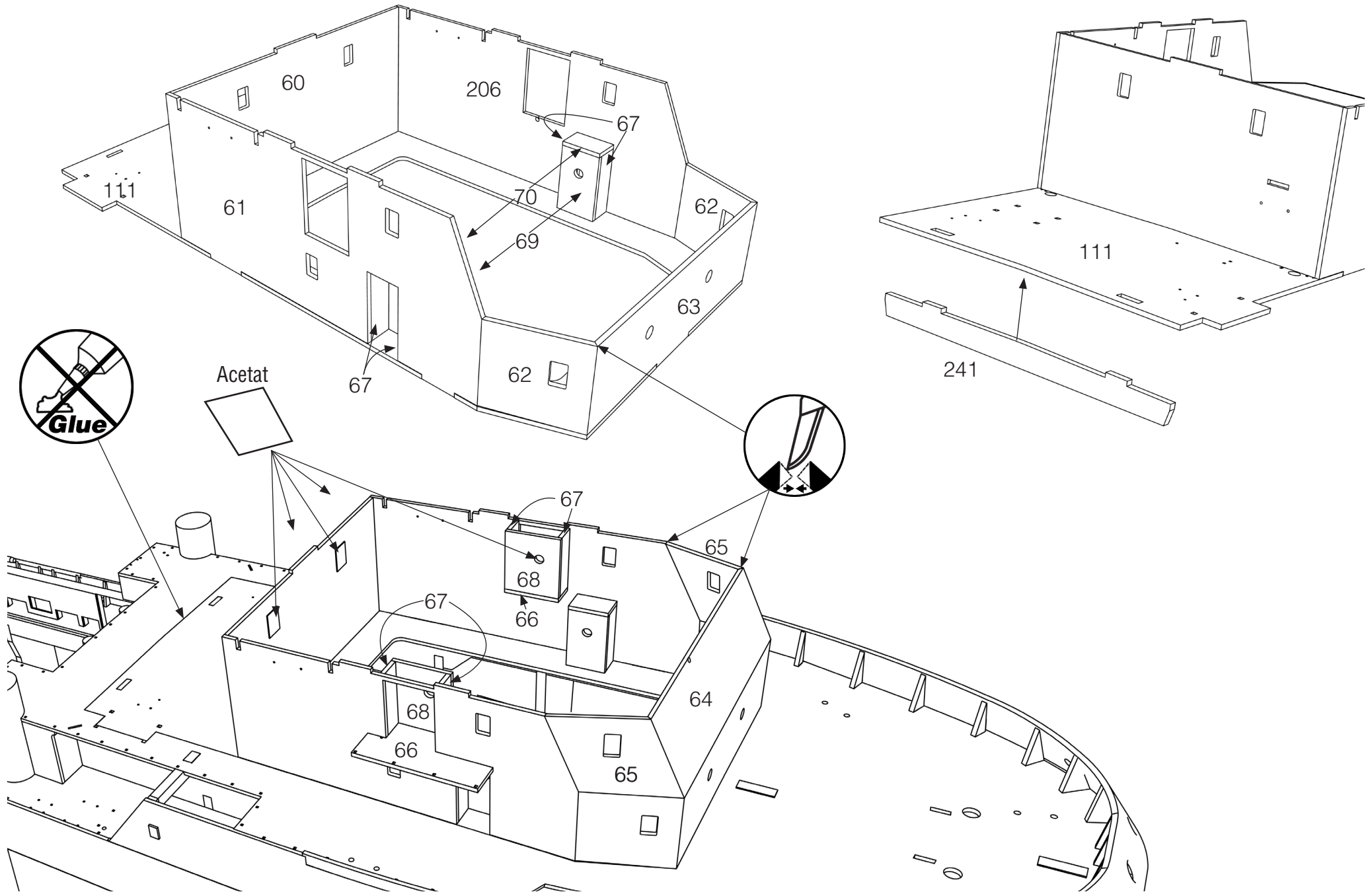
60
206
67
111
61
70
62
69
63
67
62
111
241
Acetat
Glue
67
65
68
67
66
64
68
66
65

Fig. 22

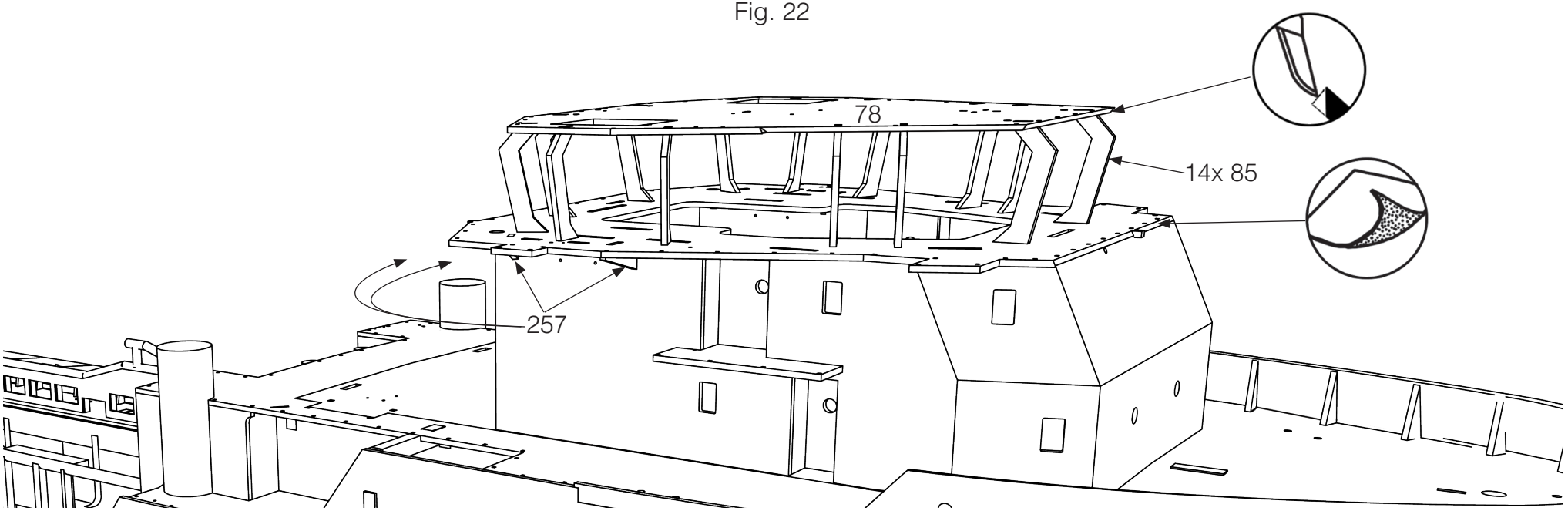


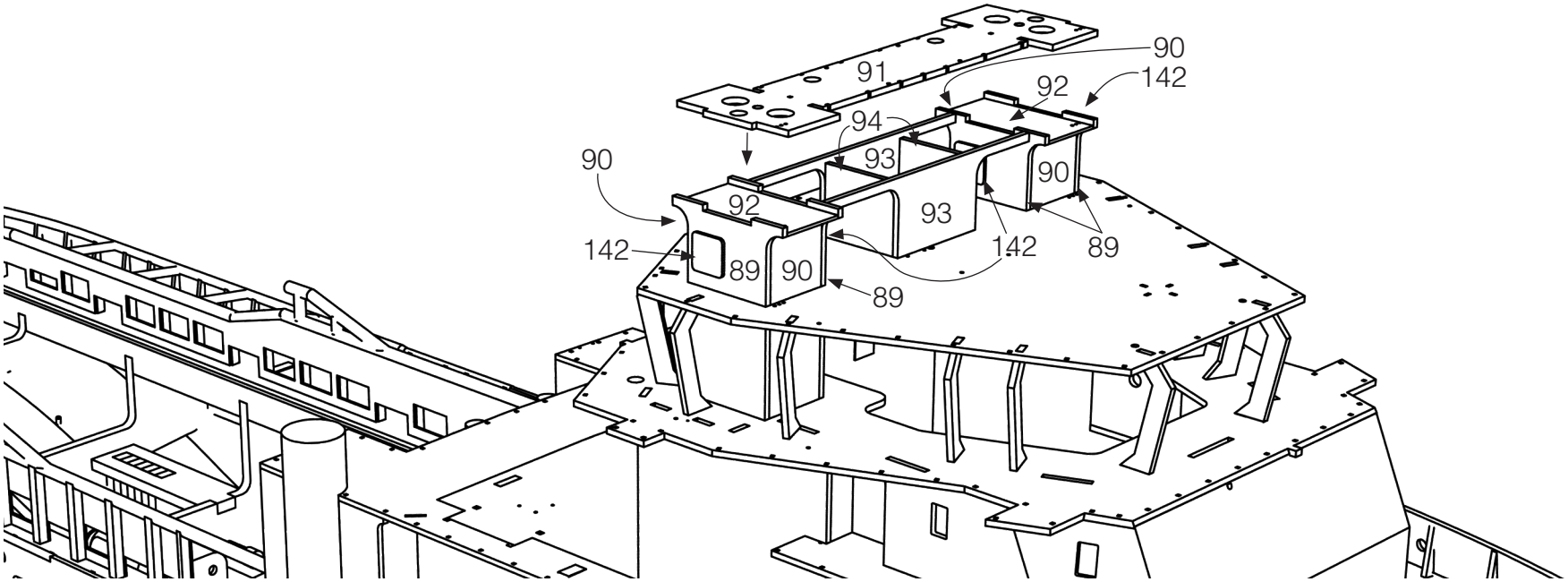

Fig. 23

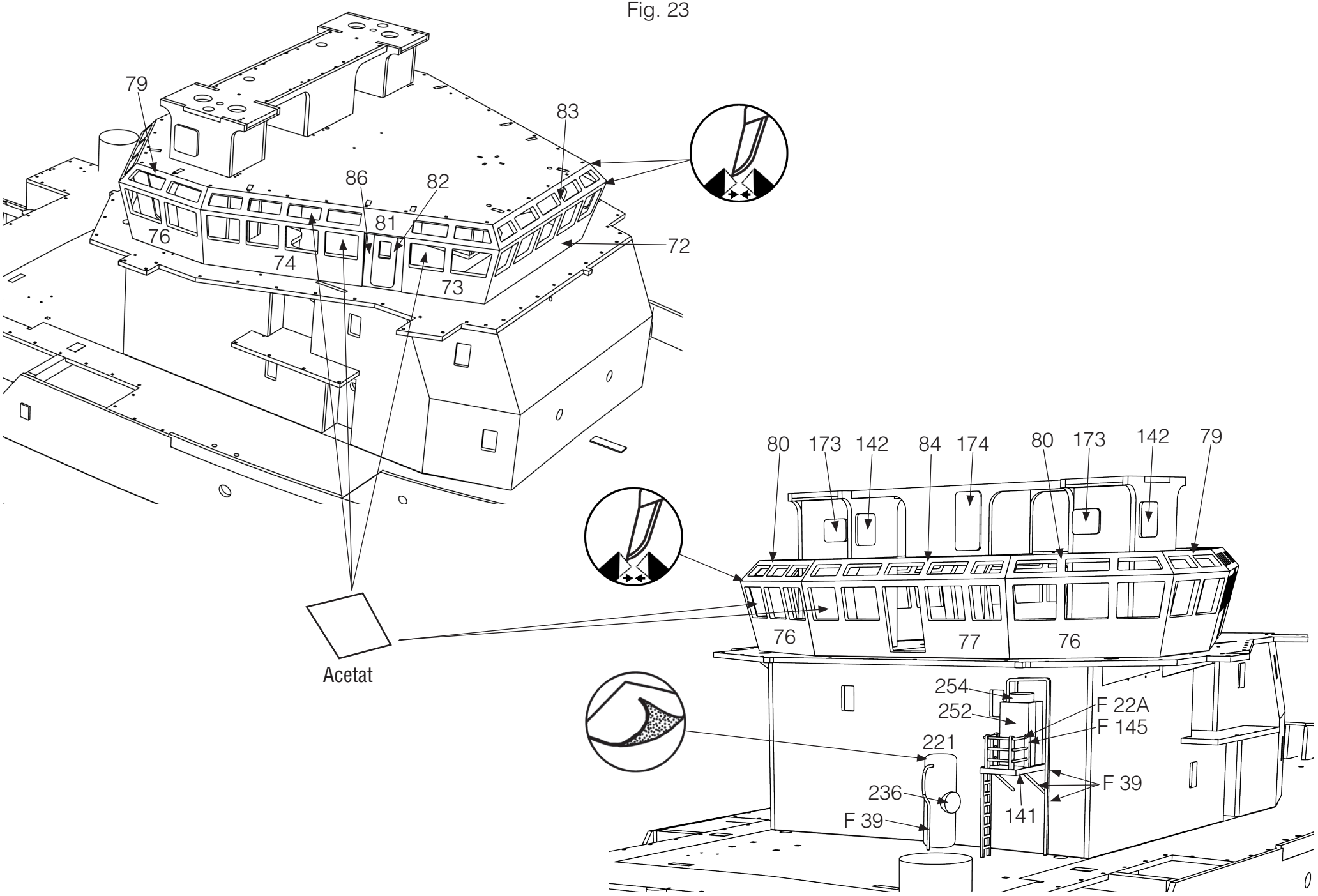
79
83
86
82
81
76
74
73
72
Acetat
80
173
142
84
174
80
173
142
79
76
77
76
254
252
F 22A
F 145
221
F 39
236
141
F 39

Fig. 24

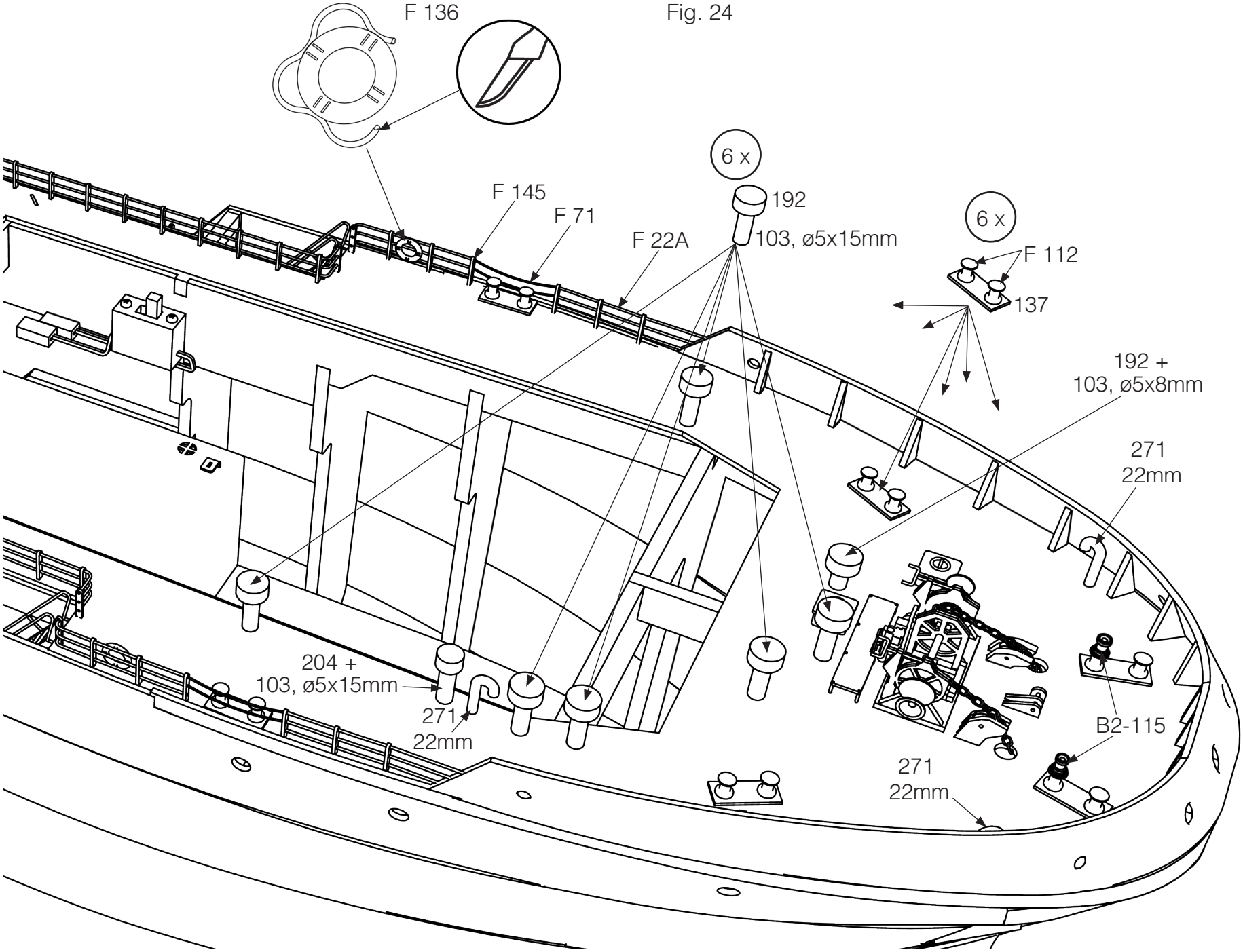
F 136
6 x
192
103, ø5x15mm
F 145
F 71
F 22A
6 x
F 112
137
192 +
103, ø5x8mm
271
22mm
204 +
103, ø5x15mm
271
22mm
B2-115
271
22mm

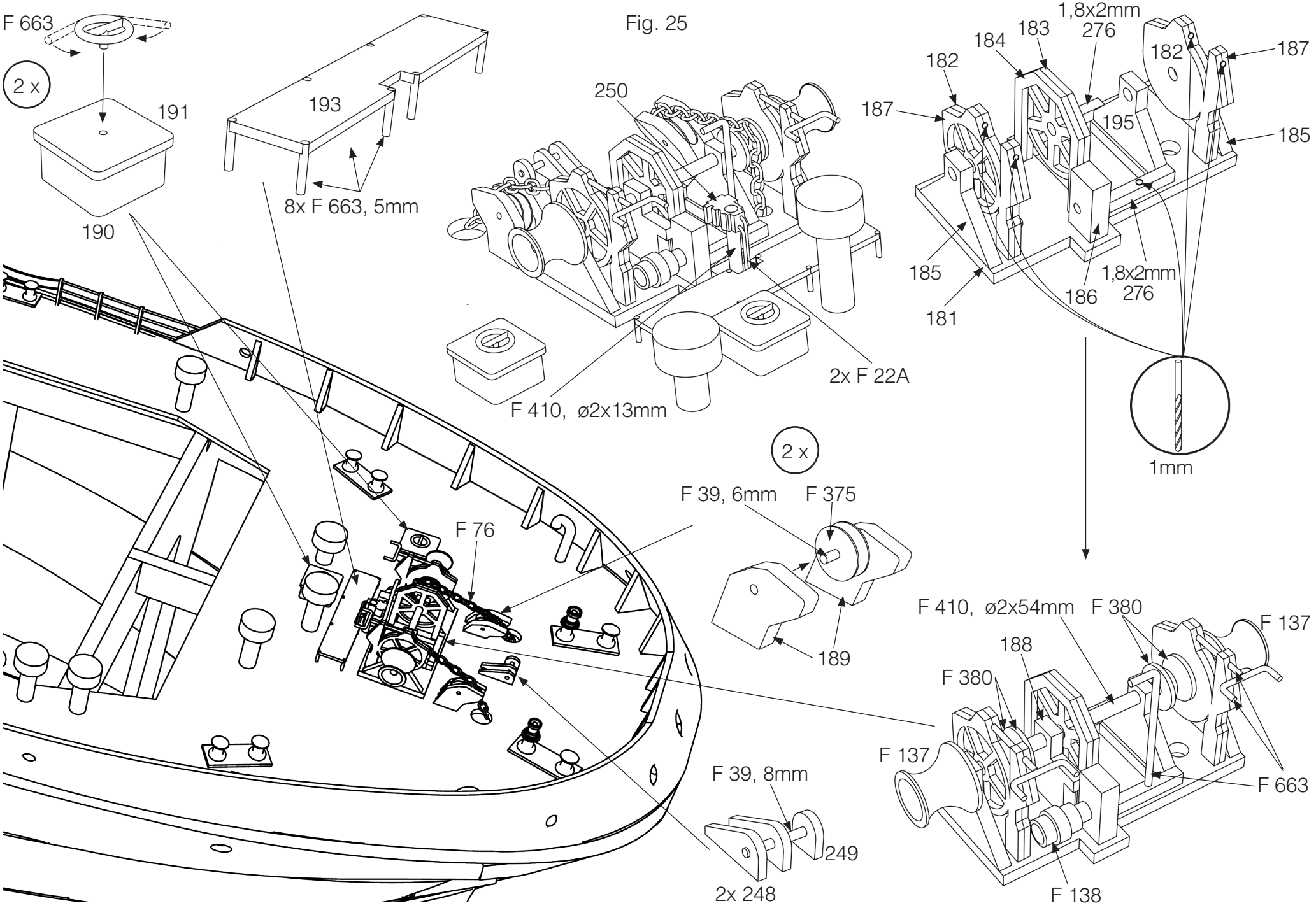
Fig. 25
F 663
2 x
191
190
193
8x F 663, 5mm
250
2x F 22A
F 410, ø2x13mm
1,8x2mm
276
184
183
182
187
195
185
186
181
1mm
F 76
2 x
F 39, 6mm
F 375
189
F 410, ø2x54mm
F 380
F 137
188
F 663
F 138
F 39, 8mm
249
2x 248

Fig. 26

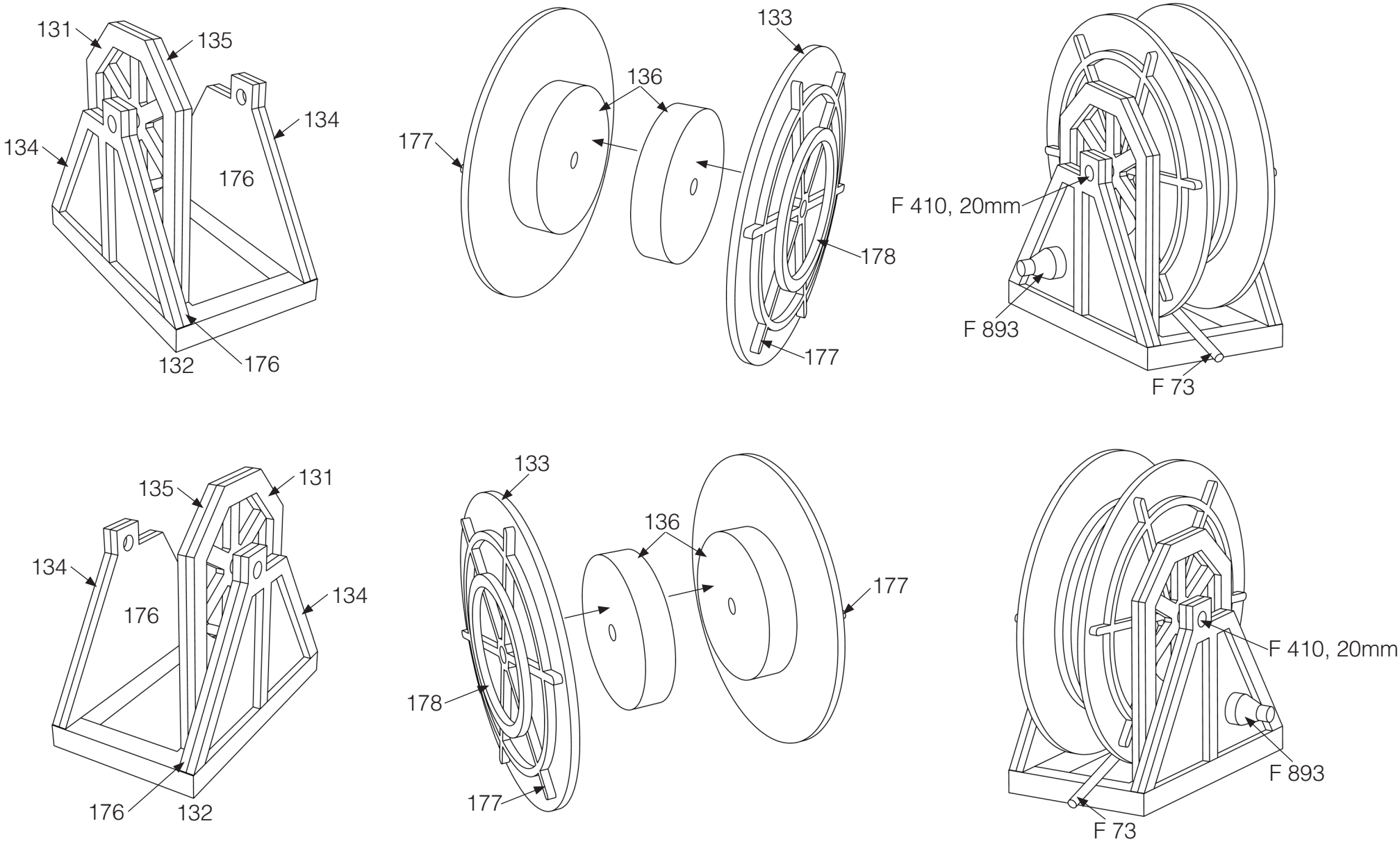
131
135
134
134
176
132
176
133
136
177
178
177
F 410, 20mm
F 893
F 73
135
131
134
134
176
176
132
133
136
177
178
177
F 410, 20mm
F 893
F 73

Fig. 27

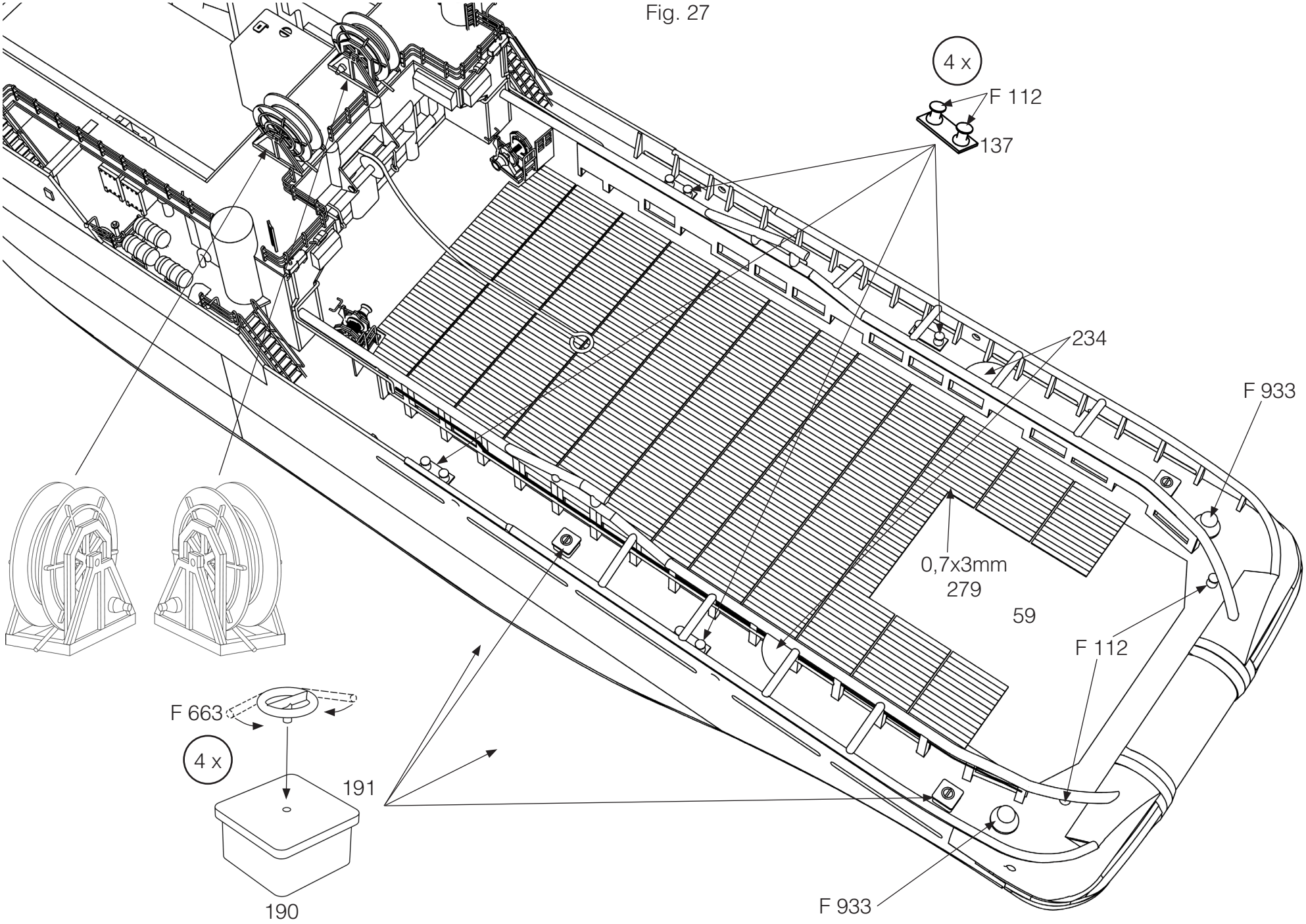

Fig. 28

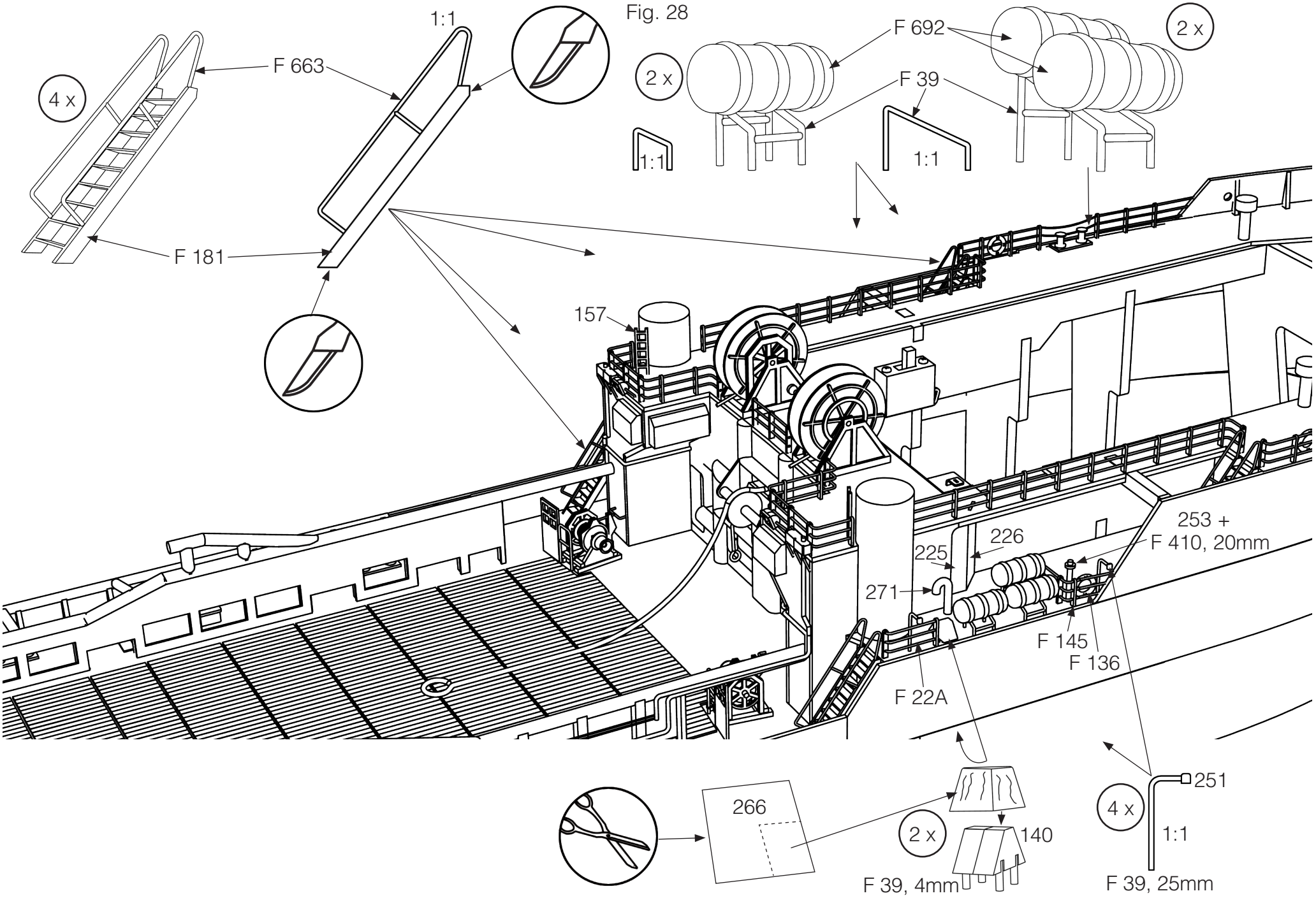
1:1
F 663
4 x
F 181
157
F 692
2 x
2 x
F 39
1:1
1:1
253 +
F 410, 20mm
226
225
271
F 145
F 136
F 22A
266
2 x
140
F 39, 4mm
4 x
251
1:1
F 39, 25mm

Fig. 29

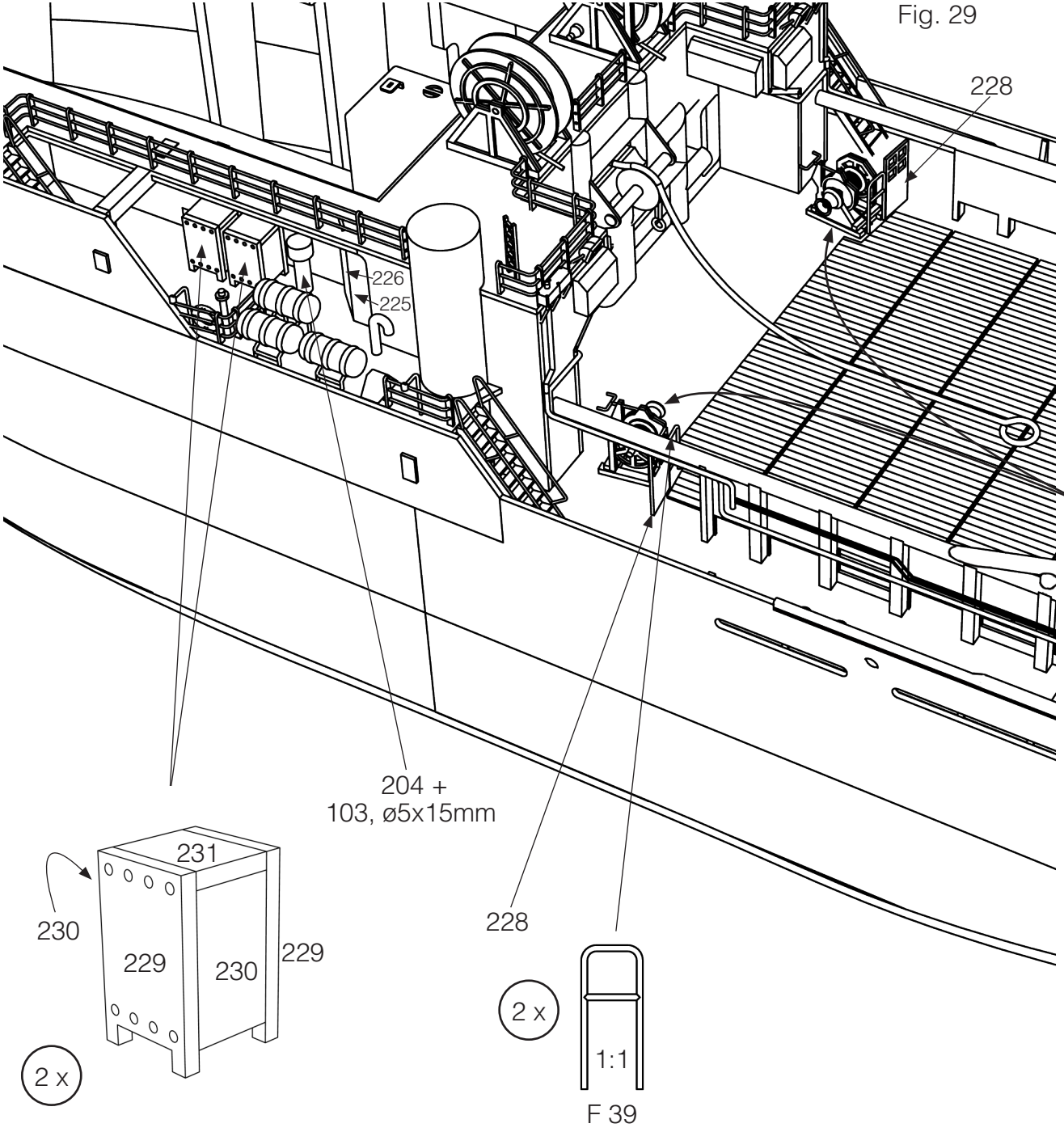
228
226
225
204 +
103, ø5x15mm
231
230
229
230
229
2 x
228
2 x
1:1
F 39

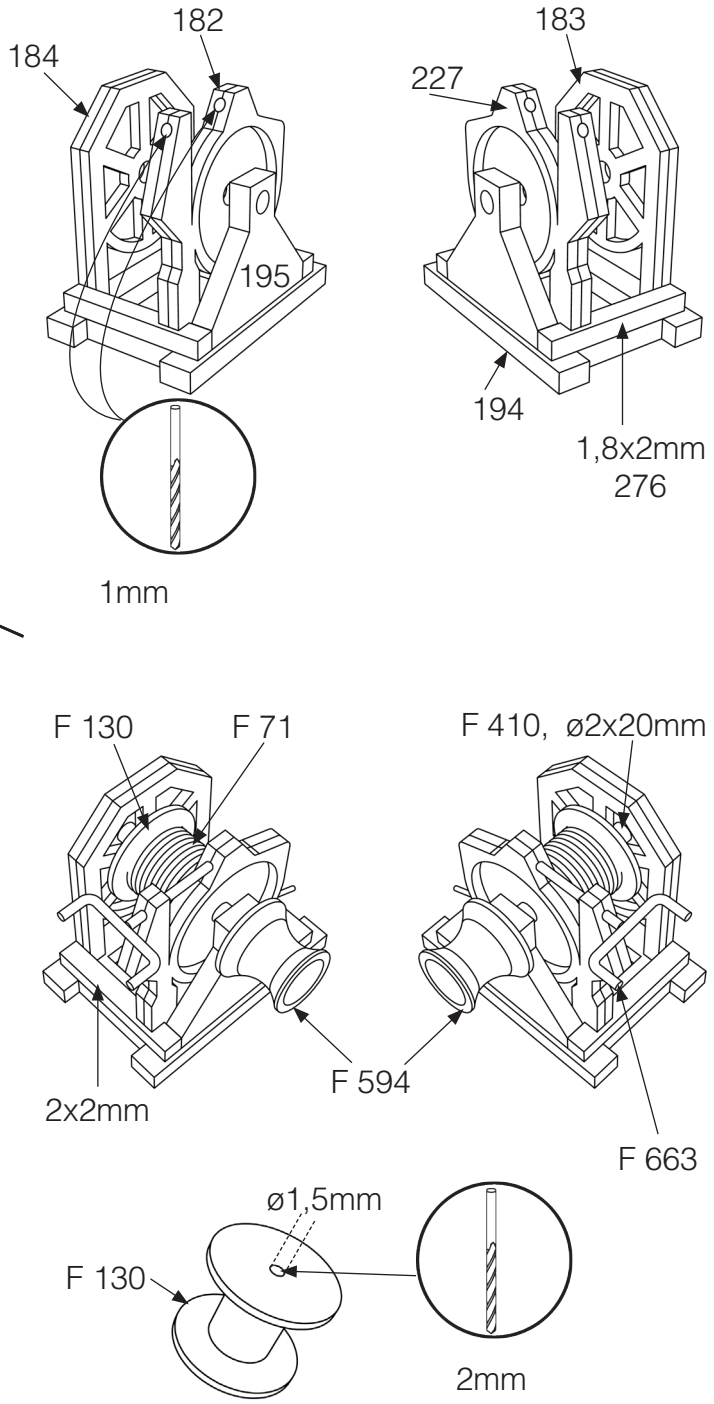
182
184
195
183
227
194
1,8x2mm
276
1mm
F 130
F 71
F 410, ø2x20mm
2x2mm
F 594
F 663
ø1,5mm
F 130
2mm

Fig. 30

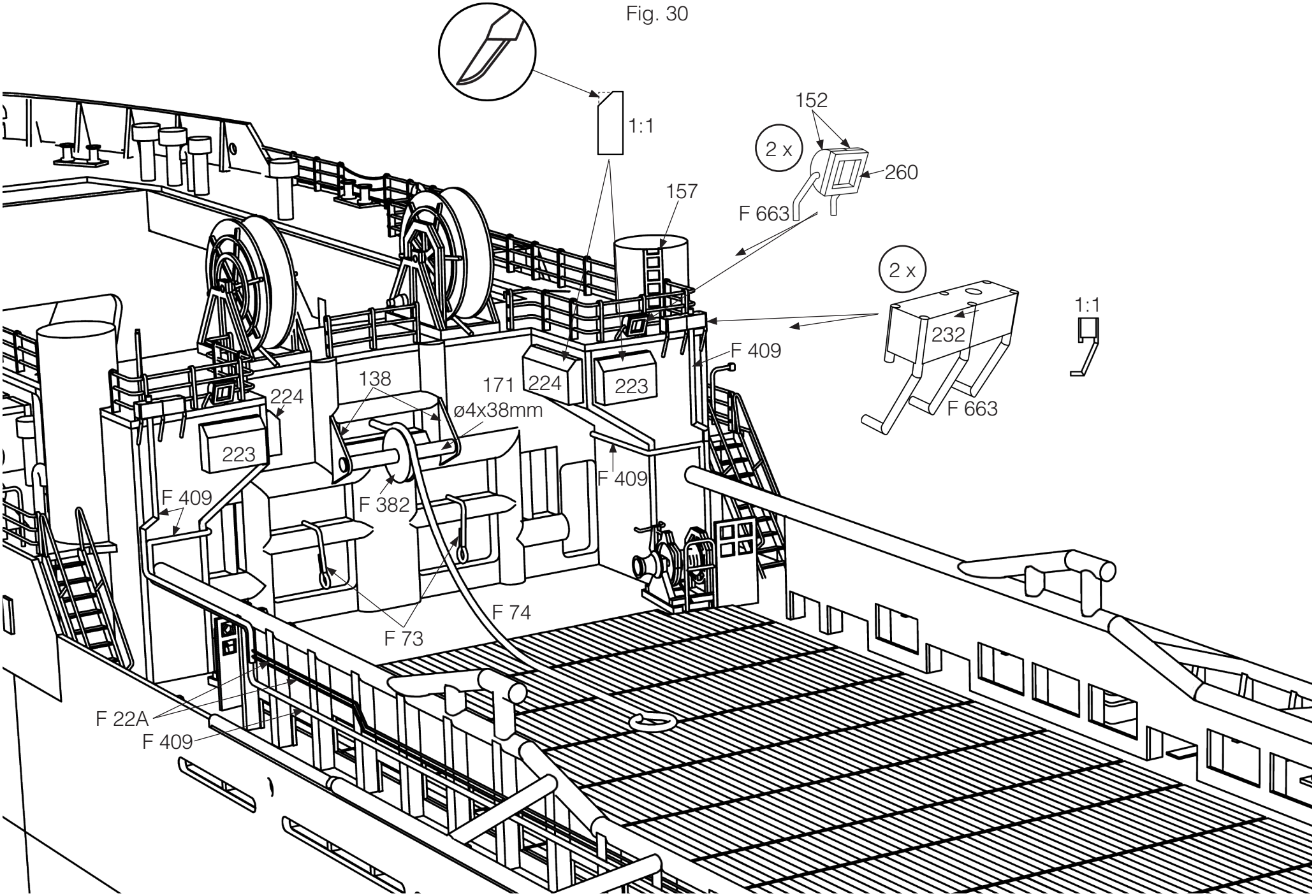
1:1
152
2 x
260
157
F 663
2 x
1:1
232
F 409
F 663
138
171
224
224
223
ø4x38mm
223
F 409
F 409
F 382
F 74
F 73
F 22A
F 409

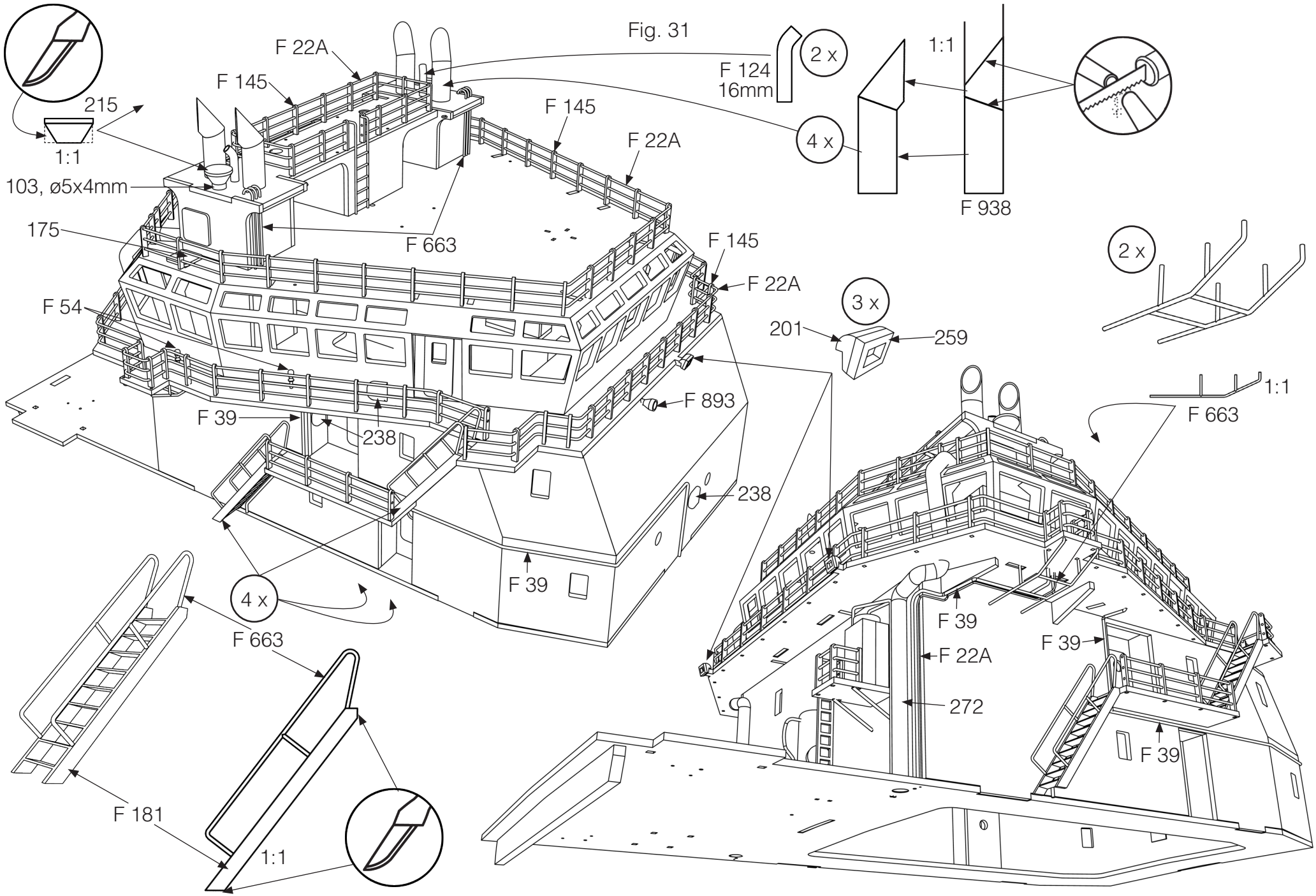
Fig. 31
215
1:1
103, ø5x4mm
175
F 54
F 22A
F 145
F 145
F 22A
F 663
F 145
F 22A
F 893
F 39
238
238
F 39
4 x
F 663
F 181
1:1
F 124
16mm
2 x
4 x
1:1
F 938
2 x
3 x
201
259
1:1
F 663
F 39
F 22A
272
F 39
F 39

Fig. 32

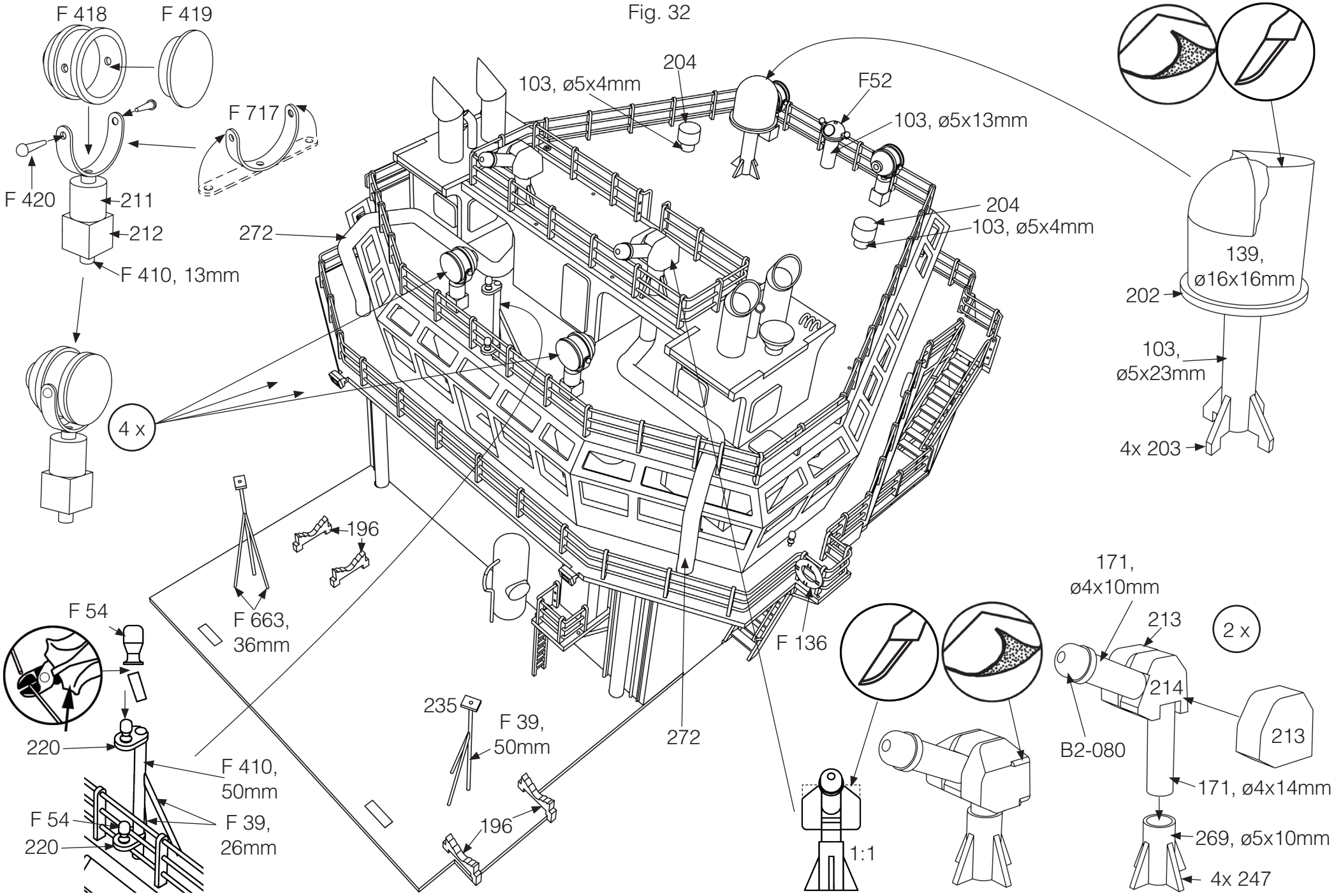
F 418
F 419
F 717
F 420
211
212
F 410, 13mm
4 x
272
103, ø5x4mm
204
F52
103, ø5x13mm
204
103, ø5x4mm
139,
ø16x16mm
202
103,
ø5x23mm
4x 203
196
F 663,
36mm
F 54
220
F 410,
50mm
F 54
220
F 39,
26mm
235
F 39,
50mm
196
272
F 136
1:1
171,
ø4x10mm
213
2 x
214
213
B2-080
171, ø4x14mm
269, ø5x10mm
4x 247

Fig. 33

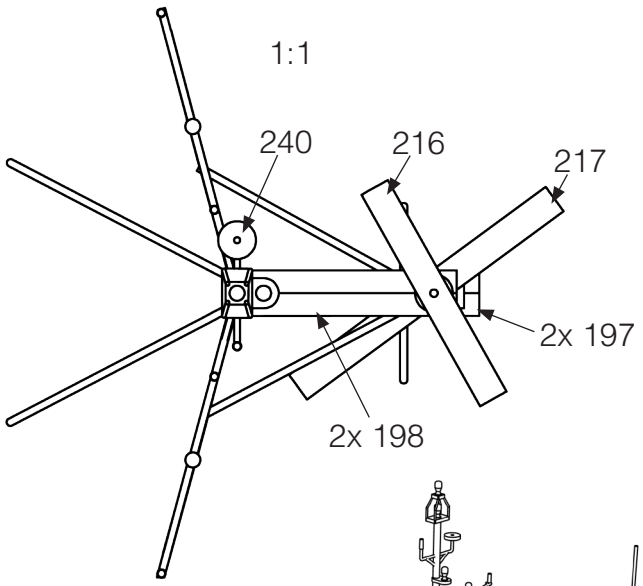
1:1
240
216
217
2x 197
2x 198

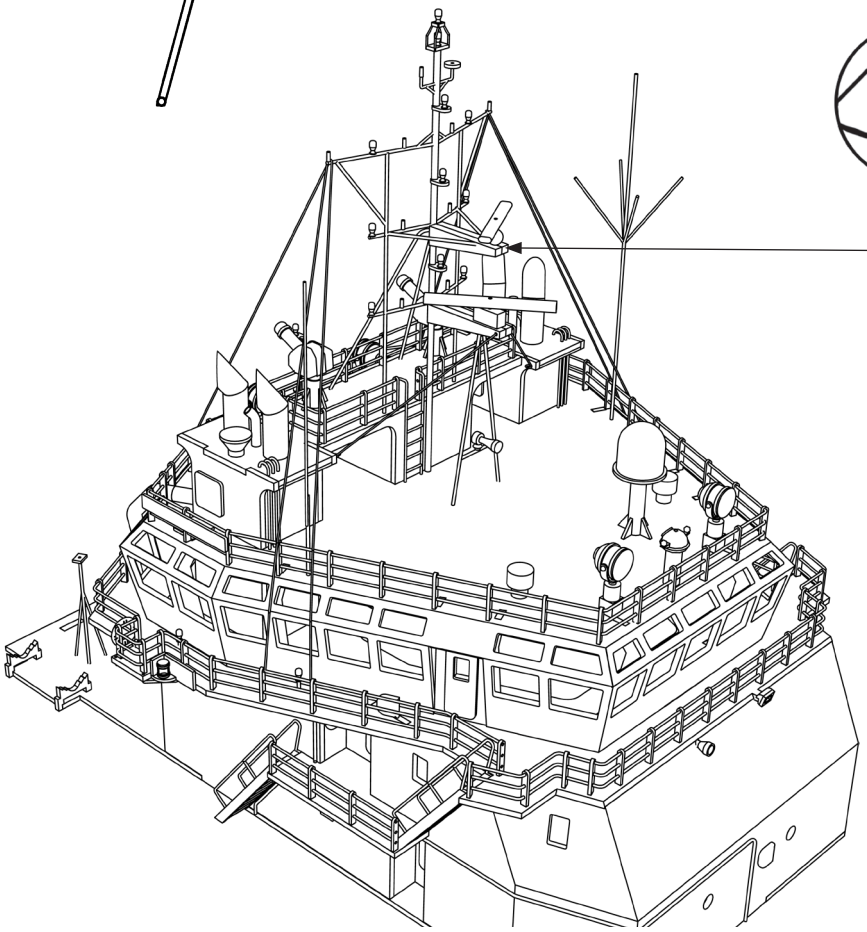

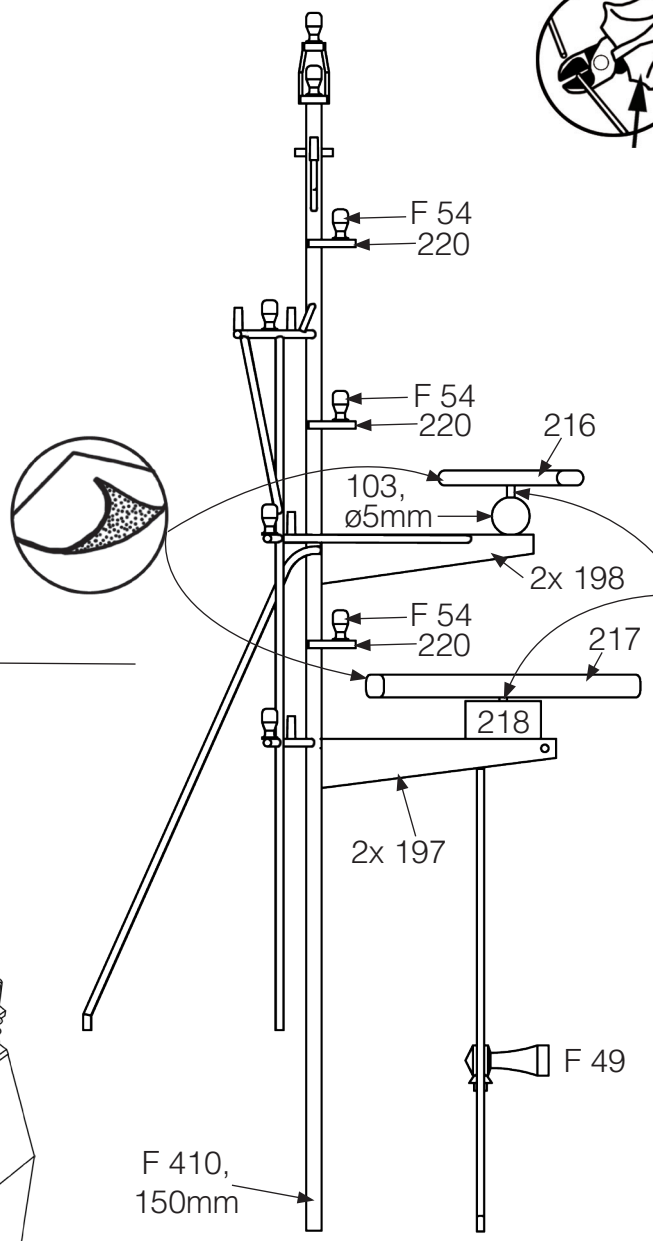
F 54
220
F 54
220
216
103,
ø5mm
2x 198
F 54
220
217
218
2x 197
F 49
F 410,
150mm
1:1

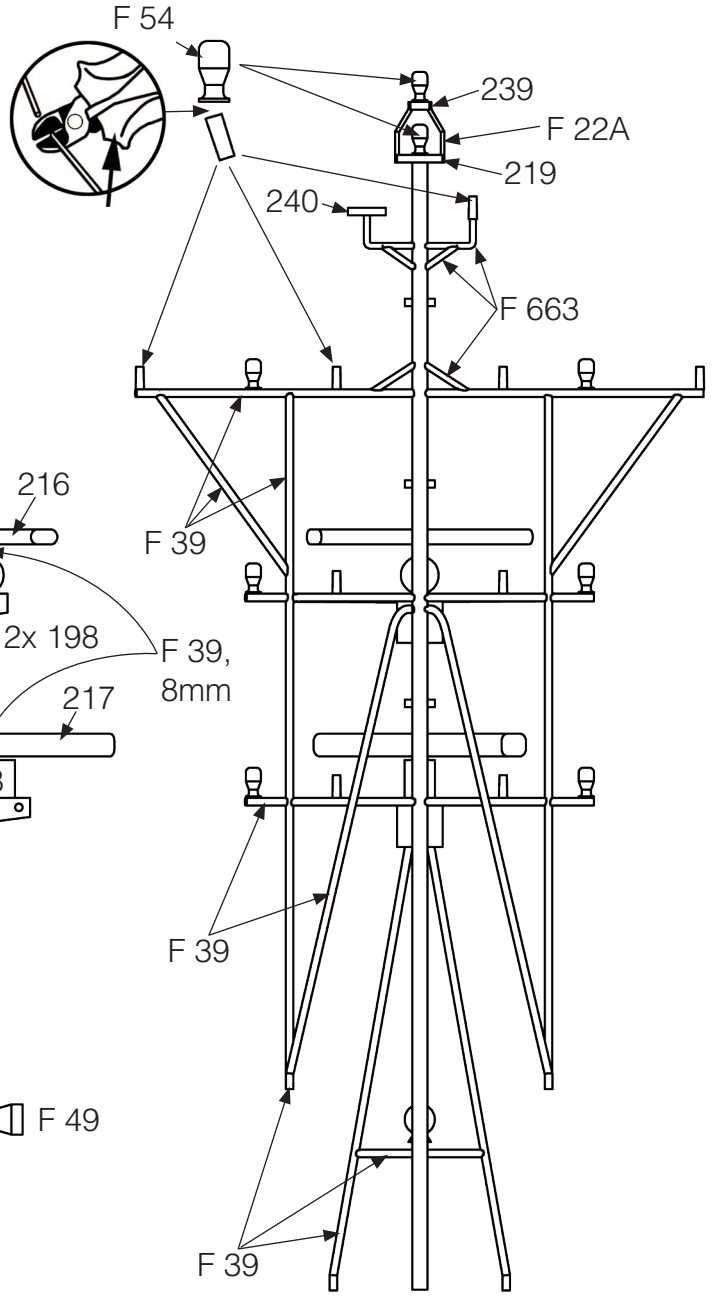
F 54
239
F 22A
219
240
F 663
F 39
F 39,
8mm
F 39
F 39
1:1

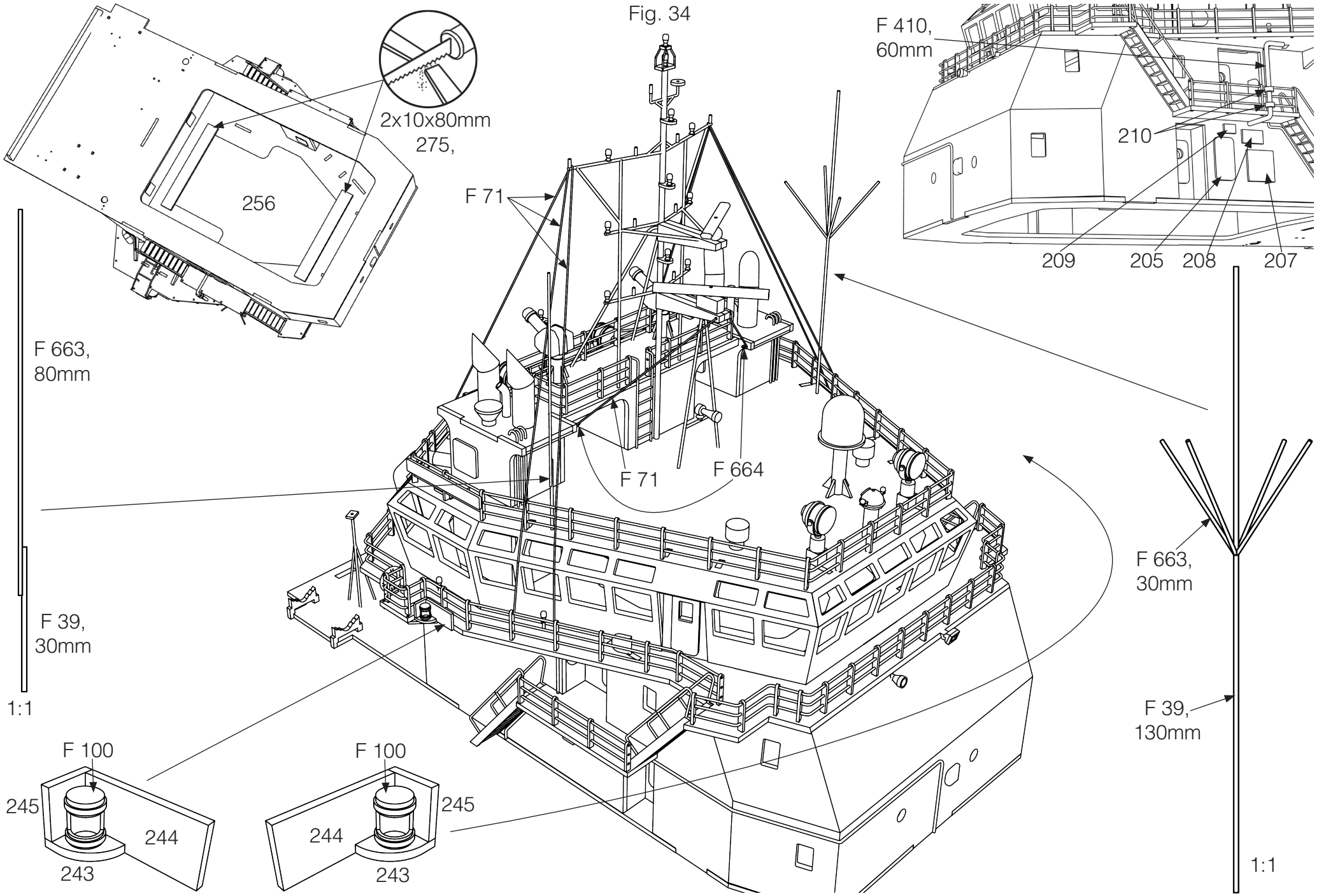
Fig. 34
2x10x80mm
275,
256
F 410,
60mm
210
209
205
208
207
F 71
F 71
F 664
F 663,
80mm
F 39,
30mm
1:1
F 663,
30mm
F 39,
130mm
1:1
F 100
245
244
243
F 100
245
244
243

Fig. 35

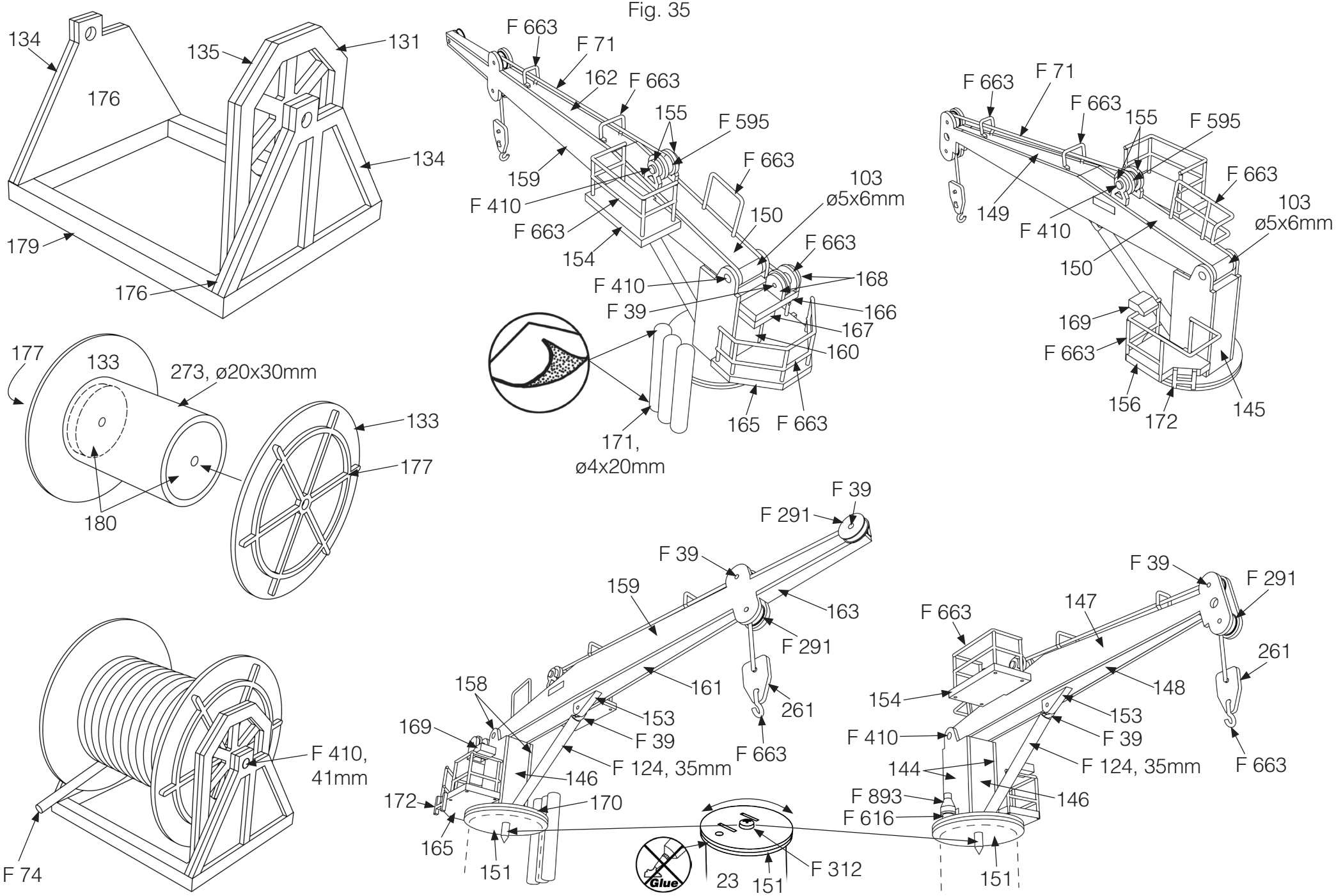
134
135
131
176
134
179
176
177
133
273, ø20x30mm
133
177
180
F 663
F 71
162
F 663
155
F 595
159
F 663
103
ø5x6mm
F 410
150
F 663
154
F 663
168
F 410
F 39
166
167
160
165
F 663
171,
ø4x20mm
F 663
F 71
F 663
155
F 595
F 663
103
ø5x6mm
149
F 410
150
169
F 663
156
172
145
F 74
F 410,
41mm
F 39
F 291
F 39
159
163
F 291
158
161
261
169
153
F 39
F 663
F 124, 35mm
146
172
170
165
151
23
151
F 312
F 39
F 291
F 663
147
261
154
148
153
F 410
F 39
144
F 124, 35mm
F 663
F 893
146
F 616
151
Glue

Fig. 36

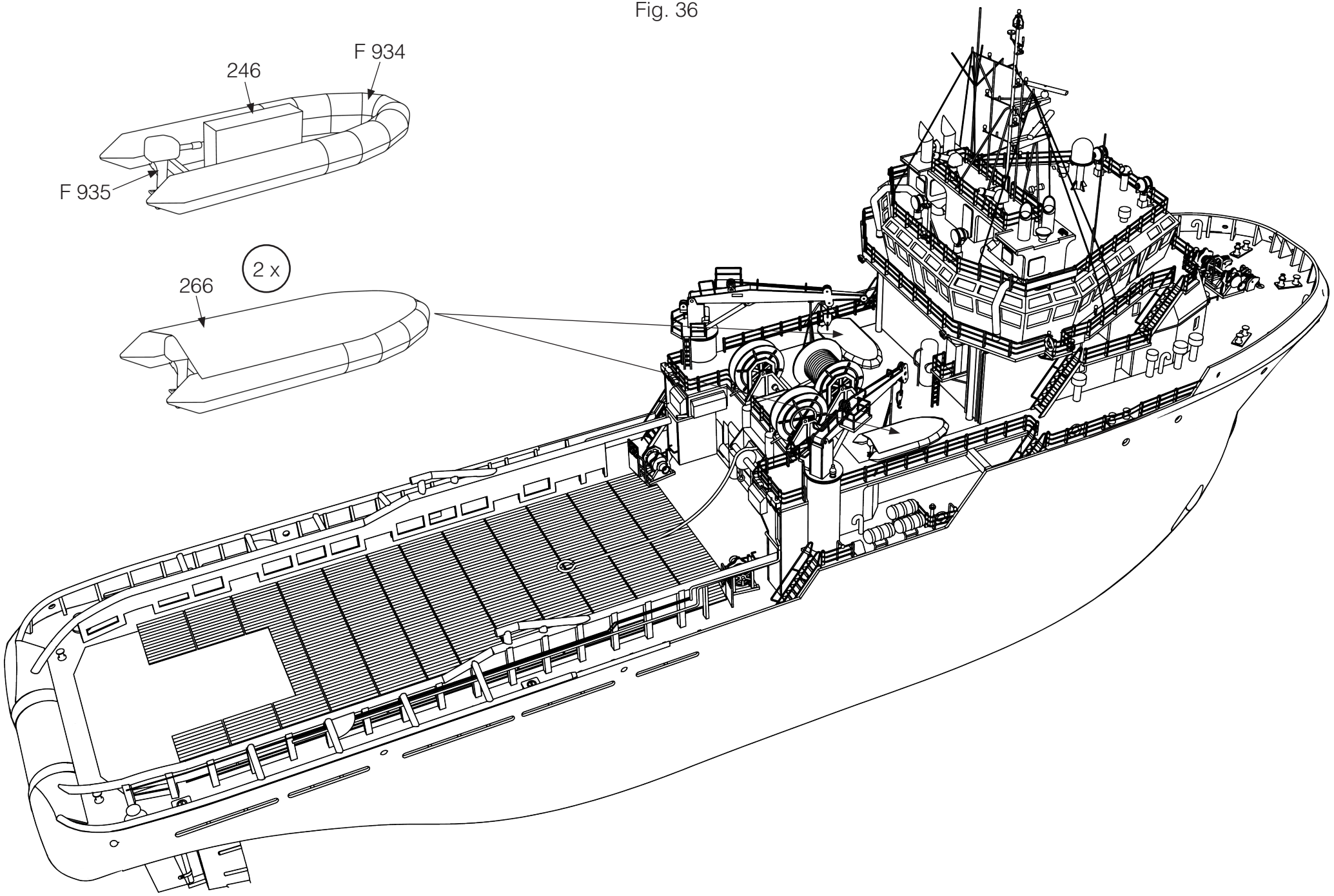

| | | | |
|---|---|---|---|
| Symboler |  | = | Rigningsnummer |
| |  | = | Farvenummer |
| |  | = | Bejdse |
| Symbols |  | = | Rigging No. |
| |  | = | Colour No. |
| |  | = | Stain |
| Zeichen |  | = | Takel Nr. |
| |  | = | Farben Nr. |
| |  | = | Beize |
| Symboles |  | = | Greement no. |
| |  | = | Couleur no. |
| |  | = | Mordant |
| Symbolen |  | = | Tuigage Nr. |
| |  | = | Kleur Nr. |
| |  | = | Beits |
| Símbolo |  | = | Oparejo Nr. |
| |  | = | Color Nr. |
| |  | = | Mordiente |
| Segno |  | = | Attrezzatura Nº |
| |  | = | Colore Nº |
| |  | = | Inchiostro tint. |
| Simbolos |  | = | Cordame nº |
| |  | = | Cõr nº |
| |  | = | Tintura |

Til denne model er mahogni bejdse og farver med følgende numre nødvendige:
For this model is mahogany stain and colours with the following numbers should be used:
Für dieses Modell sind Mahagoni Beize und Farben mit den folgenden Nummern notwendig:
Pour ce modèle, le mordant et les couleurs avec les numéros suivants doivent être employées:
Voor dit model zijn kleuren met de volgende nummers nodig:
Para est modelo se necesitan mordiente et colores con los siguientes nùmeros:
Per questo modello occorrono inchiostro tinteggiatore ”mogano” e colori con questi numeri:
Pinte o modelo com tintura cõr Mogno e as cõres sugeridas da Billing Boats:

| | | | |
|---|---|---|---|
| Billing | 1 | = | White |
| Billing | 3 | = | Emerald |
| Billing | 4 | = | Orange |
| Billing | 5 | = | Tan |
| Billing | 6 | = | Hull Red |
| Billing | 10 | = | Matt Lemon |
| Billing | 11 | = | Black |
| Billing | 12 | = | Pale Grey |
| Billing | 15 | = | Silver |
| Billing | 35 | = | Signal Red |
| Billing | 36 | = | Bejdse/Stain/Beize/Mordant/Beize/Mordient |
| Billing | 38 | = | Cobalt Blue |