SPARK XB6

# CENTER GEARBOX

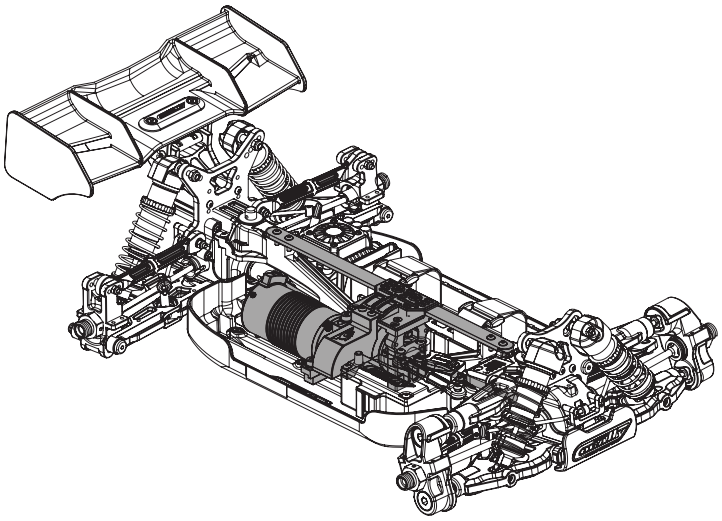

**Required Tools:**

- 2.0 Hex Driver
- 2.5 Hex Driver
- 3.0 Hex Driver
- Thread-locker

## STEP 1

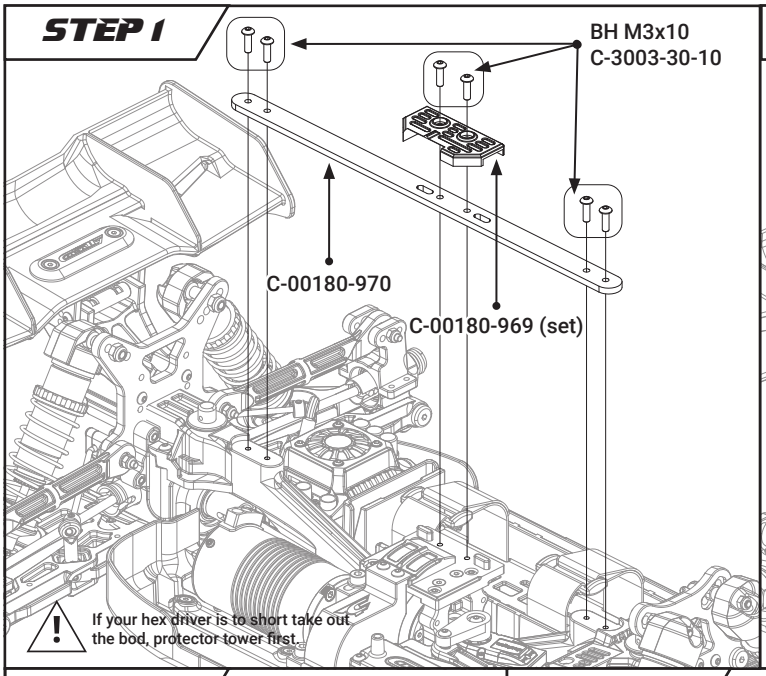


If your hex driver is to short take out the bod, protector tower first.

## STEP 2

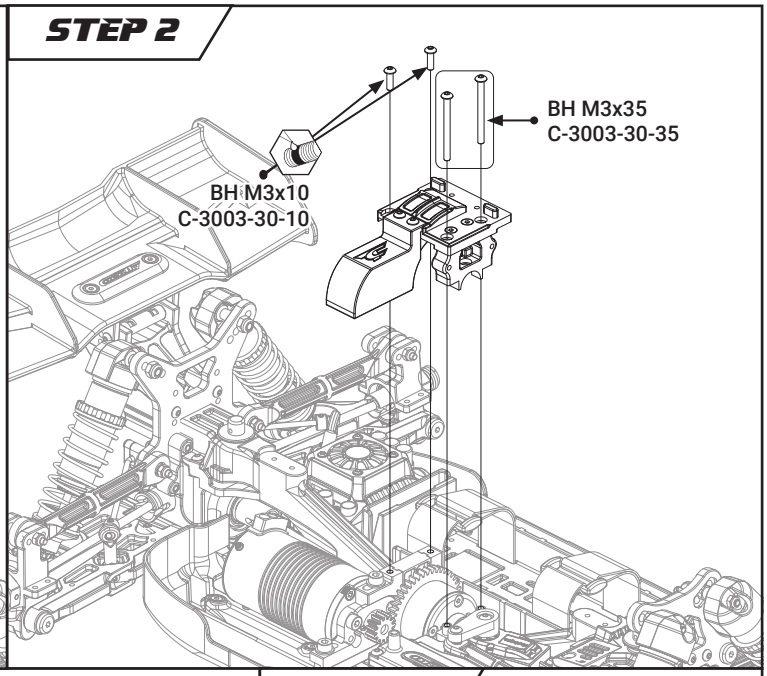


## STEP 3

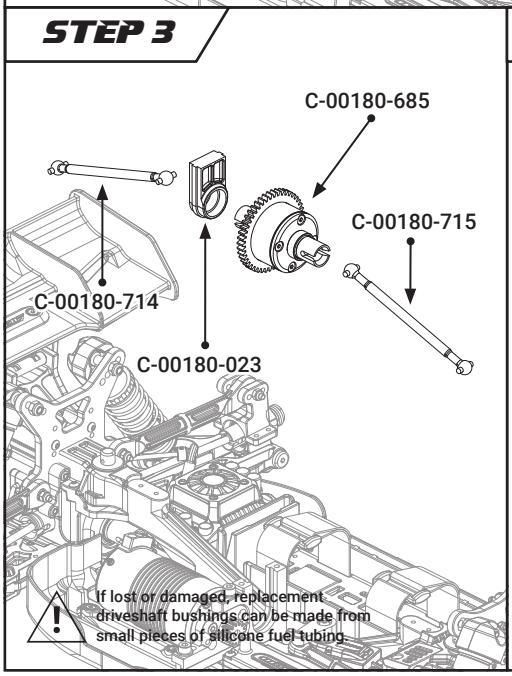


If lost or damaged, replacement driveshaft bushings can be made from small pieces of silicone fuel tubing.

## STEP 4

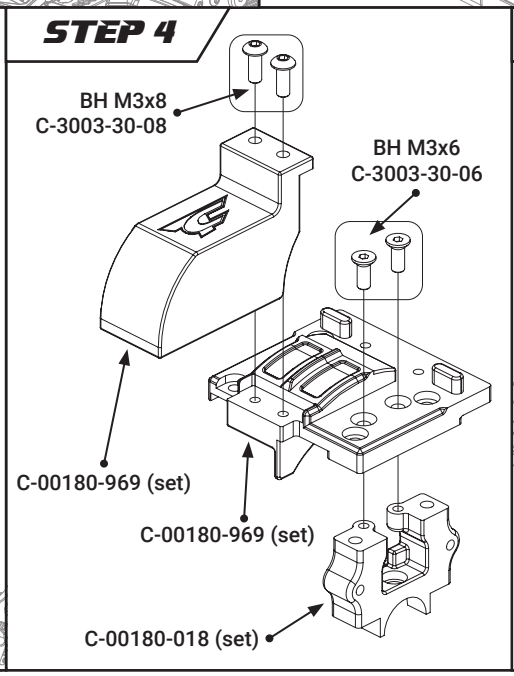

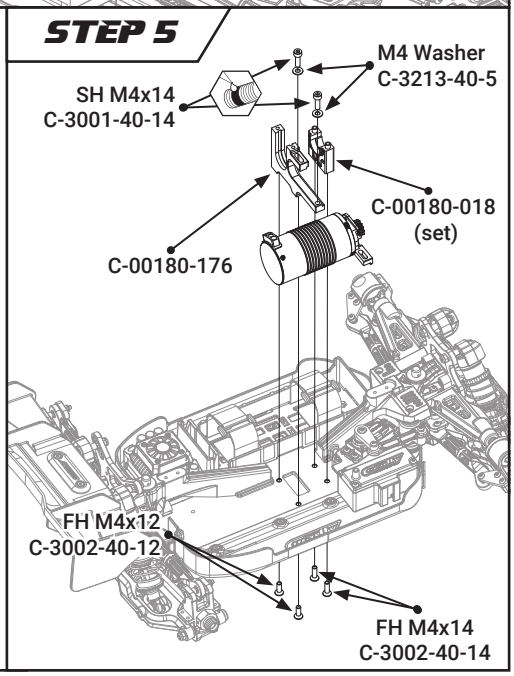
## STEP 5