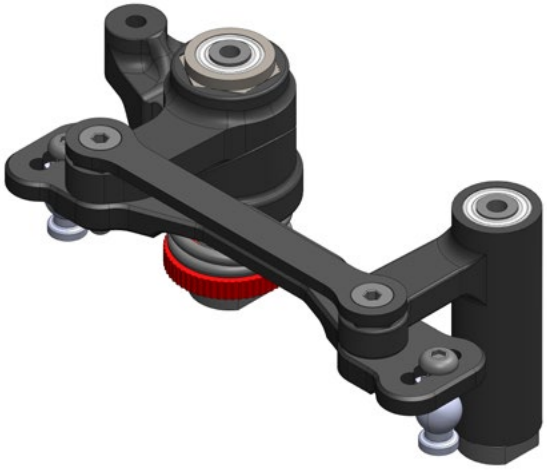

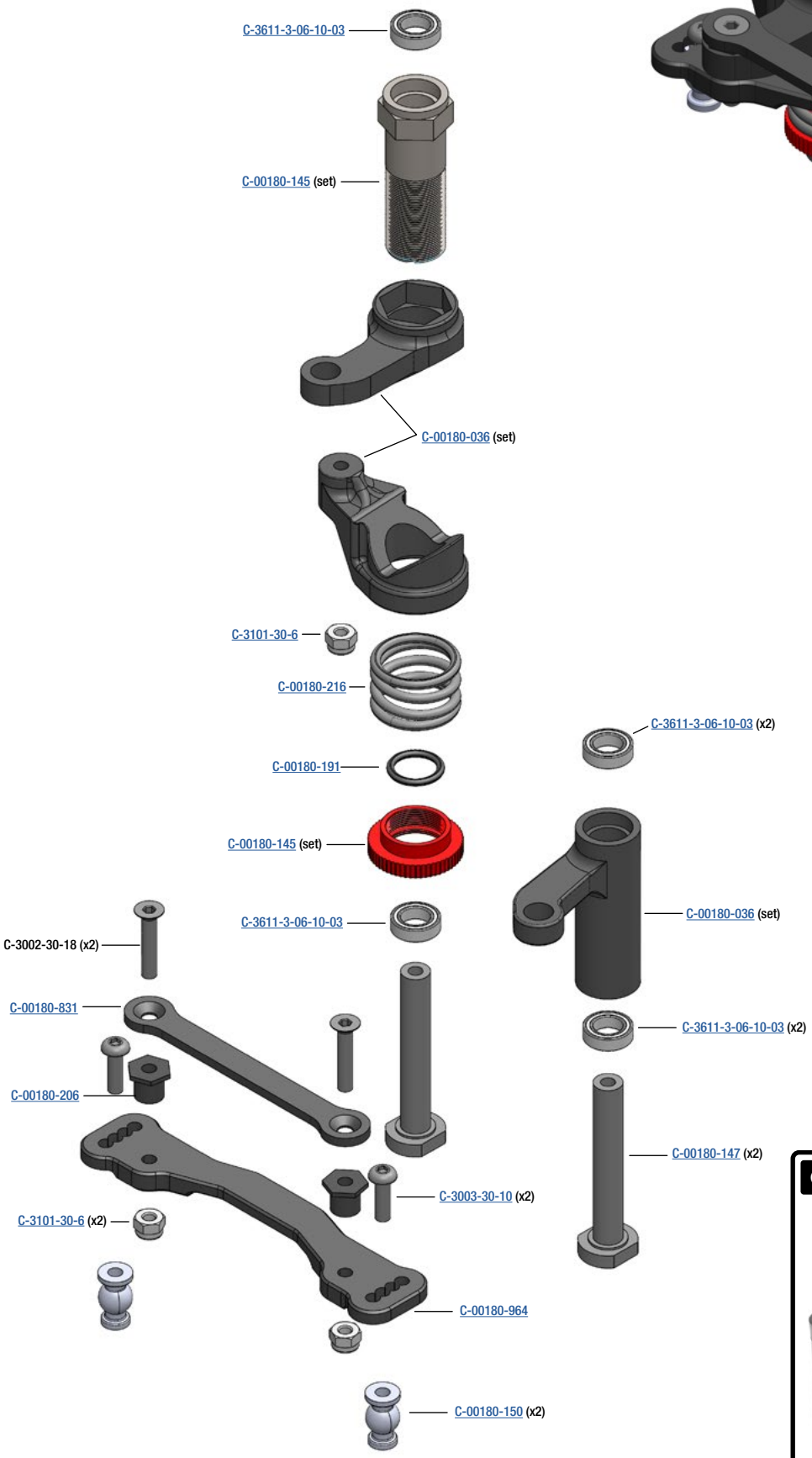

OPTION

C-00180-266
Servo Saver Steering Arm - 7075 T6 - Hard Anodised - Black - 1 pc