Drawn by:	8047	**Billing Boats Denmark Aps**	
Date:			
Scale: 1:65	**Bluenose „576„** *General Drawing 1*	Drawing no.	50-50034

S1	F70	**R1**	F72	**L1**	F71
S2	F70	**R2**	F72	**L2**	F71
S3	F70	**R3**	F72	**L3**	F71
S4	F70	**R4**	F72	**L4**	F71
S5	F70	**R5**	F71	**L5**	F71
S5a	F70	**R6**	F72	**L6**	F71
S6	F70	**R7**	F71	**L7**	F71
S7	F70	**R8**	F72	**L8**	F71
S8	F70	**R9**	F72	**L9**	F72
S9	F70	**R10**	F72	**L10**	F71
S10	F70	**R11**	F71	**L11**	F71
S11	F70	**R12**	F72		
S12	F70	**R13**	F71		
S13	F70				
S14	F70				
S15	F70				
S16	F70				
S17	F70				

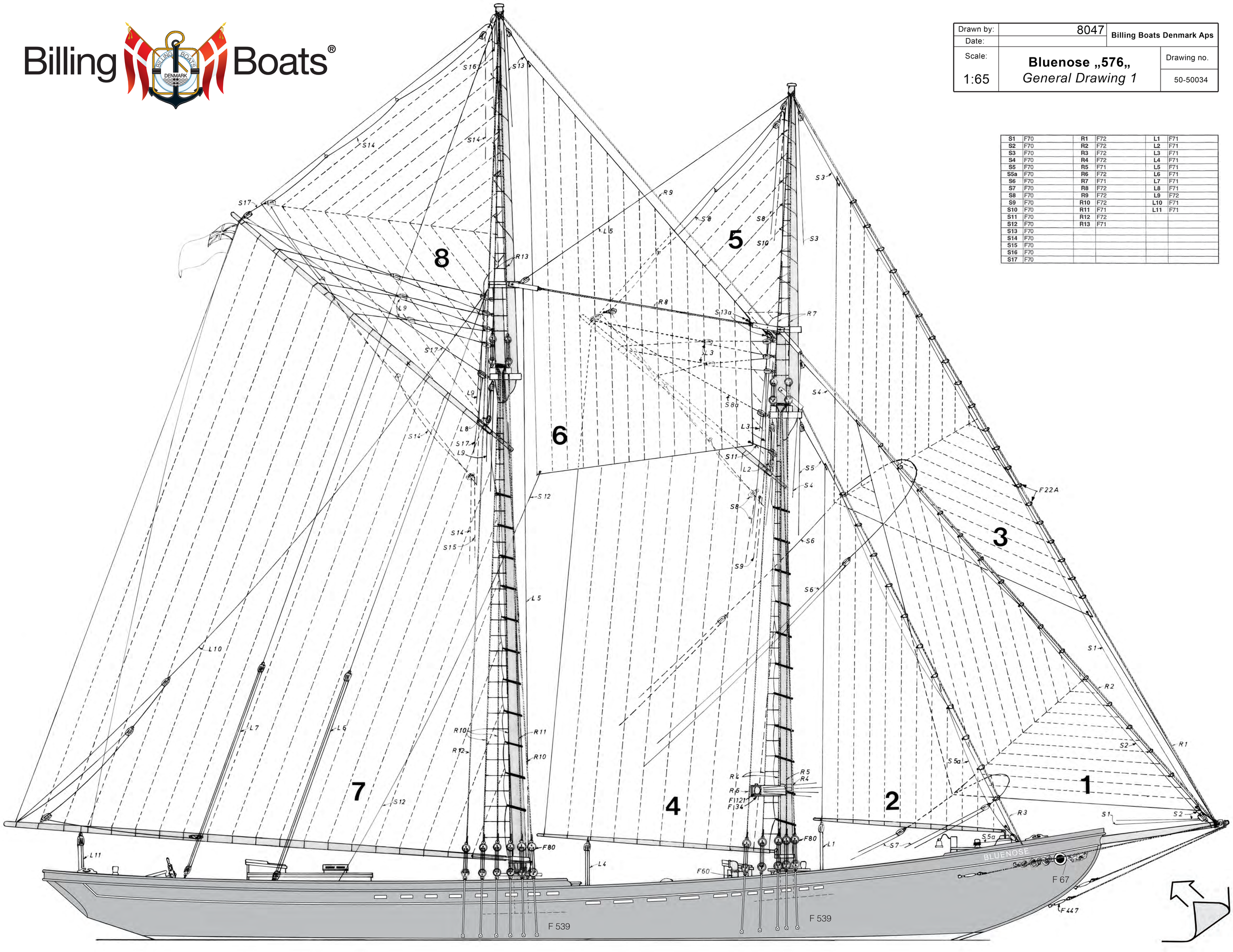

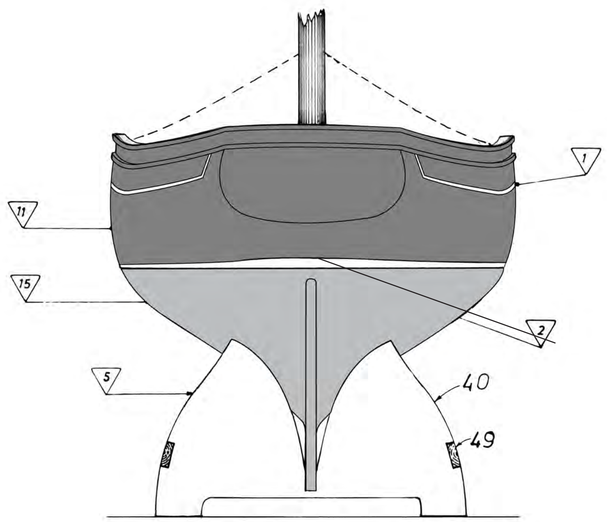

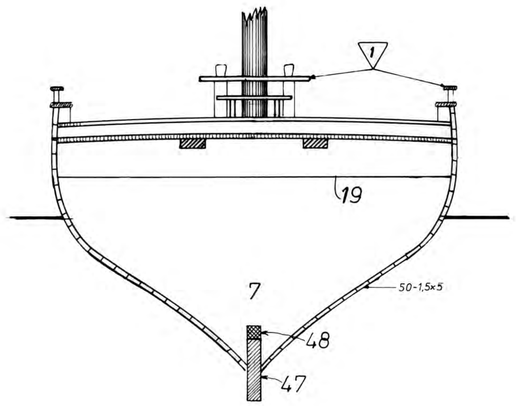

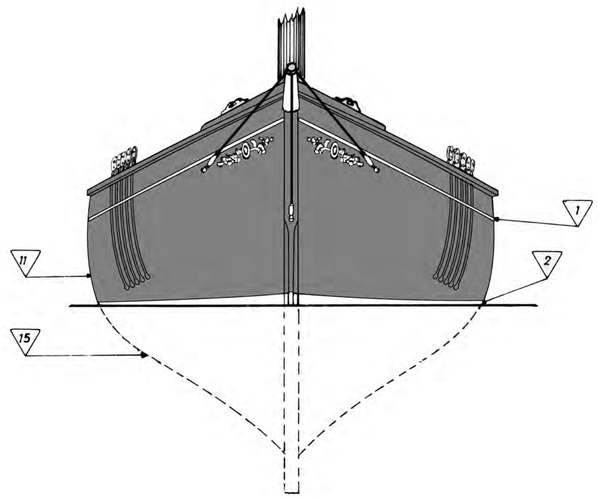

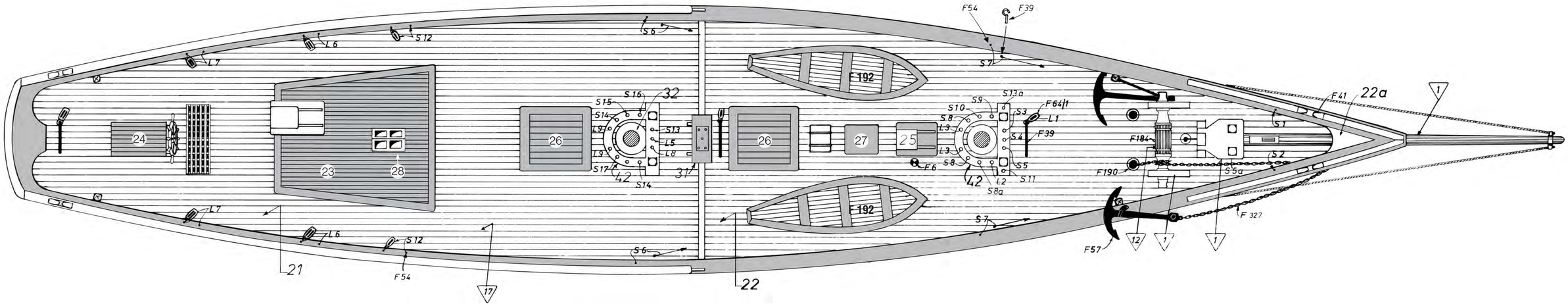

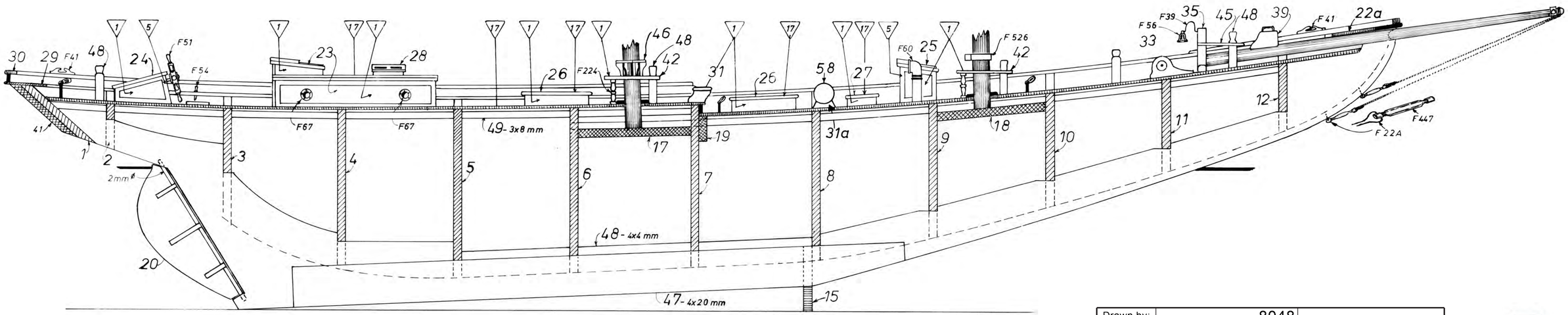

Drawn by:	8048	Billing Boats Denmark Aps	
Date:			
Scale: 1:65	Bluenose „576„ *General Drawing 2*		Drawing no. 50-50034