Danmark ”5005” ***

BUILDING INSTRUCTION

This model is Copyright protected
All Copyrights to the designs of
this version of Danmark belongs
to Billing Boats Denmark Aps

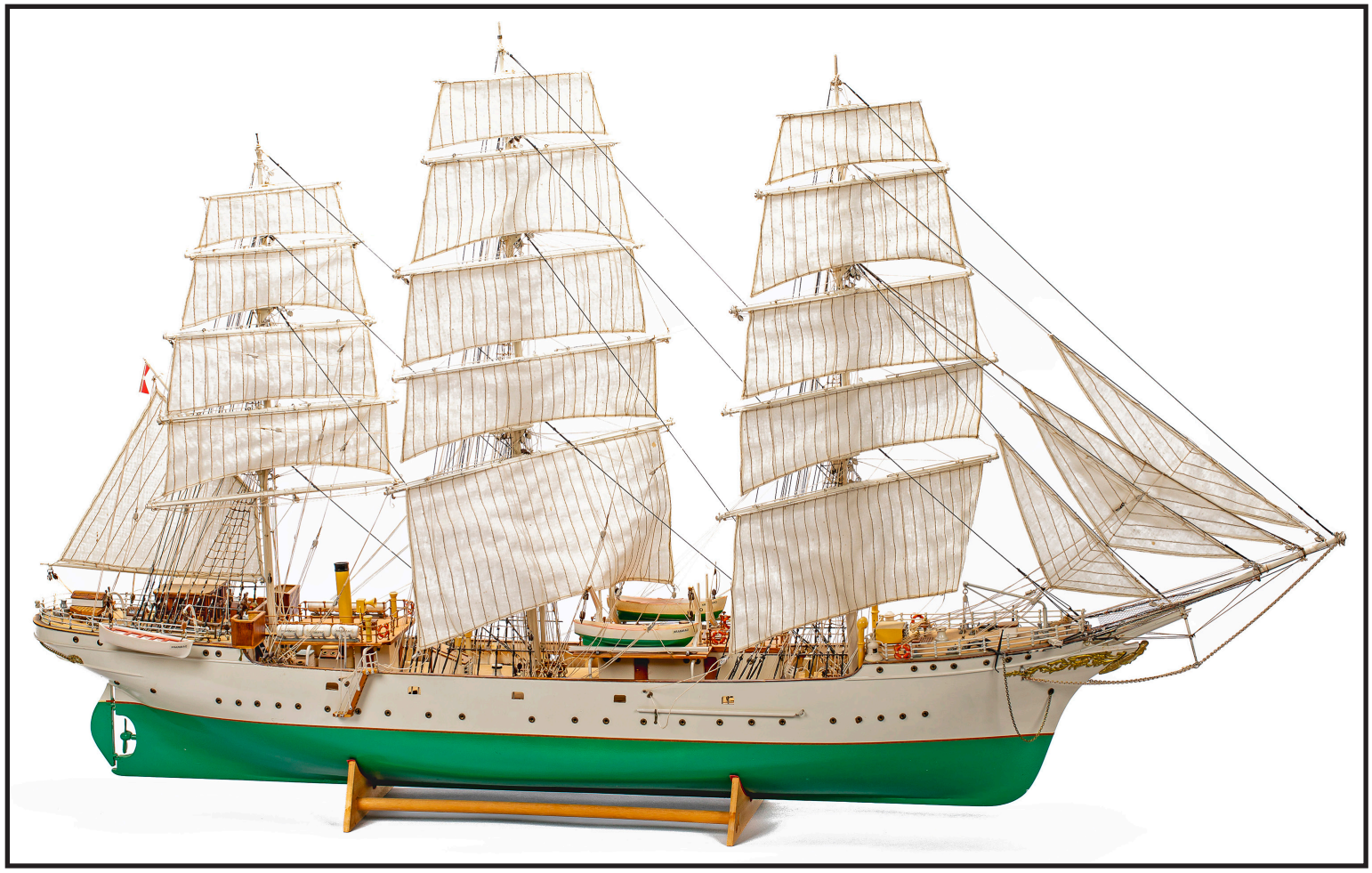

Designed and made in Denmark

www.billingboats.com

50-51021-2 060825

Skoleskibet DANMARK's historie.

Den danske stats uddannelsesskib for vordende navigatører. Bygget af stål på Nakskov skibsværft A/S og udleveret i 1933. Hun er forsynet med seks vandtætte skodder, radiotelegraf og en dieselmotor med 250 hestekræfter.
Desuden har hun ekkolod og fryserum.
Bruttoregister tonnagen er på 777 tons.
Dimensioner: Længde 65m, bredde 10m.
Skrogets dybde fra dæk 6 m, og hun stikker 4,5 m under vandlinien. Mandskabet består af: 16 over- og underofficerer, I kaptajn, 6 styrmænd, 1 maskinmester, 1 læge, 1 radiotelegrafist, 1 lærer, 1 hovmester, 1 kok, 1 bager, 1 tømrer, 1 sejlmager og ca. 120 elever. De skal være 15-18 år for at blive elev, og de skal have sejlet i mindst 4 måneder. For ganske få år siden, var 2 års sejlads med søgående sejlskibe en betingelse for, at man kunne erhverve bevis som styrmand. Den eneste mulighed for at undgå dette, var netop skoleskibene. Det samlede togt er på op til 10 måneder. Det deles i to afsnit; Ét om sommeren på ca. 2½ måned, og ét om vinteren på ca. 7 måneder i de sydlige farvande.

The history of the Training ship DANMARK.

This ship is owned by the Danish State and used for the training of navigators. She was built from steel by Nakskov Shipyard and was ready for delivery in 1933. She is equipped with six bulkheads of a watertight type, with wireless telegraph and a diesel engine of 250 HP. Also, she is equipped with an echo sounder and a cold storage.
Gross registered tonnage is 777 tons.
Dimensions: Length 65 metres, width 10 metres. Depth of hull from deck is 6 metres, and she draws 4,5 metres below the waterline. The crew is made up of 16 officers and petty officers, a captain, 6 mates, an engineer, a doctor, a wireless operator, a teacher, a steward, a cook, a baker, a carpenter, a sail maker, and about 12O trainees. Enrolment age for the trainees is from 15-18, and they must have sailed for at least 4 months. Only a few years ago, 2 years training in sailing vessels was a requirement for the person who wanted to acquire a certificate of competency as mate. The only possibility of fulfilling this requirement was to enrol as a trainee. Each cruise lasts up to 10 months and is divided into two sections, a summer cruise lasting for about 2½ months and a winter cruise lasting for about 7 months and located in the Southern Seas.

Die Geschichte des Schulschiffes DANMARK.

Das Schiff des dänischen Staates zur Ausbildung angehender Navigatoren. Sie ist bei der Nakskov Schiffswerft A/S aus Stahl gebaut und wurde im Jahre 1933 ausgeliefert. Sie ist mit sechs wasserdichten Schotten, mit Funkanlage sowie mit einem 250 PS Dieselmotor versehen. Darüber hinaus hat Sie Echolot und Gefrierräume.
Der Schiffsraum beträgt 777 Bruttoregistertonnen.
Größe: Länge 65 m, Breite 10 m.
Die Tiefe des Rumpfes vom Deck 6 m und Ihr Tiefgang unter Wasserlinie beträgt 4,5 m. Die Mannschaft besteht aus 16 Offizieren und das Stammpersonal aus Kapitän, 6 ersten Offizieren, 1 Maschinisten, 1 Arzt, 1 Bordfunker, 1 Lehrer, 1 Steward, 1 Koch, 1 Bäcker, 1 Zimmermann, 1 Segelmacher und ca. 120 Schüler. Man muss 15 bis 18 Jahre alt sein, und als Schüler an Bord aufgenommen zu werden und man muss mindestens 4 Monate auf einem Schiff gefahren sein. Noch vor wenigen Jahren war die Erwerbung des Zeugnisses eines ersten Offiziers durch einen 2-jährigen Dienst auf Seegängen Segelschiffen Voraussetzung. Die einzige Möglichkeit zur Erfüllung dieser Forderung waren eben die Schulschiffe. Die gesamte Fahrzeit beträgt 10 Monate, in zwei Abschnitten unterteilt eine ca. 2½ Monate Fahrt im Sommer und einer ca. 7 Monate Fahrt im Winter in den südlichen Gewässern



Historique du bateau école 'DANMARK'.

CE bateau est la propriété de l'Etat Danois. Il est utilisé pour la formation des Marins stagiaires. C'est donc un bateau école. Il a été construit par Nakskov Shipyard et complètement terminé en 1933.
Sa conception est basée sur une qualité essentielle: La securité. La coquê, construite en fer, comporte 6 compartiments étanches. Un moteur auxiliaire diesel de 250 HP équipe le bateau qui comporte éqalement la radio (télégraphie sans fil), un sonderur d'échos et une chambre froide.
Tonnage écrit sur registre de mer: 777 tonneaux.
Dimensions: Longueur 65 métres, largeur 10 métres. Profonderur de la coque, en partant de pont: 6 métres dont 4,5 métres au dessus de la ligne de flottaison.
L'équipage se compose de 16 officiers et quartiers maitres, 1 capitaine, 6 officiers en second, un igénie-ur, un docteur, un opèrateur radio, un instructeur, un steward, un cuisinier, un boulanger, un menuisier, un réparateur de voiles et environ 120 stagiaires. L'âge d'engagement pour les stagiaires varie do 15 à 18 ans. Les stagiaires doivent avoir l'expórience de plusieurs mois de navigation avant d'embarquer sur le DANMARK: Il y a seulement quelques années, 2 ans d'école sur un voilier était la condition requise pour qui voulait obtenir le grade de second. La seule possibilité pour y parvenir était de s'engager comme stagiaire. Chaque croisière dure au moins 10 moiset se divise en deux périodes: une croisière d'été durant environ 2½ mois et demi et uns croisière d'hiver de 7 mois dans les mers du Sud.

Geschiedenis van de DANMARK.

De Danmark is eigendom van de Deense Staat en wordt gebruikt voor de opleiding van officieren. Zij werd van staal gebouwd op de Nakskov Scheepsverf en werd in 1933 afgeleverd. Zij is uitgerust met 6 waterdichte schotten, radio-telegraaf, echolood, een dieselmotor van 250pk en een vriesruimte.
Ze meet 777 BRT.
Afmetingen: Lengte 65 m, breedte 10 m, hoogte kiel/dek 6 m, en beneden de waterlijn 4,5 m. De bemanning bestaat uit de kapitein, 16 officieren en onder-officieren, 6 stuurlieden, een machinist, een doktor, een marconist, een leraar, een hofmeester, een kok, een bakker, een timmerman, een zeilmaker, een ongeveer 120 cadetten. De leeftijd van de cadetten loopt van 15-18 jaar en ze moeten tenminste 4 maanden gevaren hebben.Tot voor enige jaren was een 2 jaarlijkse opleiding op een zeilschip noodzakelijk voor die mensen die stuurman wilden worden. De enige mogelijkheid hiertoe was om als cadet in te schrijven. Ledere reis duurt max. 10 maanden en is in tweeden gedeeld, een zomerreis van ca. 2½ maanden een winterreis van ca. 7 maanden en die door de zuidelijke oceanen voert

Table of contents for 'Danmark' Art No. 5005

Pcs.	No.	Dimension	Material	DK	GB	D	F
1	1A	5 mm x-veneér	93229L	Køl	Keel	Kiel	Quille
1	1B	5 mm x-veneér	93230L	Agterstævn	Sternpost	Achtersteven	Piéce de proue
1	1C	5 mm x-veneér	93230L	Stævn	Bow	Vorsteven	Proue
1	2	5 mm x-veneér	93230L	Spante	Frame	Spant	Couple
1	3	5 mm x-veneér	93230L	Spante	Frame	Spant	Couple
1	4	5 mm x-veneér	93229L	Spante	Frame	Spant	Couple
1	5	5 mm x-veneér	93229L	Spante	Frame	Spant	Couple
1	6	5 mm x-veneér	93229L	Spante	Frame	Spant	Couple
1	7	5 mm x-veneér	93229L	Spante	Frame	Spant	Couple
1	8	5 mm x-veneér	93229L	Spante	Frame	Spant	Couple
1	9	5 mm x-veneér	93229L	Spante	Frame	Spant	Couple
1	10	5 mm x-veneér	93229L	Spante	Frame	Spant	Couple
1	11	5 mm x-veneér	93229L	Spante	Frame	Spant	Couple
1	12	5 mm x-veneér	93229L	Spante	Frame	Spant	Couple
1	12A	5 mm x-veneér	93229L	Bjælkebugt	Former	Balkbögen	Traverses
1	13	5 mm x-veneér	93230L	Spante	Frame	Spant	Couple
1	14	5 mm x-veneér	93230L	Spante	Frame	Spant	Couple
1	15	5 mm x-veneér	93229L	Spante	Frame	Spant	Couple
1	15	5 mm x-veneér	93230L	Spante	Frame	Spant	Couple
2	16	5 mm x-veneér	93229L	Spante	Frame	Spant	Couple
1	17	32x42x80mm	Balsa	Balsa klods	Balsa block	Balsa block	Bloc Balsa
1	18	5 mm x-veneér	93229L	Hjælpestykke	Auxiliary piece	Hilfsstück	Pièce annexe
1	19	5 mm x-veneér	93230L	Hjælpestykke	Auxiliary piece	Hilfsstück	Pièce annexe
1	20	5 mm x-veneér	93229L	Skot	Bulkhead	Schott	Cloison
1	20A	2 mm x-veneér	93233L	Skot/agter	Bulkhead/aft	Schott/achter	Pont/arrière
1	21	5 mm x-veneér	93229L	Hjælpestykke	Auxiliary piece	Hilfsstück	Pièce annexe
2	22	2 mm x-veneér	93232L	Hjælpestykke	Auxiliary piece	Hilfsstück	Pièce annexe
1	23	2 mm x-veneér	93232L	Hoveddæk	Main deck	Hauptdeck	Pont principal
1	24	2 mm x-veneér	93232L	Dæk, agter	Deck, aft	Deck, achtern	Pont, arriére
2	25	2 mm x-veneér	93232L	Nedgang	Companion	Niedergang	Ecoutille avant
2	26	2 mm x-veneér	93233L	Agterskot	Bulkhead, stern	Achterschott	Pont arriére
2	27	2 mm x-veneér	93233L	Agterskot	Bulkhead, stern	Achterschott	Pont arriére
1	28	2 mm x-veneér	93233L	Dæk/stævn	Deck/stem	Deck/Vorsteven	Pont/étrave
1	29	2 mm x-veneér	93233L	Agterskot	Bulkhead, stern	Achterschott	Pont arriére
2	30	2 mm x-veneér	93233L	Dørk/stævn	Floor/stern	Gräting/Vorschiff	Parquet/étrave
2	31	2 mm x-veneér	3235L	Faconbeklædning	Formed piece, planking	Facon Beplankung	Piece prefabriquee
2	31A	2 mm x-veneér	3234L	Faconbeklædning	Formed piece, planking	Facon Beplankung	Piece prefabriquee
2	32	2 mm x-veneér	93232L	Faconbeklædning	Formed piece, planking	Facon Beplankung	Piece prefabriquee
1	33	2 mm x-veneér	3236L	Faconbeklædning	Formed piece, planking	Facon Beplankung	Piece prefabriquee
1	34	2 mm x-veneér	93232L	Faconbeklædning	Formed piece, planking	Facon Beplankung	Piece prefabriquee
1	34 A	2 mm x-veneér	93232L	Faconbeklædning	Formed piece, planking	Facon Beplankung	Piece prefabriquee
42	35	1,8x7x780mm	Obechi	Liste/beklædning	Strip/planking	Leiste/Beplankung	Babuettes/bordage
1	36 A	5 mm x-veneér	93229L	Bedding	Bedding Slip	Helling	Cale de construction
1	36 B	5 mm x-veneér	93230L	Bedding	Bedding Slip	Helling	Cale de construction
1	37 A	5 mm x-veneér	93229L	Bedding	Bedding Slip	Helling	Cale de construction
1	37 B	5 mm x-veneér	93229L	Bedding	Bedding Slip	Helling	Cale de construction
1	38	5 mm x-veneér	93229L	Ror	Rudder	Ruder	Gouvernail

Pcs.	No.	Dimension	Material	DK	GB	D	F
4	38 A	2 mm x-veneér	93232L	Rorhængsel	Rudder suspension	Ruderaufhängung	Suspension de gouvernail
2	39	1,8x2x550mm	Obechi	Liste	Strip	Leiste	Baguette
7	40	0,7x2x550mm	Annegré	Liste	Strip	Leiste	Baguette
94	41	0,7x3x550mm	Annegré	Liste	Strip	Leiste	Baguette
2	42	2 mm x-veneér	93232L	Kofilnaglebænk	Belaying pin bench	Belegnägelbank	Ratelier de cordage
1	43	2 mm x-veneér	93232L	Kofilnaglebænk	Belaying pin bench	Belegnägelbank	Ratelier de cordage
2	44	2 mm x-veneér	93232L	Kofilnaglebænk	Belaying pin bench	Belegnägelbank	Ratelier de cordage
2	45	2 mm x-veneér	93232L	Kofilnaglebænk	Belaying pin bench	Belegnägelbank	Ratelier de cordage
2	46	2 mm x-veneér	93232L	Kofilnaglebænk	Belaying pin bench	Belegnägelbank	Ratelier de cordage
1	47	2 mm x-veneér	93232L	Kofilnaglebænk	Belaying pin bench	Belegnägelbank	Ratelier de cordage
2	48	5 mm x-veneér	93230L	Skylight, opbygning	Skylight, structure	Oberlicht, Aufbau	Claire voie, structure
6	49	5 mm x-veneér	93229L	Skylight, opbygning	Skylight, structure	Oberlicht, Aufbau	Claire voie, structure
4	50	3 mm x-veneér	3331L	Ventil/sokkel	Vent/tube	Lüfter/rohr	Manche á air/tube
2	51	2 mm x-veneér	93233L	Kahyt/ende	Cabin/end	Kajüte/ende	Cabine/bout
1	52	2 mm x-veneér	93233L	Kahyt, side	Cabin, side	Kajüte,seite	Coté de cabine
1	53	2 mm x-veneér	93233L	Kahyt, side	Cabin, side	Kajüte,seite	Coté de cabine
1	54	2 mm x-veneér	93233L	Kahyt, tag	Cabin, roof	Kajüten, Dach	Cabine, toit
2	55	5 mm x-veneér	93230L	Klods	Block	Klotz	Poulie
1	56	2 mm x-veneér	93233L	Kasselåg	Boxcover	Kasten-deckel	Couvercle de caisse
4	57	5 mm x-veneér	93229L	Nedgang	Companion	Niedergang	Ecoutille avant
1	58	2 mm x-veneér	93233L	Nedgang/Tag	Companion/Roof	Niedergang/Dach	Couroir/Toit; Ecoutille avant
1	59	2 mm x-veneér	93233L	Nedgang, luge	Companion, hatch	Niedergangskappe, luke	Ecoutille avant
6	60	5 mm x-veneér	93230L	Ventil/sokkel	Vent/tube	Lüfter/rohr	Manche á air/tube
1	61	2 mm x-veneér	93233L	Kahyt, side	Cabin, side	Kajüte,seite	Coté de cabine
1	62	2 mm x-veneér	93232L	Kahyt/ende	Cabin/end	Kajüte/ende	Cabine/bout
1	63	2 mm x-veneér	93233L	Kahyt/ende	Cabin/end	Kajüte/ende	Cabine/bout
1	64	2 mm x-veneér	93233L	Kahyt, tag	Cabin, roof	Kajüten, Dach	Cabine, toit
6	65	5 mm x-veneér	93229L	Skylight, opbygning	Skylight, structure	Oberlicht, Aufbau	Claire voie, structure
5	66	5 mm x-veneér	93230L	Skylight, opbygning	Skylight, structure	Oberlicht, Aufbau	Claire voie, structure
2	67	5 mm x-veneér	93230L	Skylight, opbygning	Skylight, structure	Oberlicht, Aufbau	Claire voie, structure
2	68	2 mm x-veneér	93232L	Kahyt, side	Cabin, side	Kajüte,seite	Coté de cabine
1	69	2 mm x-veneér	93233L	Kahyt/ende	Cabin/end	Kajüte/ende	Cabine/bout
1	70	2 mm x-veneér	93233L	Kahyt/ende	Cabin/end	Kajüte/ende	Cabine/bout
1	71	2 mm x-veneér	93233L	Kahyt, tag	Cabin, roof	Kajüten, Dach	Cabine, toit
1	72	5 mm x-veneér	93230L	Klods	Block	Klotz	Poulie
2	73	2 mm x-veneér	93233L	Bro, bund	Bridge, bottom	Komm.brücke, boden	Passerelle, fond
2	74	2 mm x-veneér	93233L	Bro, side	Bridge, side	Brücke, Seite	Pont, côte
2	75	2 mm x-veneér	93233L	Bro, side	Bridge, side	Brücke, Seite	Pont, côte
2	76	2 mm x-veneér	93233L	Bro, side	Bridge, side	Brücke, Seite	Pont, côte
2	77	2 mm x-veneér	93233L	Bro, side	Bridge, side	Brücke, Seite	Pont, côte
2	78	2 mm x-veneér	93233L	Bro, side	Bridge, side	Brücke, Seite	Pont, côte
1	79	2 mm x-veneér	93233L	Gelænder	Rail	Geländer	Bastingage
1	80	2 mm x-veneér	93233L	Gelænder	Rail	Geländer	Bastingage
2	81	2 mm x-veneér	93233L	Gelænder	Rail	Geländer	Bastingage
12	82	2 mm x-veneér	93232L	Redningsflåde/holder	Liferaft/support	Rettungsinsel/stützen	Radeau de sauvetage/support
1	83	2 mm x-veneér	93233L	Overdæk	Upper deck	Oberdeck	Pont supérieure
1	84	2 mm x-veneér	93233L	Støtte	Support	Stütze	Support
2	85	2 mm x-veneér	93232L	Støtte	Support	Stütze	Support

Pcs.	No.	Dimension	Material	DK	GB	D	F
2	86	8x8x60mm	Basswood	Skorsten	Chimney	Schornstein	Cheminée
1	87	2 mm x-veneér	93233L	Skorsten/top	Funnel/top	Schornstein/Top	Cheminée/Haut
1	88 A	2 mm x-veneér	93233L	Overdæk	Upper deck	Oberdeck	Pont supérieure
1	88 B	2 mm x-veneér	93233L	Overdæk	Upper deck	Oberdeck	Pont supérieure
4	89	2 mm x-veneér	93232L	Støtte	Support	Stütze	Support
6	90	2 mm x-veneér	93232L	Redningsflåde/holder	Liferaft/support	Rettungsinsel/stützen	Radeau de sauvetage/support
2	91	5 mm x-veneér	93230L	Luge	Hatch	Luke	Ecoutille
1	92	2 mm x-veneér	93233L	Luge	Hatch	Luke	Ecoutille
1	93	4x4x300mm	Basswood	Liste	Strip	Leiste	Baguette
1	94	ø2x155mm	Basswood	Rundstok	Round stick	Rundstock	Baguette ronde
1	95	1,8x3x550mm	Obechi	Liste	Strip	Leiste	Baguette
2	96	2 mm x-veneér	93232L	Liste, Ræling	Strips, Rail	Streifen, Schiene	Bandes, rail
2	98 A	2 mm x-veneér	93232L	Mærs	Top	Mars	Hûne
2	98 B	2 mm x-veneér	93232L	Mærs	Top	Mars	Hûne
2	98 C	2 mm x-veneér	93232L	Mærs	Top	Mars	Hûne
2	98 D	2 mm x-veneér	93232L	Mærs	Top	Mars	Hûne
1	99 A	2 mm x-veneér	93232L	Mærs	Top	Mars	Hûne
1	99 B	2 mm x-veneér	93232L	Mærs	Top	Mars	Hûne
2	99 C	2 mm x-veneér	93232L	Mærs	Top	Mars	Hûne
2	99 D	2 mm x-veneér	93232L	Mærs	Top	Mars	Hûne
2	100	2 mm x-veneér	93232L	Motorbåd/støtte	Motorboat/Support	Motorboot/Stützen	Canot á moteur/Support
2	101	2 mm x-veneér	93232L	Kran/beslag	Crane/Fitting	Kran/Beschlag	Grue/Garniture
10	102	2 mm x-veneér	93232L	Kran/beslag	Crane/Fitting	Kran/Beschlag	Grue/Garniture
2	103	2 mm x-veneér	93232L	Kran	Crane	Kran	Grue
2	104	2 mm x-veneér	93232L	Gummibåd/støtte	Rubberboat/Support	Schlauchboot/Stützen	Canot pneumatque/Support
1	105	2 mm x-veneér	93232L	Svingkran	Slewing crane	Schwingkran	Grue tournante
1	106	2 mm x-veneér	93232L	Svingkran, skive	Slewing crane/Disc	Schwingkran/Scheibe	Grue tournante/Tranche
1	107	ø6x150mm	Basswood	Rundstok	Round stick	Rundstock	Baguette ronde
1	108	2 mm x-veneér	93232L	Gummibåd/bund	Rubber boat/Bottom	Schlauchboot/Boden	Canot pneum./fondement
1	109	5 mm x-veneér	93229L	Gummibåd/top	Rubberboat/Top	Schlauchboot/Top	Canot pneumatque/Haut
2	110	2 mm x-veneér	93232L	Gummibåd/motor	Rubberboat/Engine	Schlauchboot/Motor	Canot pneumatque/Moteur
1	111	1 mm x-veneér	93231L	Motorbåd/dæk	Motorboat/Deck	Motorboot/Deck	Canot á moteur/Deck
2	112	1 mm x-veneér	93231L	Vinduesrammer	Window frames	Fensterrahmen	Encadrements de fenetres
2	113	1 mm x-veneér	93231L	Vinduesrammer	Window frames	Fensterrahmen	Encadrements de fenetres
1	114	1 mm x-veneér	93231L	Vinduesrammer	Window frames	Fensterrahmen	Encadrements de fenetres
1	115	1 mm x-veneér	93231L	Kant	Edge	Kante	Bord
2	116	1 mm x-veneér	93231L	Lejder	Ladder	Leiter	Echelle
2	117	2 mm x-veneér	93233L	Kasse	Box	Kiste	Caisse
8	118	3 mm x-veneér	3331L	Kasse	Box	Kiste	Caisse
2	119	5 mm x-veneér	93229L	Kasse	Box	Kiste	Caisse
1	120	ø2x50mm	Brass	Messingrør	Brass pipe	Messingrohr	Tube de laiton
12	121	5 mm x-veneér	93229L	Ventil/top	Vent/top	Lüfter/top	Manche á air/tête
1	124	90x120mm	Acetate	Acetat	Acetate	Azetat	Rhodoid
1	125	ø4x160mm	Basswood	Ventil/sokkel	Vent/tube	Lüfter/rohr	Manche á air/tube
1	126	2 mm x-veneér	93232L	Nedgang	Companion	Niedergang	Ecoutille avant
1	127	1 mm x-veneér	93231L	Skylight, opbygning	Skylight, structure	Oberlicht, Aufbau	Claire voie, structure
2	128	2 mm x-veneér	93232L	Skylight, opbygning	Skylight, structure	Oberlicht, Aufbau	Claire voie, structure
2	129	2 mm x-veneér	93232L	Kasse	Box	Kiste	Caisse
1	130	3 mm x-veneér	3331L	Luge	Hatch	Luke	Ecoutille

Pcs.	No.	Dimension	Material	DK	GB	D	F
1	131	3 mm x-veneér	3331L	Skylight, opbygning	Skylight, structure	Oberlicht, Aufbau	Claire voie, structure
1	132	ø8x300mm	Basswood	Rundstok	Round stick	Rundstock	Baguette ronde
1	M 0	ø4x140mm	Basswood	Mast	Mast	Mast	Mât
2	M 1	ø4x180mm	Basswood	Mast	Mast	Mast	Mât
1	M 2	ø5x240mm	Basswood	Mast	Mast	Mast	Mât
2	M 3	ø6x180mm	Basswood	Mast	Mast	Mast	Mât
2	M 4	ø6x235mm	Basswood	Mast	Mast	Mast	Mât
2	M 6	ø8x260mm	Basswood	Mast	Mast	Mast	Mât
1	R 0	ø3x155mm	Basswood	Ræer	Yards	Rähen	Vergues
6	R 1	ø3x140mm	Basswood	Ræer	Yards	Rähen	Vergues
1	R 2	ø4x180mm	Basswood	Ræer	Yards	Rähen	Vergues
4	R 3	ø4x180mm	Basswood	Ræer	Yards	Rähen	Vergues
1	R 4	ø4x225mm	Basswood	Ræer	Yards	Rähen	Vergues
3	R 5	ø4x225mm	Basswood	Ræer	Yards	Rähen	Vergues
2	R 6	ø5x250mm	Basswood	Ræer	Yards	Rähen	Vergues
2	R 7	ø5x280mm	Basswood	Ræer	Yards	Rähen	Vergues
1		60x80cm	Cloth	Sejlstof	Sailcloth	Segelstoff	Tisseu de voile
1		110x220mm		Net	Net	Netz	Filet
1			TR 103	Transfers	Transfers	Abziehbilder	Decalcomanies
1			FL 112	Flag	Flag	Flagge	Drapeau
3				Hovedtegninger	Plans	Zeichnungen	Plans
1		A4		Byggevejledning	Building instruction	Bauanleitung	Instruction de montage

Table of contents for 'Danmark' Art No. 5005

Pcs.	No.	Dimension	Material	NL	E	I	P
1	1A	5 mm x-veneér	93229L	Kiel	Quilla	Chiglia	Quilha
1	1B	5 mm x-veneér	93230L	Achtersteven	Roda trasera	Dritto di poppa	Poste da pópa
1	1C	5 mm x-veneér	93230L	Voorsteven	Proa	Prua	Peca da próa
1	2	5 mm x-veneér	93230L	Spant	Cuaderna	Ordinata	Armação
1	3	5 mm x-veneér	93230L	Spant	Cuaderna	Ordinata	Armação
1	4	5 mm x-veneér	93229L	Spant	Cuaderna	Ordinata	Armação
1	5	5 mm x-veneér	93229L	Spant	Cuaderna	Ordinata	Armação
1	6	5 mm x-veneér	93229L	Spant	Cuaderna	Ordinata	Armação
1	7	5 mm x-veneér	93229L	Spant	Cuaderna	Ordinata	Armação
1	8	5 mm x-veneér	93229L	Spant	Cuaderna	Ordinata	Armação
1	9	5 mm x-veneér	93229L	Spant	Cuaderna	Ordinata	Armação
1	10	5 mm x-veneér	93229L	Spant	Cuaderna	Ordinata	Armação
1	11	5 mm x-veneér	93229L	Spant	Cuaderna	Ordinata	Armação
1	12	5 mm x-veneér	93229L	Spant	Cuaderna	Ordinata	Armação
1	12A	5 mm x-veneér	93229L	Hulpspant	Viga de soporte	Trave ausiliaria	Viga de suporte
1	13	5 mm x-veneér	93230L	Spant	Cuaderna	Ordinata	Armação
1	14	5 mm x-veneér	93230L	Spant	Cuaderna	Ordinata	Armação
1	15	5 mm x-veneér	93229L	Spant	Cuaderna	Ordinata	Armação
1	15	5 mm x-veneér	93230L	Spant	Cuaderna	Ordinata	Armação
2	16	5 mm x-veneér	93229L	Spant	Cuaderna	Ordinata	Armação
1	17	32x42x80mm	Balsa	Balsa blok	bloque de balsa	Blocco di balsa	Bloco Balsa
1	18	5 mm x-veneér	93229L	Hulpstukken	Pieza de ayuda	Pezzo ausiliario	Peça auxiliar
1	19	5 mm x-veneér	93230L	Hulpstukken	Pieza de ayuda	Pezzo ausiliario	Peça auxiliar

Pcs.	No.	Dimension	Material	NL	E	I	P
1	20	5 mm x-veneér	93229L	Schott	Mamparo	Paratía	Anteparo
1	20A	2 mm x-veneér	93233L	Schot/achter	Mamparo / popa	Paratia/poppa	Antepara/aft
1	21	5 mm x-veneér	93229L	Hulpstukken	Pieza de ayuda	Pezzo ausiliario	Peça auxiliar
2	22	2 mm x-veneér	93232L	Hulpstukken	Pieza de ayuda	Pezzo ausiliario	Peça auxiliar
1	23	2 mm x-veneér	93232L	Hoffdek	Cubierta principal	Ponte principale	Deck principal
1	24	2 mm x-veneér	93232L	Dekdeel achter	Cubierta, popa	Ponte di poppa	Deck de popa
2	25	2 mm x-veneér	93232L	Trapafgang	Bajada	Tambuccio	Tambor
2	26	2 mm x-veneér	93233L	Schot, achter	Mamparo, Popa	Paratia di poppa	Traseira da cabine
2	27	2 mm x-veneér	93233L	Schot, achter	Mamparo, Popa	Paratia di poppa	Traseira da cabine
1	28	2 mm x-veneér	93233L	Dek/voor	Cubierta/tallo	Ponte/gambo	Deck/haste
1	29	2 mm x-veneér	93233L	Schot, achter	Mamparo, Popa	Paratia di poppa	Traseira da cabine
2	30	2 mm x-veneér	93233L	Gräting/voorsteven	Piso/popa	Pavimento/poppa	Piso/popa
2	31	2 mm x-veneér	3235L	Gevormd deel	Revestimiento de forma	Pezzo prefabbricato	Amurada da popa
2	31A	2 mm x-veneér	3234L	Gevormd deel	Revestimiento de forma	Pezzo prefabbricato	Amurada da popa
2	32	2 mm x-veneér	93232L	Gevormd deel	Revestimiento de forma	Pezzo prefabbricato	Amurada da popa
1	33	2 mm x-veneér	3236L	Gevormd deel	Revestimiento de forma	Pezzo prefabbricato	Amurada da popa
1	34	2 mm x-veneér	93232L	Gevormd deel	Revestimiento de forma	Pezzo prefabbricato	Amurada da popa
1	34 A	2 mm x-veneér	93232L	Gevormd deel	Revestimiento de forma	Pezzo prefabbricato	Amurada da popa
42	35	1,8x7x780mm	Obechi	Strips/beplanking	Listones/tablones	Striscia/tavolato	Tira/tanque
1	36 A	5 mm x-veneér	93229L	Stander	Soporte	Supporto	Suporte para o casco
1	36 B	5 mm x-veneér	93230L	Stander	Soporte	Supporto	Suporte para o casco
1	37 A	5 mm x-veneér	93229L	Stander	Soporte	Supporto	Suporte para o casco
1	37 B	5 mm x-veneér	93229L	Stander	Soporte	Supporto	Suporte para o casco
1	38	5 mm x-veneér	93229L	Roer	Timón	Timone	Leme
4	38 A	2 mm x-veneér	93232L	Roerophanging	Suspensión del timón	Sospensione del timone	Suspensão do leme
2	39	1,8x2x550mm	Obechi	Strip	Listón	Listello	Tira
7	40	0,7x2x550mm	Annegré	Strip	Listón	Listello	Tira
94	41	0,7x3x550mm	Annegré	Strip	Listón	Listello	Tira
2	42	2 mm x-veneér	93232L	Nagelbank	Banco de cabillas	Cavigliera	Banco dos pinos de amarração
1	43	2 mm x-veneér	93232L	Nagelbank	Banco de cabillas	Cavigliera	Banco dos pinos de amarração
2	44	2 mm x-veneér	93232L	Nagelbank	Banco de cabillas	Cavigliera	Banco dos pinos de amarração
2	45	2 mm x-veneér	93232L	Nagelbank	Banco de cabillas	Cavigliera	Banco dos pinos de amarração
2	46	2 mm x-veneér	93232L	Nagelbank	Banco de cabillas	Cavigliera	Banco dos pinos de amarração
1	47	2 mm x-veneér	93232L	Nagelbank	Banco de cabillas	Cavigliera	Banco dos pinos de amarração
2	48	5 mm x-veneér	93230L	Bovenlicht, opbouw	Lumbrera, estructura	Osteriggio, struttura	Clarabóia, construção
6	49	5 mm x-veneér	93229L	Bovenlicht, opbouw	Lumbrera, estructura	Osteriggio, struttura	Clarabóia, construção
4	50	3 mm x-veneér	3331L	Luchtkoker/buis	Ventilación/tubo	Sfiato/tubo	Ventilação/tubo
2	51	2 mm x-veneér	93233L	Kajuit/eind	Cabina/extremo	Cabina/fine	Cabine/final
1	52	2 mm x-veneér	93233L	Kajuit, zijkanten	Lado de camarote	Cabina-Pezzi laterali	Lateral da cabine
1	53	2 mm x-veneér	93233L	Kajuit, zijkanten	Lado de camarote	Cabina-Pezzi laterali	Lateral da cabine
1	54	2 mm x-veneér	93233L	Kajüit, dak	Cabina de mando	Cabina, tetto	Tecto da cabine
2	55	5 mm x-veneér	93230L	Blok	Bloque	Blocco	Bloco
1	56	2 mm x-veneér	93233L	Deksel	Tapa de caja	Coperchio della cassa	Tampa da caixa
4	57	5 mm x-veneér	93229L	Trapafgang	Bajada	Tambuccio	Tambor
1	58	2 mm x-veneér	93233L	Kajuitstrap/Dak; Trapafgang	Bajada/Techo	Boccaporto/tettuccio	Cobertura da escotilha
1	59	2 mm x-veneér	93233L	Compagne, luik	Bajada, escotilla	Cappa di boccaporto e boccaporto	Escotilha posterior
6	60	5 mm x-veneér	93230L	Luchtkoker/buis	Ventilación/tubo	Sfiato/tubo	Ventilação/tubo
1	61	2 mm x-veneér	93233L	Kajuit, zijkanten	Lado de camarote	Cabina-Pezzi laterali	Lateral da cabine
1	62	2 mm x-veneér	93232L	Kajuit/eind	Cabina/extremo	Cabina/fine	Cabine/final

Pcs.	No.	Dimension	Material	NL	E	I	P
1	63	2 mm x-veneér	93233L	Kajuit/eind	Cabina/extremo	Cabina/fine	Cabine/final
1	64	2 mm x-veneér	93233L	Kajüit, dak	Cabina de mando	Cabina, tetto	Tecto da cabine
6	65	5 mm x-veneér	93229L	Bovenlicht, opbouw	Lumbrera, estructura	Osteriggio, struttura	Clarabóia, construção
5	66	5 mm x-veneér	93230L	Bovenlicht, opbouw	Lumbrera, estructura	Osteriggio, struttura	Clarabóia, construção
2	67	5 mm x-veneér	93230L	Bovenlicht, opbouw	Lumbrera, estructura	Osteriggio, struttura	Clarabóia, construção
2	68	2 mm x-veneér	93232L	Kajuit, zijkanten	Lado de camarote	Cabina-Pezzi laterali	Lateral da cabine
1	69	2 mm x-veneér	93233L	Kajuit/eind	Cabina/extremo	Cabina/fine	Cabine/final
1	70	2 mm x-veneér	93233L	Kajuit/eind	Cabina/extremo	Cabina/fine	Cabine/final
1	71	2 mm x-veneér	93233L	Kajüit, dak	Cabina de mando	Cabina, tetto	Tecto da cabine
1	72	5 mm x-veneér	93230L	Blok	Bloque	Blocco	Bloco
2	73	2 mm x-veneér	93233L	Comm.brug, bodem	Puente, abajo	Ponte, fondo	Ponte, parte inferior
2	74	2 mm x-veneér	93233L	Brug, kant	Puente, lado	Ponte, fiancata	Ponte
2	75	2 mm x-veneér	93233L	Brug, kant	Puente, lado	Ponte, fiancata	Ponte
2	76	2 mm x-veneér	93233L	Brug, kant	Puente, lado	Ponte, fiancata	Ponte
2	77	2 mm x-veneér	93233L	Brug, kant	Puente, lado	Ponte, fiancata	Ponte
2	78	2 mm x-veneér	93233L	Brug, kant	Puente, lado	Ponte, fiancata	Ponte
1	79	2 mm x-veneér	93233L	Reling	Pasamanos	Ringhiera	Amurada
1	80	2 mm x-veneér	93233L	Reling	Pasamanos	Ringhiera	Amurada
2	81	2 mm x-veneér	93233L	Reling	Pasamanos	Ringhiera	Amurada
12	82	2 mm x-veneér	93232L	Reddingsvlot/steunen	Balsa salvavidas/soporte	Zattera di salvataggio/supporto	Liferaft/Suporte
1	83	2 mm x-veneér	93233L	Overdek; Bovendek	Cubierta superior	Ponte superiore	Convés superior
1	84	2 mm x-veneér	93233L	Steun	Soporte	Supporto	Suporte
2	85	2 mm x-veneér	93232L	Steun	Soporte	Supporto	Suporte
2	86	8x8x60mm	Basswood	Schoorsteen	Chimenia	Ciminiera	Chaminé
1	87	2 mm x-veneér	93233L	Schoorsteen/Top	Embudo/parte superior	Imbuto/parte superiore	Funil/top
1	88 A	2 mm x-veneér	93233L	Overdek; Bovendek	Cubierta superior	Ponte superiore	Convés superior
1	88 B	2 mm x-veneér	93233L	Overdek; Bovendek	Cubierta superior	Ponte superiore	Convés superior
4	89	2 mm x-veneér	93232L	Steun	Soporte	Supporto	Suporte
6	90	2 mm x-veneér	93232L	Reddingsvlot/steunen	Balsa salvavidas/soporte	Zattera di salvataggio/supporto	Liferaft/Suporte
2	91	5 mm x-veneér	93230L	Luik	Escotilla	Boccaporto	Escotilha
1	92	2 mm x-veneér	93233L	Luik	Escotilla	Boccaporto	Escotilha
1	93	4x4x300mm	Basswood	Strip	Listón	Listello	Tira
1	94	ø2x155mm	Basswood	Rondhout	Palo redondo	Bastone rotondo	Bastão redondo
1	95	1,8x3x550mm	Obechi	Strip	Listón	Listello	Tira
2	96	2 mm x-veneér	93232L	Strips, rail	Tiras, ferrocarril	Strisce, binario	Tiras, trilho
2	98 A	2 mm x-veneér	93232L	Mars	Cofa	Coffa	Topo
2	98 B	2 mm x-veneér	93232L	Mars	Cofa	Coffa	Topo
2	98 C	2 mm x-veneér	93232L	Mars	Cofa	Coffa	Topo
2	98 D	2 mm x-veneér	93232L	Mars	Cofa	Coffa	Topo
1	99 A	2 mm x-veneér	93232L	Mars	Cofa	Coffa	Topo
1	99 B	2 mm x-veneér	93232L	Mars	Cofa	Coffa	Topo
2	99 C	2 mm x-veneér	93232L	Mars	Cofa	Coffa	Topo
2	99 D	2 mm x-veneér	93232L	Mars	Cofa	Coffa	Topo
2	100	2 mm x-veneér	93232L	Motorboot/Steunen	Lancha/Apoyo	Motoscafo/Supporto	Barco a motor/suporte
2	101	2 mm x-veneér	93232L	Kraan/beslag	Grúa/Montaje	Gru/Allestimento	Guindaste/encaixe
10	102	2 mm x-veneér	93232L	Kraan/beslag	Grúa/Montaje	Gru/Allestimento	Guindaste/encaixe
2	103	2 mm x-veneér	93232L	Kraan	Grúa	Gru	Guindaste
2	104	2 mm x-veneér	93232L	Rubberboot/Steunen	Bote de goma/Apoyo	Gommone/Supporto	Rubberboat/Suporte
1	105	2 mm x-veneér	93232L	Draaikraan	Grúa giratoria	Gru girevole	Guindaste de engasga

Pcs.	No.	Dimension	Material	NL	E	I	P
1	106	2 mm x-veneér	93232L	Draaikraan/Sneetje	Grúa giratoria/Disco	Gru girevole/disco	Guindaste/disco
1	107	ø6x150mm	Basswood	Rondhout	Palo redondo	Bastone rotondo	Bastão redondo
1	108	2 mm x-veneér	93232L	Rubberboot/bodem	Bote de goma/fondo	Gommone/fondo	Bote inflável/fundo
1	109	5 mm x-veneér	93229L	Rubberboot/Top	Bote de goma/arriba	Gommone/Top	Rubberboat/top
2	110	2 mm x-veneér	93232L	Rubberboot/Motor	Bote de goma/motor	Gommone/Motore	Rubberboat/motor
1	111	1 mm x-veneér	93231L	Motorboot/Dek	Lancha/Cubierta	Motoscafo/Ponte	Barco a motor/deck
2	112	1 mm x-veneér	93231L	Raamlijsten	Marcos de ventana	Infisso della finestra	Frames da janela
2	113	1 mm x-veneér	93231L	Raamlijsten	Marcos de ventana	Infisso della finestra	Frames da janela
1	114	1 mm x-veneér	93231L	Raamlijsten	Marcos de ventana	Infisso della finestra	Frames da janela
1	115	1 mm x-veneér	93231L	Rand	Borde	Bordo	Borda
2	116	1 mm x-veneér	93231L	Ladder	Escalera	Scaletta	Escada
2	117	2 mm x-veneér	93233L	Kist	Caja	Cassa	Caixa
8	118	3 mm x-veneér	3331L	Kist	Caja	Cassa	Caixa
2	119	5 mm x-veneér	93229L	Kist	Caja	Cassa	Caixa
1	120	ø2x50mm	Brass	Messing buis	Tubo de latón	Tubo di ottone	Tubo de latão
12	121	5 mm x-veneér	93229L	Luchtkoker/top	Ventilación/superior	Ventilazione/superiore	Ventilação/topo
1	124	90x120mm	Acetate	Acetaat	Acetate	Acetato	Acetato
1	125	ø4x160mm	Basswood	Luchtkoker/buis	Ventilación/tubo	Sfiato/tubo	Ventilação/tubo
1	126	2 mm x-veneér	93232L	Trapafgang	Bajada	Tambuccio	Tambor
1	127	1 mm x-veneér	93231L	Bovenlicht, opbouw	Lumbrera, estructura	Osteriggio, struttura	Clarabóia, construção
2	128	2 mm x-veneér	93232L	Bovenlicht, opbouw	Lumbrera, estructura	Osteriggio, struttura	Clarabóia, construção
2	129	2 mm x-veneér	93232L	Kist	Caja	Cassa	Caixa
1	130	3 mm x-veneér	3331L	Luik	Escotilla	Boccaporto	Escotilha
1	131	3 mm x-veneér	3331L	Bovenlicht, opbouw	Lumbrera, estructura	Osteriggio, struttura	Clarabóia, construção
1	132	ø8x300mm	Basswood	Rondhout	Palo redondo	Bastone rotondo	Bastão redondo
1	M 0	ø4x140mm	Basswood	Mast	Palo	Albero	Mastro
2	M 1	ø4x180mm	Basswood	Mast	Palo	Albero	Mastro
1	M 2	ø5x240mm	Basswood	Mast	Palo	Albero	Mastro
2	M 3	ø6x180mm	Basswood	Mast	Palo	Albero	Mastro
2	M 4	ø6x235mm	Basswood	Mast	Palo	Albero	Mastro
2	M 6	ø8x260mm	Basswood	Mast	Palo	Albero	Mastro
1	R 0	ø3x155mm	Basswood	Stengen	Vergas	Iarde	Quintais
6	R 1	ø3x140mm	Basswood	Stengen	Vergas	Iarde	Quintais
1	R 2	ø4x180mm	Basswood	Stengen	Vergas	Iarde	Quintais
4	R 3	ø4x180mm	Basswood	Stengen	Vergas	Iarde	Quintais
1	R 4	ø4x225mm	Basswood	Stengen	Vergas	Iarde	Quintais
3	R 5	ø4x225mm	Basswood	Stengen	Vergas	Iarde	Quintais
2	R 6	ø5x250mm	Basswood	Stengen	Vergas	Iarde	Quintais
2	R 7	ø5x280mm	Basswood	Stengen	Vergas	Iarde	Quintais
1		60x80cm	Cloth	Zeildoek	Vela	Stoffa per vele	Tecido da vela
1		110x220mm		Net	Red	Rete	Rede
1			TR 103	Transfers	Transfer	Decalcomanie	Decalques
1			FL 112	Vlag	Bandera	Bandiera	Bandeira
3				Tekening	Planes	Piani	Planos
1		A4		Bouwbeschrijving	Instrucciones de montaje	Istruzioni di montaggio	Instruções de montagem

Table of contents for fittingkit 'Danmark' Art No. 5005

Pcs.	No.	Dimension	Material	DK	GB	D	F
2	F1	ø8mm		Lanterne	Lantern	Lanterne	Lanterne
2	F17	20mm	Brass	Bombeslag	Boom fitting	Barfitting	Garniture du bôme
97	F21	ø2x21mm	Brass	Vantskrue	Rigging screw	Wantenschraube	Vis de ridage
1	F22	ø0,3x2500mm	Copper	Kobbertråd	Copperwire	Kupferdraht	Fil de cuivre
1	F22A	ø0,5x2500mm	Copper	Kobbertråd	Copperwire	Kupferdraht	Fil de cuivre
2	F28	ø7x33mm	Plastic	Ventil	Vent	Lüfter	Manche á air
14	F39	ø1x250mm	Brass	Messingtråd	Brass wire	Messingdräht	Fils de laiton
6	F41	12mm	Plastic	Klyds	Fairlead	Klüse	Chaumard
1	F45	ø30mm	Plastic	Skibsskrue	Propeller	Schiffsschraube	Hélice
3	F51	ø24mm	Brass	Rat	Wheel	Steuerrad	Roue
1	F52	ø9mm	Plastic	Nathus	Binnacle	Kompasshaus	Habitacle
136	F54	8mm	Wood	Kofilnagle	Belaying pin	Belegnägel	Cabillot
2	F56	ø5mm	Brass	Klokke	Bell	Glocke	Cloche
3	F57	35mm	Plastic	Anker	Anchor	Anker	Ancre
1 set	F58		Plastic	Galionsfigur	Figurehead	Galionsfigur	Figure de proue
1	F59	20mm	Plastic	Nathus	Binnacle	Kompasshaus	Habitacle
1	F61			Svingkran	Slewing crane	Schwingkran	Grue tournante
1	F68	13mm	Brass	Maskintelegraf	Engine room telegraph	Maschinentelegraph	Commande de machine telegraph
1	F70	150m		Rigningstråd	Rigging thread	Takelgarn	Fil de gréement
1	F71	75m		Rigningstråd	Rigging thread	Takelgarn	Fil de gréement
1	F76	ø2,5x80mm	Brass	Ankerkæde	Anchor chain	Anker kette	Chaine d´ancre
1	F100	ø4x5mm	Brass	Lanterne	Lantern	Lanterne	Lanterne
23	F106	ø4x7mm	Brass	Pullert	Bollard	Poller	Bitte d'amarrage
6	F136	12x12mm	Plastic	Redningsbælte	Lifebelt	Rettungsring	Ceinture de sauvetage
100	F145	14mm	Brass	Gelænderstøtte	Rail stanchion	Relingstütze	Chandelier
2	F168	78mm	Plastic	Redningsbåd	Lifeboat	Rettungsboot	Canot de sauvetage
5	F181	60mm	Plastic	Lejder	Ladder	Leiter	Echelle
2	F190	ø3,8mm	Brass	Ankerklyds	Anchor fairlead	Ankerklüse	Ecubler d'ancre
20	F230	7mm	Brass	Søm	Nail	Nägel	Clou
1	F233-1	90mm	Plastic	Redningsbåd	Lifeboat	Rettungsboot	Canot de sauvetage
1	F272		Brass	Spil	Winch	Winde	Treuil
1	F274		Brass	Bovsprydbeslag	Cap w/ martingale	Bugsprieteselshaupt	Sous barbe de martingale
16	F285	ø2x5,5mm	Brass	Øjebolt	Eye bolt	Augbolzen	Pitons
1	F291	ø5mm	Brass	Wirerulle	Wire reel	Wirerolle	Dévidoir
14	F317	ø4mm	Brass	Koøje	Porthole	Bullauge	Hublot
1	F327	ø1,5x1000mm	Brass	Ankerkæde	Anchor chain	Anker kette	Chaine d´ancre
2	F330	ø1x10mm	Brass	Søm	Nail	Nägel	Clou
2	F348	9mm	Plastic	Klampe	Cleat	Klampe	Taquet
4	F374	ø4mm	Brass	Rulle	Roll	Rolle	Poulie
4	F375	ø5mm	Brass	Rulle	Roll	Rolle	Poulie
3	F378	ø4mm	Brass	Mastetop	Mast head	Masttop	Tête de mât
2	F444	ø10x11mm	Brass	Kapstan	Capstan	Kapstan	Cabestan
35	F447	ø2x18mm	Brass	Vantskrue	Rigging screw	Wantenschraube	Vis de ridage
15	F498	11x22mm	Brass	Råbeslag	Yard fitting	Beschlag für Rahe	Garniture de vergue
6	F499	ø3mm	Brass	Råbeslag	Yard fitting	Beschlag für Rahe	Garniture de vergue
9	F501	ø4mm	Brass	Ring	Ring	Ring	Anneau
26	F502	ø5mm	Brass	Ring	Ring	Ring	Anneau
13	F503	ø6mm	Brass	Ring	Ring	Ring	Anneau
1	F504	ø7mm	Brass	Ring	Ring	Ring	Anneau
4	F511	ø2,5x55mm	Brass	David	Davit	Davit	Bossoir
2	F514	17x50mm	Brass	David	Davit	Davit	Bossoir

Pcs.	No.	Dimension	Material	DK	GB	D	F
1	F527	ø8+ø3mm	Brass	Mastebeslag	Mastfitting	Mastbeschlag	Garniture de mât
1	F528	ø7+ø3mm	Brass	Mastebeslag	Mastfitting	Mastbeschlag	Garniture de mât
2	F529	ø6+ø3mm	Brass	Mastebeslag	Mastfitting	Mastbeschlag	Garniture de mât
4	F530	ø5mm	Brass	Mastebeslag	Mastfitting	Mastbeschlag	Garniture de mât
3	F531	ø4mm	Brass	Mastebeslag	Mastfitting	Mastbeschlag	Garniture de mât
86	F537	25mm	Brass	Røstjern	Chainplate	Rüsteisen	Cadène
10	F546	6x14mm	Brass	Pullert/underlag	Bollard/support	Poller/Unterlag	Bitte/socle
1	F547	ø3x250mm	Brass	Messingrør	Brass pipe	Messingrohr	Tube de laiton
22	F561	ø2x14mm	Brass	Stolpe/naglebænk	Post/pin bench	Sockel/nagelbank	Socle/ratelier
1	F567	14mm	Brass	Bøjle	Yoke	Bügel	Potence
4	F577	ø3x4,25mm	Brass	Pullert	Bollard	Poller	Bitte d'amarrage
2	F578	10x4mm	Brass	Pullert/underlag	Bollard/support	Poller/Unterlag	Bitte/socle
86	F623	ø4,8mm	Brass	Koøje	Portlight	Bullauge	Hublot
40	F663	ø0,75x250mm	Brass	Messingtråd	Brass wire	Messingdräht	Fils de laiton
1	F663-10	ø0,75x100mm	Brass	Messingtråd	Brass wire	Messingdräht	Fils de laiton
77	F664	11mm	Brass	Øjebolt	Eye bolt	Augbolzen	Pitons
2	F685	ø9x3,5mm	Brass	Ventil/top	Vent/top	Lüfter/top	Manche á air/tête
2	F686	ø4x21mm	Brass	Ventil/sokkel	Vent/tube	Lüfter/rohr	Manche á air/tube
2	F689	ø6x21mm	Brass	Kompas	Compass	Kompass	Boussole
225	F697	5mm	Wood	Blok, Enkelt	Block, Single	Block, einzel	Poulie, simple
44	F698	5mm	Wood	Blok, Dobbelt	Block, Double	Block, doppel	Poulies, double
1	F741		Plastic	Plaststøb	Plastic fittings	Plastikspritzling	Plastic moulage
1	F742		Plastic	Plaststøb	Plastic fittings	Plastikspritzling	Plastic moulage
190	F743	9mm	Brass	Øjebolt	Eye bolt	Augbolzen	Pitons

Table of contents for fittingkit 'Danmark' Art No. 5005

Pcs.	No.	Dimension	Material	NL	E	I	P
2	F1	ø8mm		Boordlichten	Linterna	Lanterna	Lanternas
2	F17	20mm	Brass	Lummel	Herraje de la botavara	Bar-montaggi	Encaixe da retranca
97	F21	ø2x21mm	Brass	Wantspanner	Tensor de obenques	Vite sartie	Parafuso do cordame
1	F22	ø0,3x2500mm	Copper	Koperdraad	Alambre de cabre	Filo ni rame	Fio de cobre
1	F22A	ø0,5x2500mm	Copper	Koperdraad	Alambre de cabre	Filo ni rame	Fio de cobre
2	F28	ø7x33mm	Plastic	Luchtkoker	Válvula	Valvola	Respiradouro
14	F39	ø1x250mm	Brass	Messingdraad	Hilo de latón	Filo in ottone	Fio de latão
6	F41	12mm	Plastic	Verhaalklamp	Escobén	Passacavo	Tubarão hawse
1	F45	ø30mm	Plastic	Scheepsschroef	Hélice	Elica	Hélice
3	F51	ø24mm	Brass	Stuurwiel	Volante	Ruota del timone	Volante do timão
1	F52	ø9mm	Plastic	Kompashuis	Bitácora	Cassetta delle bussole	Caixa da bússola
136	F54	8mm	Wood	Korvijnägel	Cabilla	Ribattino	Pino de amarração
2	F56	ø5mm	Brass	Scheepbel	Campanilla	Campana	Sino
3	F57	35mm	Plastic	Anker	Ancla	Ancora	Âncora
1 set	F58		Plastic	Boegbeeld	Figurón de proa	Polena	Figura de proa
1	F59	20mm	Plastic	Kompashuis	Bitácora	Cassetta delle bussole	Caixa da bússola
1	F61			Draaikraan	Grúa giratoria	Gru girevole	Guindaste de engasga
1	F68	13mm	Brass	Machinekamertelegraaf	Telegrafo máquinas	Impianto telegrafico	Sala das máquinas e telégrafo
1	F70	150m		Takelgaren	Hilo de aparejo	Filo per manovre	Linha de cordame
1	F71	75m		Takelgaren	Hilo de aparejo	Filo per manovre	Linha de cordame
1	F76	ø2,5x80mm	Brass	Ankerketting	Cadena de ancla	Catena dell'ancora	Corrente da âncora
1	F100	ø4x5mm	Brass	Boordlichten	Linterna	Lanterna	Lanternas
23	F106	ø4x7mm	Brass	Bolder	Bolardo	Bitta	Poste de amarração
6	F136	12x12mm	Plastic	Reddingsgordel	Cinturón salvavidas	Cintura di salvataggio	Bóia Salva-vidas

Pcs.	No.	Dimension	Material	NL	E	I	P
100	F145	14mm	Brass	Railingpaal	Soporte de pasamanos	Supporti per corrimano	Poste de trilho
2	F168	78mm	Plastic	Reddingsboot	Bote salvavidas	Battello di salvataggio	Barco salva-vidas
5	F181	60mm	Plastic	Ladder	Escalera	Scaletta	Escada
2	F190	ø3,8mm	Brass	Ankerverhaglklamp	Escobén de ancla	Cubia dell'ancora	Reforço da polia da âncora
20	F230	7mm	Brass	Spijkertje	Clavo	Chiodo	Prego
1	F233-1	90mm	Plastic	Reddingsboot	Bote salvavidas	Battello di salvataggio	Barco salva-vidas
1	F272		Brass	Winch	Chigre	Verricello, Arganello	Guincho
1	F274		Brass	Ezelshoofd m. sp. Ruiter	Gorra con martingala	Berretto con martingala	Boné com martingale
16	F285	ø2x5,5mm	Brass	Oogbout	Perno de cáncamo	Bullone ad occhio	Ferrolho
1	F291	ø5mm	Brass	Katrollen	Rodillos alambre	Puleggia	Enrolador
14	F317	ø4mm	Brass	Patrijspoort	Portilla	Oblò	Escotilha
1	F327	ø1,5x1000mm	Brass	Ankerketting	Cadena de ancla	Catena dell'ancora	Corrente da âncora
2	F330	ø1x10mm	Brass	Spijkertje	Clavo	Chiodo	Prego
2	F348	9mm	Plastic	Klamp	Cornamusas	Galloccia	Cunho
4	F374	ø4mm	Brass	Rollen	Rodillo	Pulegge	Polia
4	F375	ø5mm	Brass	Rollen	Rodillo	Pulegge	Polia
3	F378	ø4mm	Brass	Masttop	Extremo superior de palo	Estremitá superiore del palo	Topo de mastro
2	F444	ø10x11mm	Brass	Kaapstander	Cabrestante	Argano	Cabrestante
35	F447	ø2x18mm	Brass	Wantspanner	Tensor de obenques	Vite sartie	Parafuso do cordame
15	F498	11x22mm	Brass	Rabeslag	Herrajes para verga	Accessori	Suporte da verga
6	F499	ø3mm	Brass	Rabeslag	Herrajes para verga	Accessori	Suporte da verga
9	F501	ø4mm	Brass	Ring	Anillo	Anello	Anel
26	F502	ø5mm	Brass	Ring	Anillo	Anello	Anel
13	F503	ø6mm	Brass	Ring	Anillo	Anello	Anel
1	F504	ø7mm	Brass	Ring	Anillo	Anello	Anel
4	F511	ø2,5x55mm	Brass	Davit	Pescante	Gruetta	Serviola/turco
2	F514	17x50mm	Brass	Davit	Pescante	Gruetta	Serviola/turco
1	F527	ø8+ø3mm	Brass	Mastbeslag	Herrajes de palo	Accessorio per albero	Fitting do mastro
1	F528	ø7+ø3mm	Brass	Mastbeslag	Herrajes de palo	Accessorio per albero	Fitting do mastro
2	F529	ø6+ø3mm	Brass	Mastbeslag	Herrajes de palo	Accessorio per albero	Fitting do mastro
4	F530	ø5mm	Brass	Mastbeslag	Herrajes de palo	Accessorio per albero	Fitting do mastro
3	F531	ø4mm	Brass	Mastbeslag	Herrajes de palo	Accessorio per albero	Fitting do mastro
86	F537	25mm	Brass	Putting	Cadenote	Landra	Placas das correntes
10	F546	6x14mm	Brass	Bolder/console	Bolardo/soporte	Dissuasore/supporto	Bollard/Suporte
1	F547	ø3x250mm	Brass	Messing buis	Tubo de latón	Tubo di ottone	Tubo de latão
22	F561	ø2x14mm	Brass	Sockel/nagelbank	Banco de postes/pin	Panca con montanti/perni	Banco de postagem/pino
1	F567	14mm	Brass	Beugel	Percha	Arco	Cana do leme
4	F577	ø3x4,25mm	Brass	Bolder	Bolardo	Bitta	Poste de amarração
2	F578	10x4mm	Brass	Bolder/console	Bolardo/soporte	Dissuasore/supporto	Bollard/Suporte
86	F623	ø4,8mm	Brass	Patrijspoort	Portilla	Oblò	Luz de bombordo
40	F663	ø0,75x250mm	Brass	Messingdraad	Hilo de latón	Filo in ottone	Fio de latão
1	F663-10	ø0,75x100mm	Brass	Messingdraad	Hilo de latón	Filo in ottone	Fio de latão
77	F664	11mm	Brass	Oogbout	Perno de cáncamo	Bullone ad occhio	Ferrolho
2	F685	ø9x3,5mm	Brass	Luchtkoker/top	Ventilación/superior	Ventilazione/superiore	Ventilação/topo
2	F686	ø4x21mm	Brass	Luchtkoker/buis	Ventilación/tubo	Sfiato/tubo	Ventilação/tubo
2	F689	ø6x21mm	Brass	Kompas	Brújula	Bussola	Bússola
225	F697	5mm	Wood	Blok, enkel	Polea, simple	Blocco, semplice	Bloco, simples
44	F698	5mm	Wood	Blok, dubbel	Polea, Doble	Blocco, doppio	Bloce, duplo
1	F741		Plastic	Plastic beslag	Piezas de plastico	Pezzo stampato	Amarração Plastica
1	F742		Plastic	Plastic beslag	Piezas de plastico	Pezzo stampato	Amarração Plastica
190	F743	9mm	Brass	Oogbout	Perno de cáncamo	Bullone ad occhio	Ferrolho

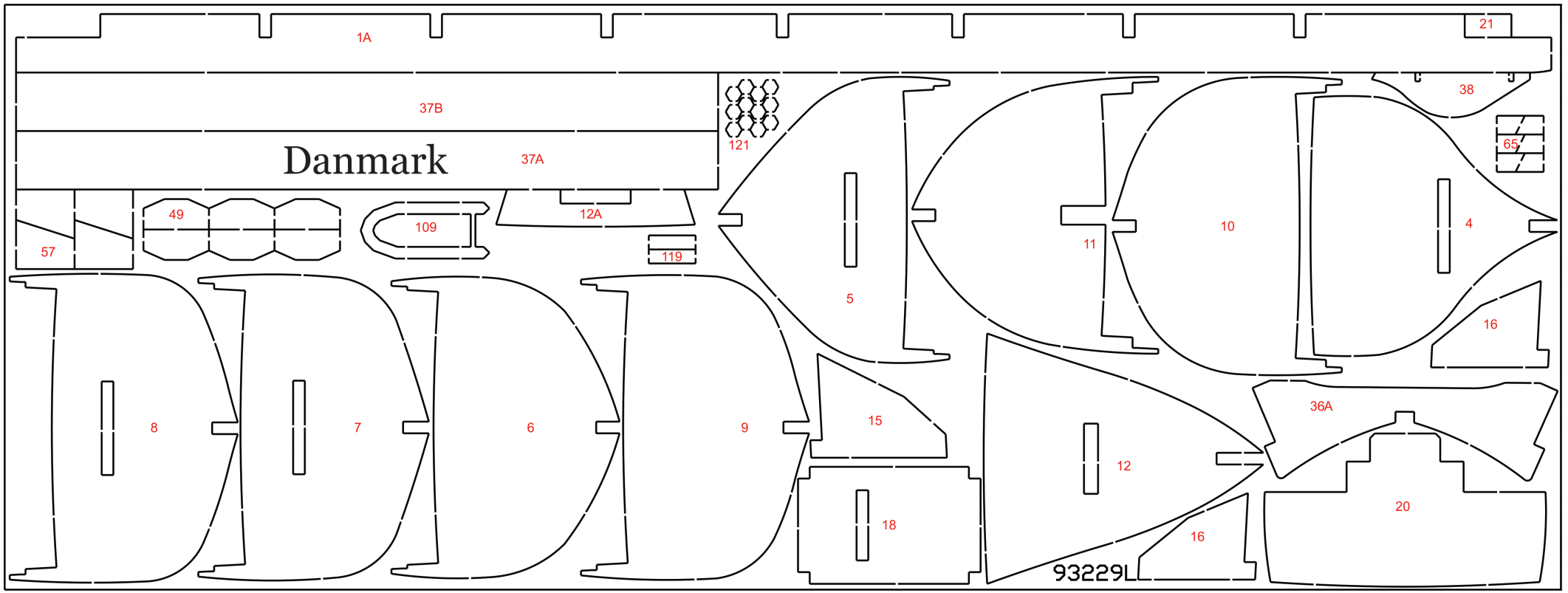



3236 L

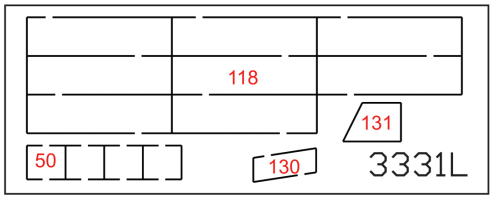

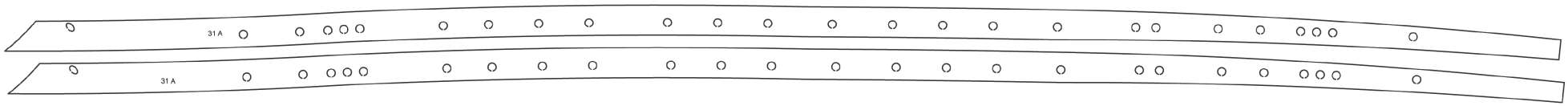

3234 L

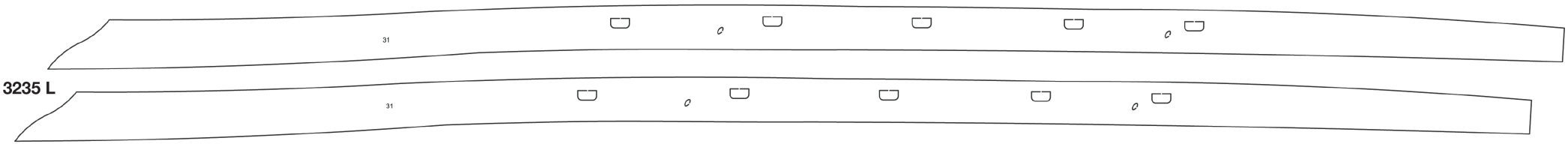

3235 L

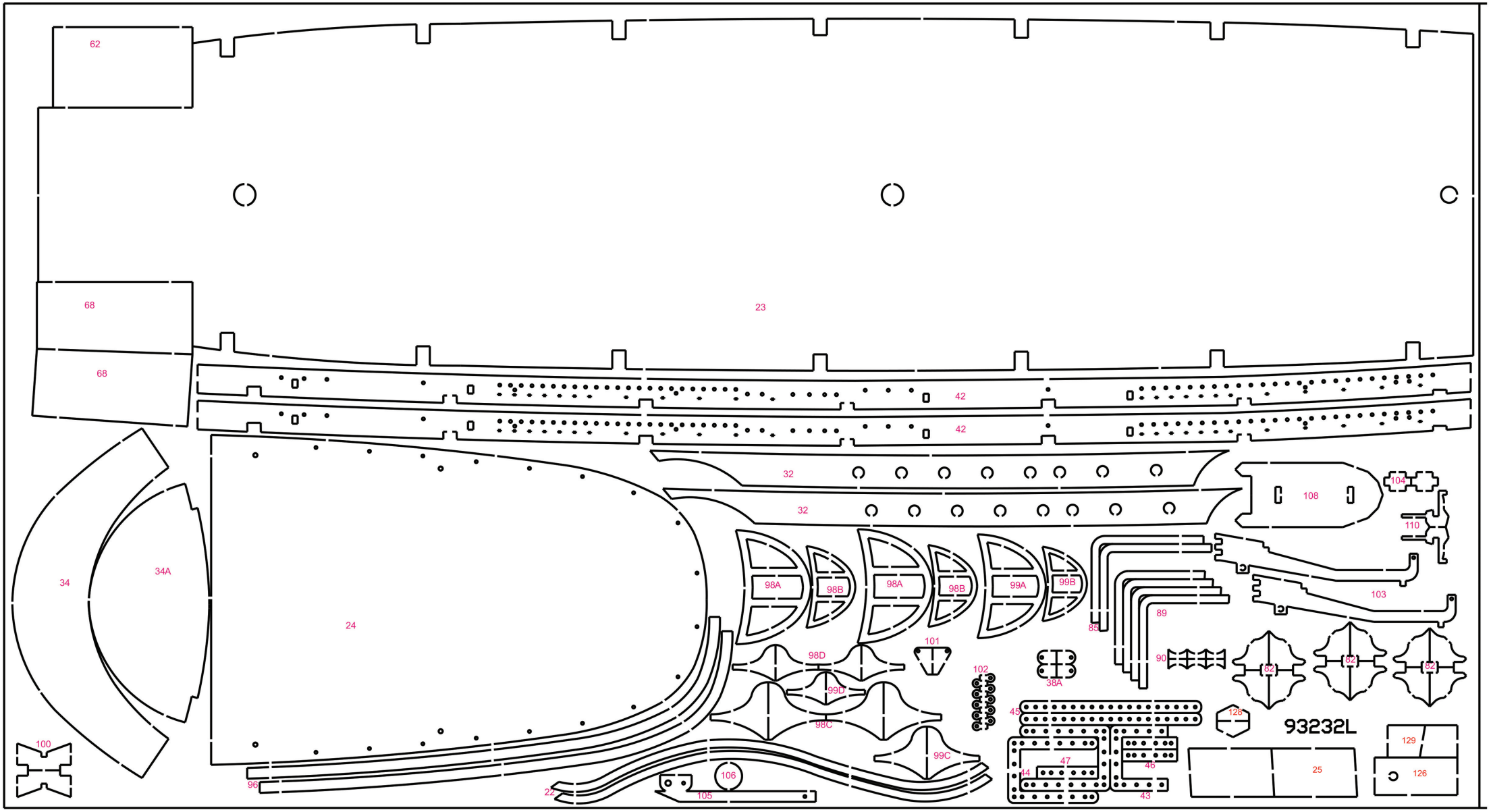
62
68
68
23
42
42
32
32
34
34A
24
98A
98B
98A
98B
99A
99B
108
104
110
103
89
85
90
82
82
82
101
98D
99D
98C
102
38A
45
126
93232L
129
126
100
99C
47
46
44
43
25
106
105
96
22

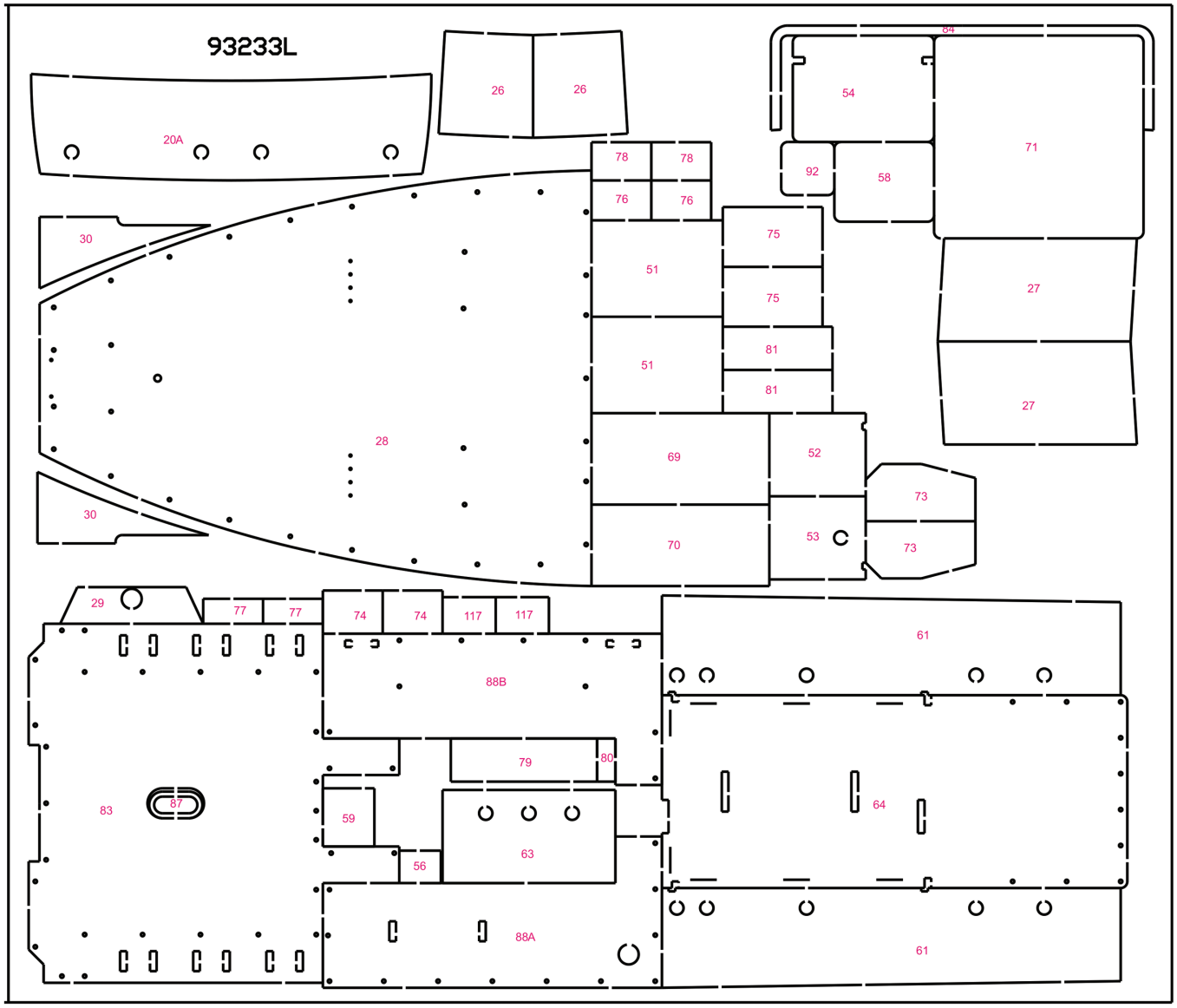
93233L
20A
26
26
84
54
71
78
78
92
58
76
76
75
30
51
75
27
81
51
81
28
69
52
73
30
70
53
73
29
77
77
74
74
117
117
61
88B
79
80
83
87
59
64
63
56
88A
61

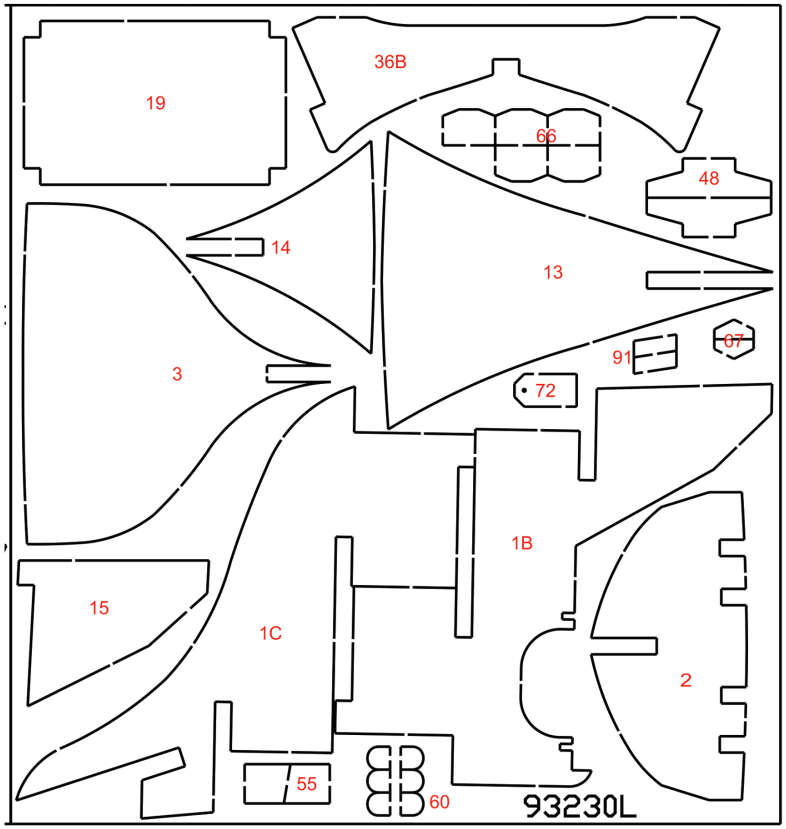
19
36B
66
48
14
13
91
07
3
72
1B
15
1C
2
55
60
93230L

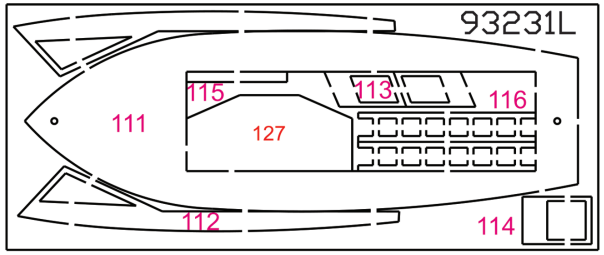
93231L
115
113
116
111
127
112
114


TR 103
50-97110
DANMARK
DANMARK DANMARK
KØBENHAVN
DANMARK DANMARK DANMARK

F 741

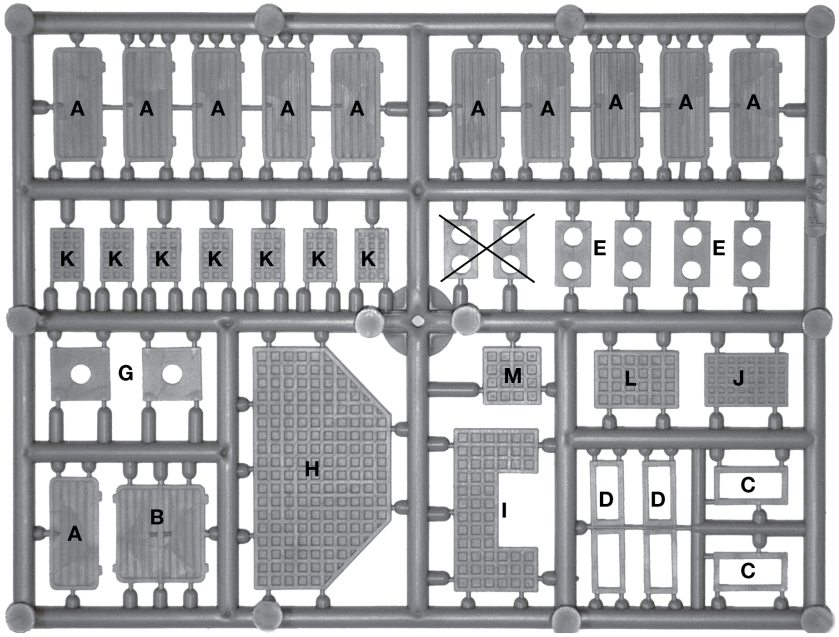

F 742

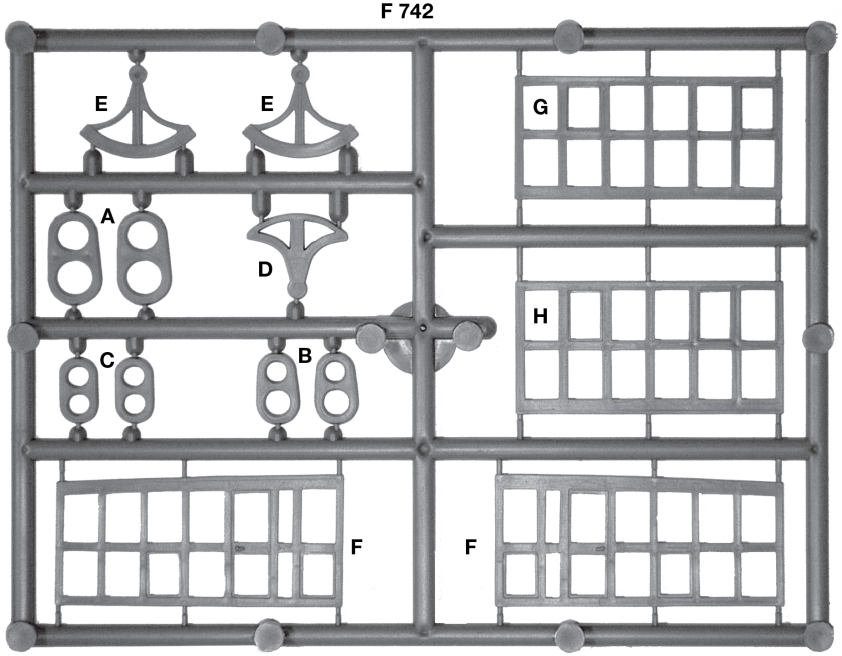


Use Hammer here


Cut in Length


Use File here



Drill


Use Knife here


Cut in Shape


Cut in Shape


Cut in Shape


Draw



Use Filler here



Do Not Glue


Shape over steam



Throw in Bin

BB Glue Type



Plastic Glue



ABS Glue



Wood Glue



Cyano-Acrylate Glue



Epoxy Glue

DK

Symboler	=	Rigningsnummer
	=	Farvenummer
36	=	Bejdse

GB

Symbols	=	Rigging No
	=	Colour Nor
36	=	Stain

D

Zeichen	=	Takel Nr.
	=	Farben Nr
36	=	Beize

F

Symboles	=	Greement no.
	=	Couleur no.
36	=	Mordant

NL

Symbolen	=	Tuigage Nr.
	=	Kleur Nr.
36	=	Beits

E

Símbolo	=	Oparejo Nr.
	=	Color Nr.
36	=	Mordiente

I

Segno	=	Attrezzatura No
	=	Colore No
36	=	Inchiostro tint.

P

Simbolos	=	Cordame no
	=	Cõr no
36	=	Tintura

Til denne model er mahogni bejdse og farver med følgende numre nødvendige:
For this model is mahogany stain and colours with the following numbers should be used:
Für dieses Modell sind Mahagoni Beize und Farben mit den folgenden Nummern notwendig:
Pour ce modèle, le mordant et les couleurs avec les numéros suivants doivent être employées:
Voor dit model zijn kleuren met de volgende nummers nodig:
Para est modelo se necesitan mordiente et colores con los siguientes nùmeros:
Per questo modello occorrono inchiostro tinteggiatore "mogano" e colori con questi numeri:
Pinte o modelo com tintura cõr Mogno e as cõres sugeridas da Billing Boats:

Farve Skema / Color Chart

Billing	1	=	White
Billing	3	=	Emerald
Billing	5	=	Tan
Billing	6	=	Hull red
Billing	11	=	Black
Billing	13	=	Trainer Yellow
Billing	13-1	=	Trainer Yellow + White (13+1)
Billing	16 (15)	=	Gold
Billing	17	=	Clear Poly
Billing	30	=	Dark Ad Grey
Billing	35	=	Signal Red
Billing	36	=	Bejdse/Stain/Beize /MordantBeize/Mordient

Fig.1

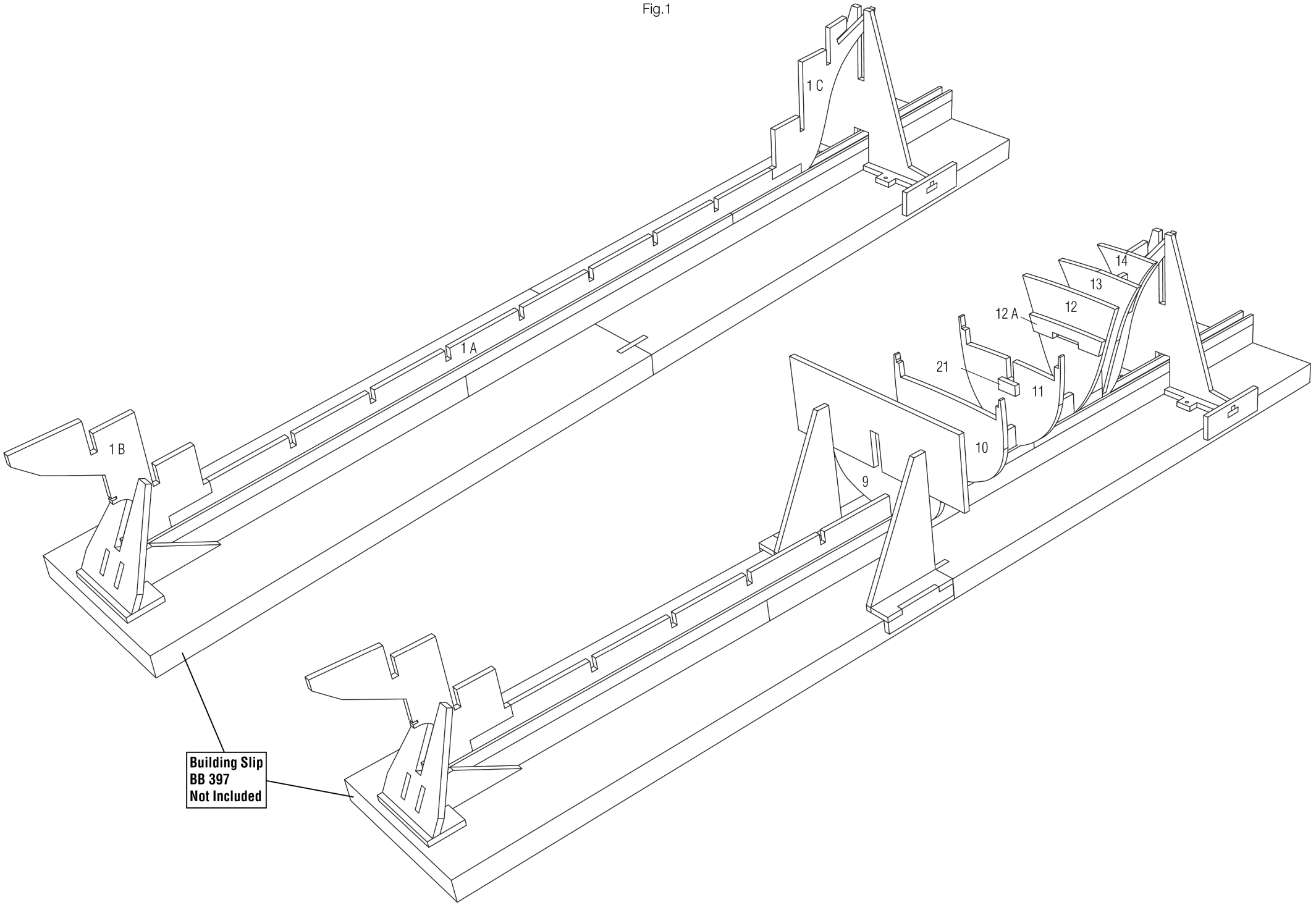
1 C
1 A
1 B
14
13
12
12 A
21
11
10
9
Building Slip
BB 397
Not Included

Fig.2

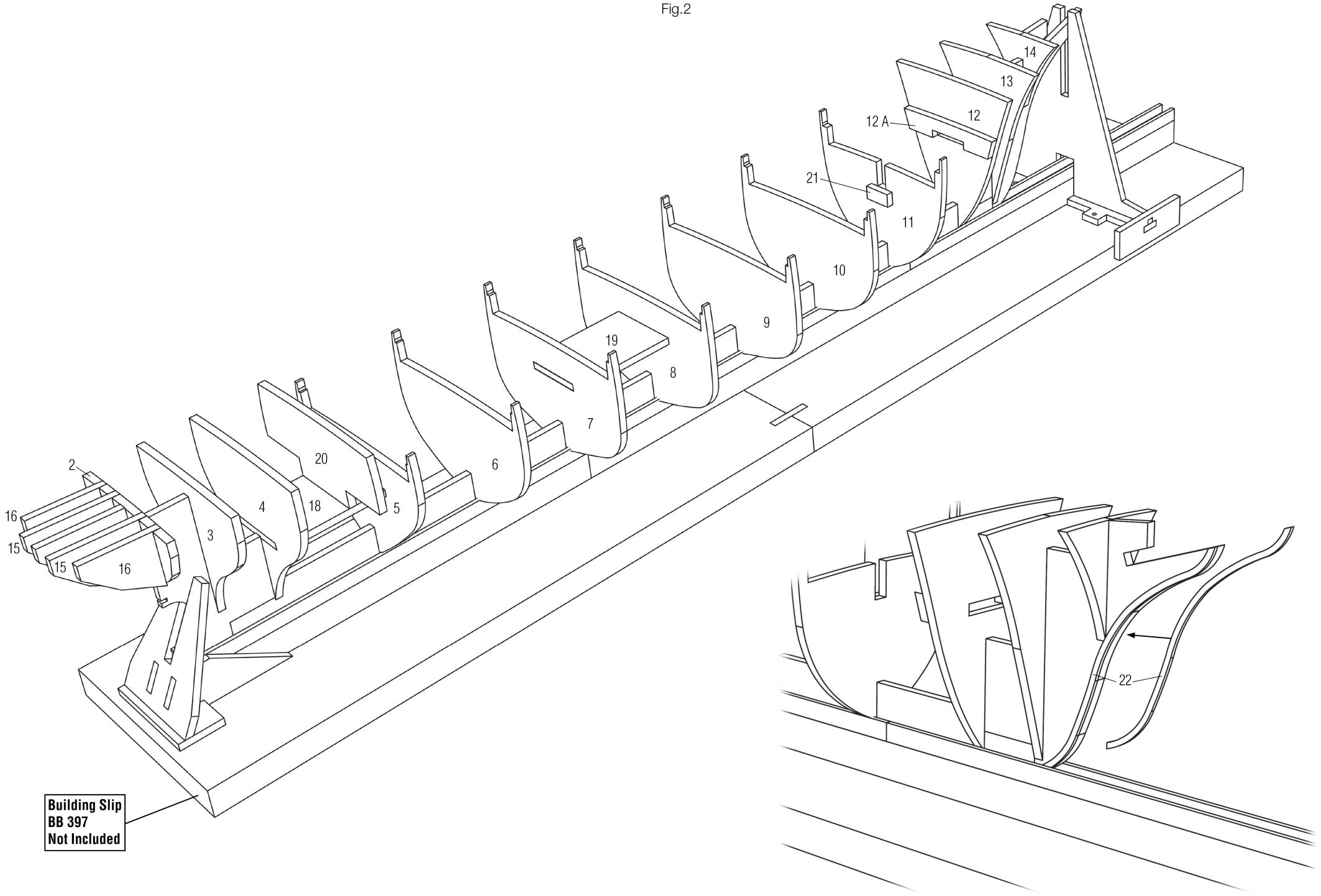
14
13
12
12 A
21
11
10
9
19
8
7
6
20
2
16
15
4
18
5
3
15
16
22
Building Slip
BB 397
Not Included

Fig.3

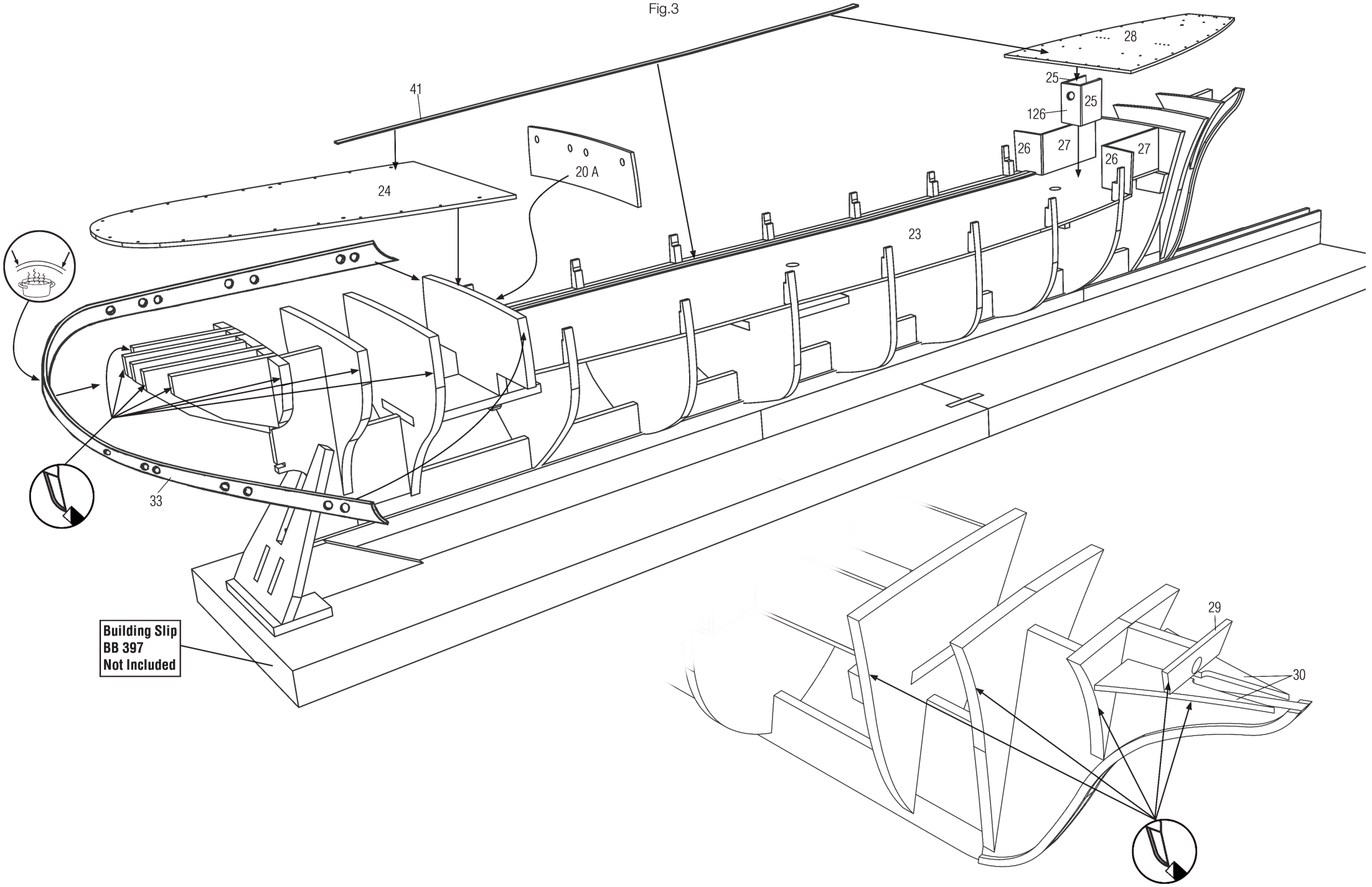
41
28
25
25
126
26
27
27
26
20 A
24
23
33
Building Slip
BB 397
Not Included
29
30

Fig.4

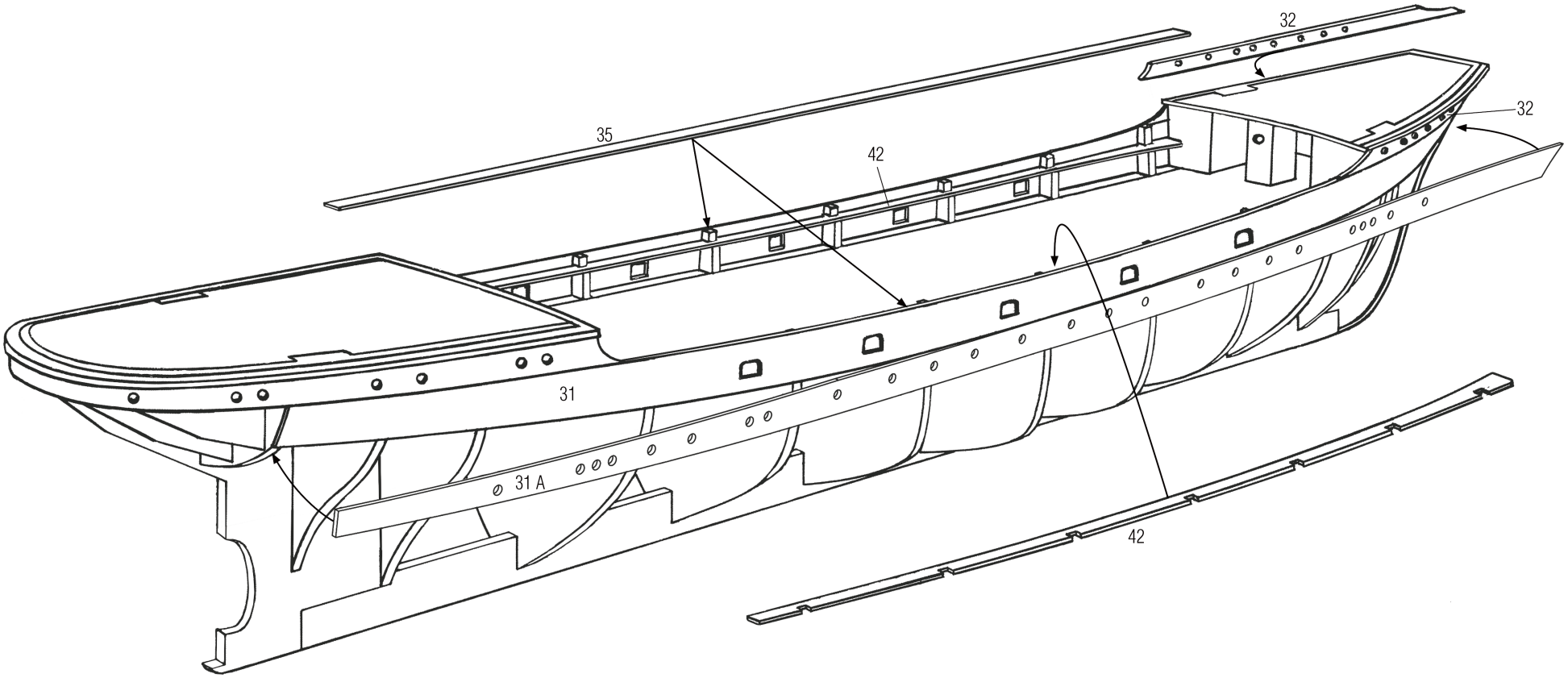

Fig.5

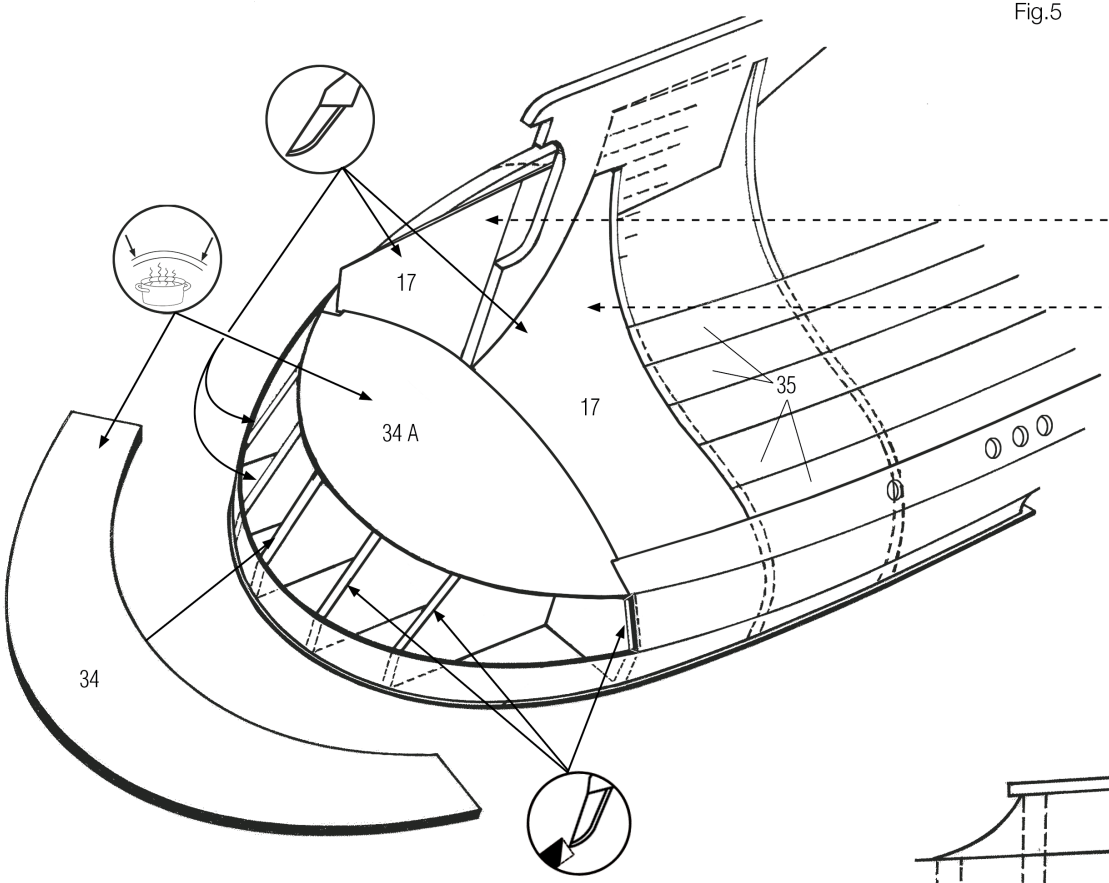

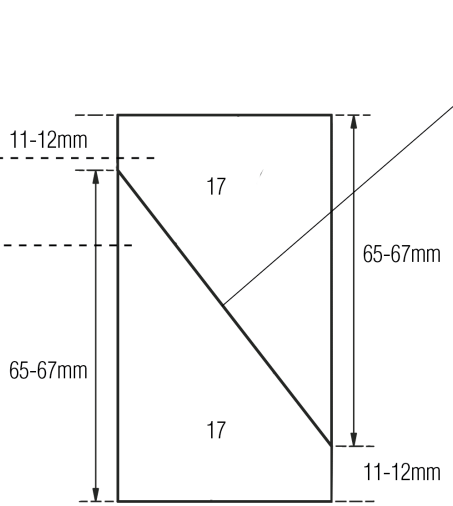

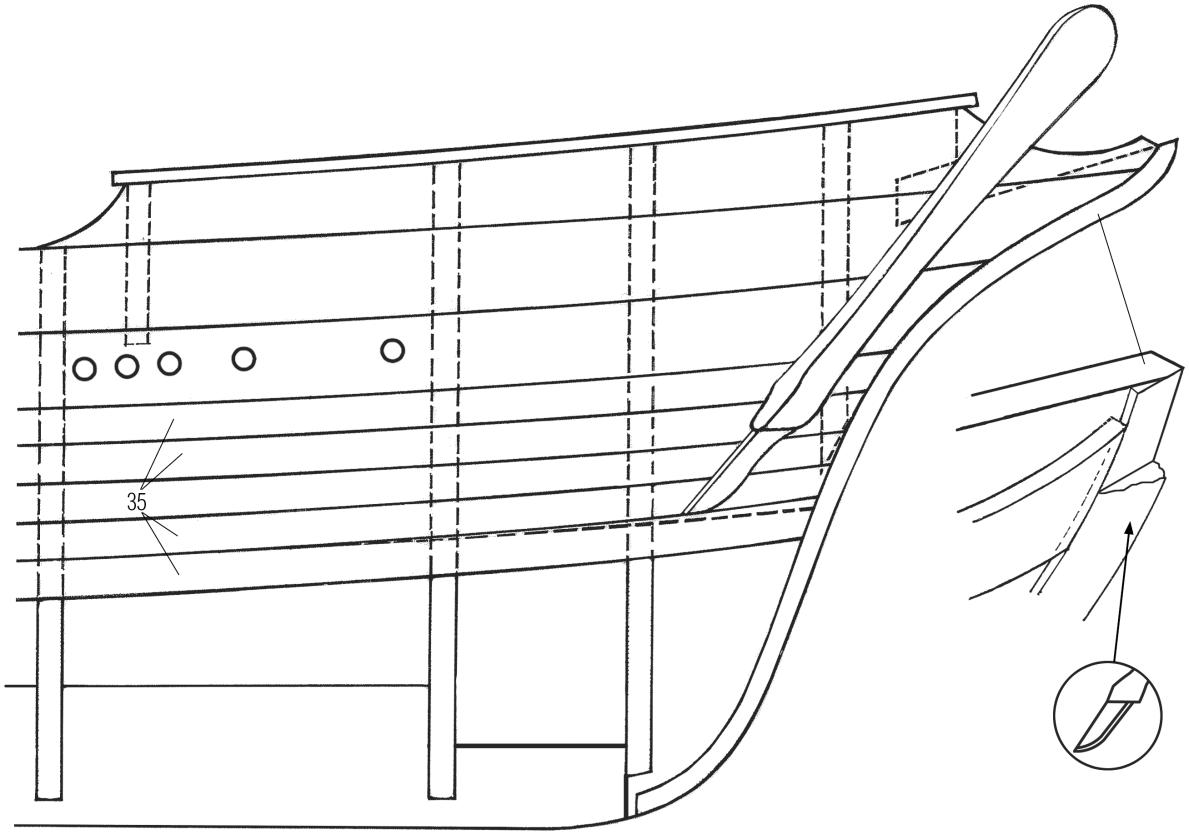

Fig.6

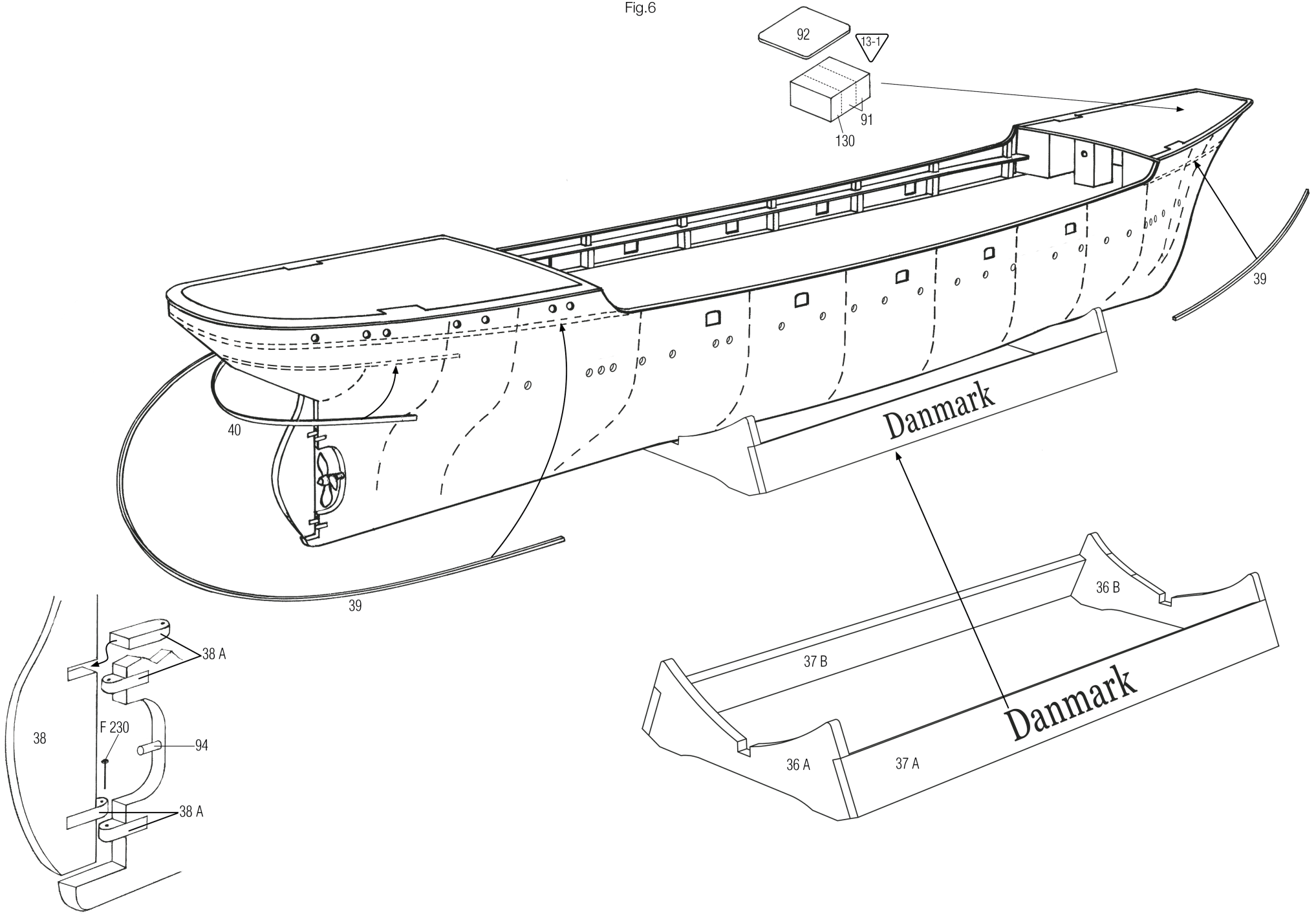
92
13-1
91
130
39
40
Danmark
39
36 B
37 B
Danmark
36 A
37 A
38 A
38
F 230
94
38 A

Fig.7

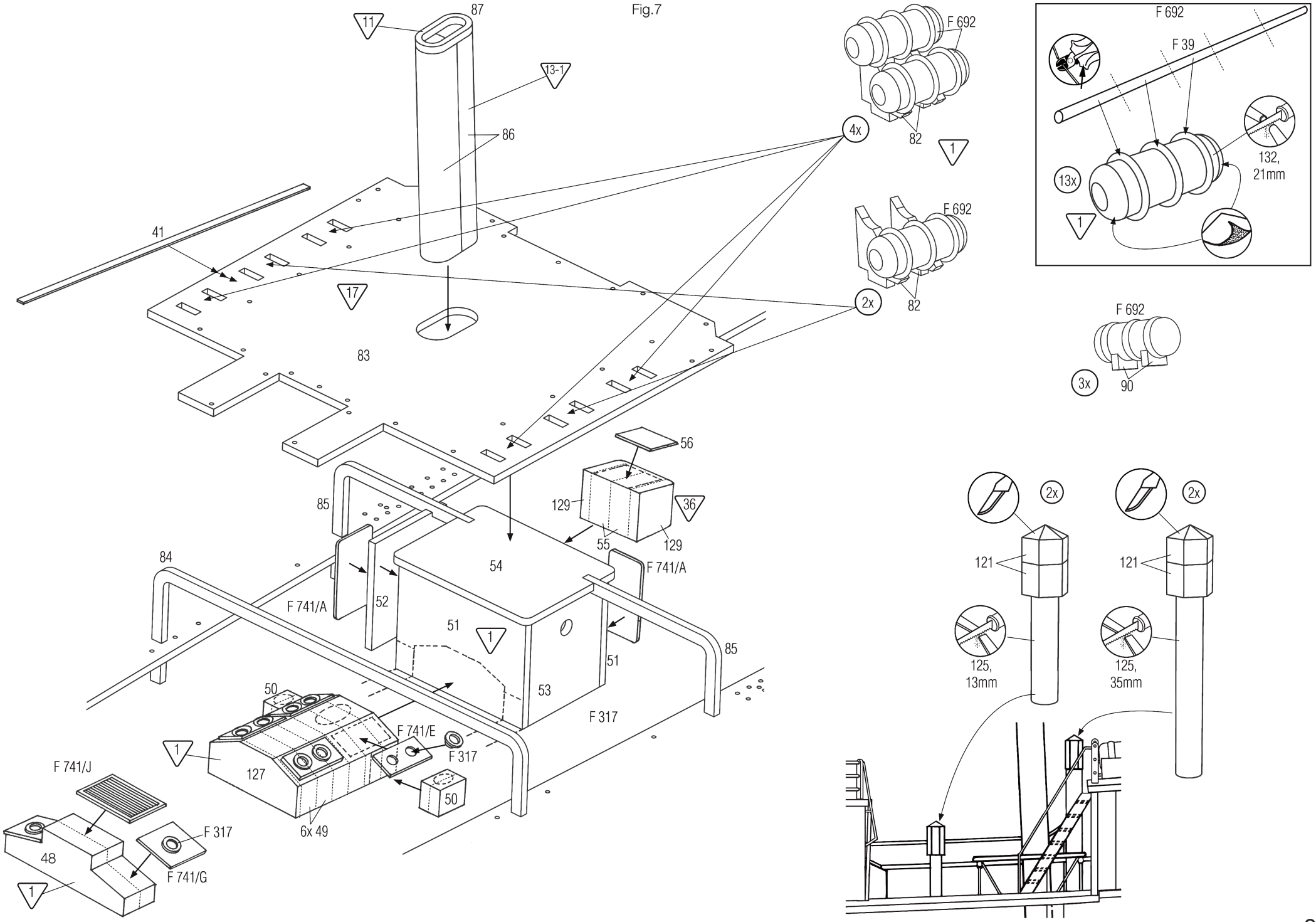
87
11
13-1
86
41
17
83
F 692
4x
82
1
F 692
2x
82
F 692
F 39
132,
21mm
13x
1
F 692
3x
90
56
129
36
55
129
85
84
54
F 741/A
F 741/A
52
51
1
85
51
53
F 317
50
F 741/E
F 317
1
127
50
6x 49
F 741/J
F 317
48
F 741/G
1
2x
121
125,
13mm
2x
121
125,
35mm

Fig.8

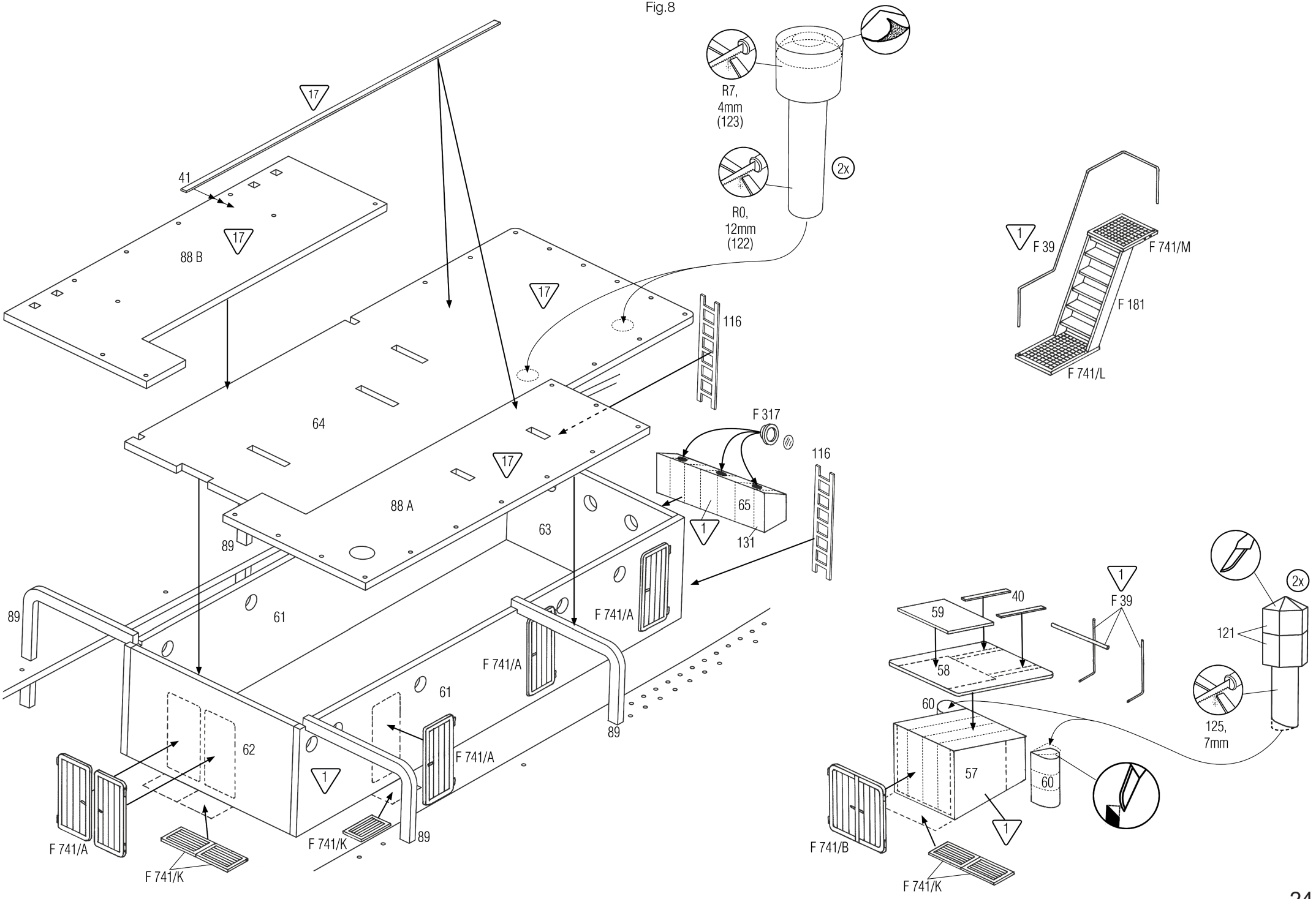
17
41
17
88 B
R7,
4mm
(123)
2x
R0,
12mm
(122)
17
116
64
F 317
17
116
88 A
65
1
131
89
63
89
61
F 741/A
F 741/A
61
89
62
1
F 741/A
F 741/K
89
F 741/A
F 741/K
1
F 39
F 741/M
F 181
F 741/L
1
F 39
59
40
58
60
57
60
1
F 741/B
F 741/K
2x
121
125,
7mm

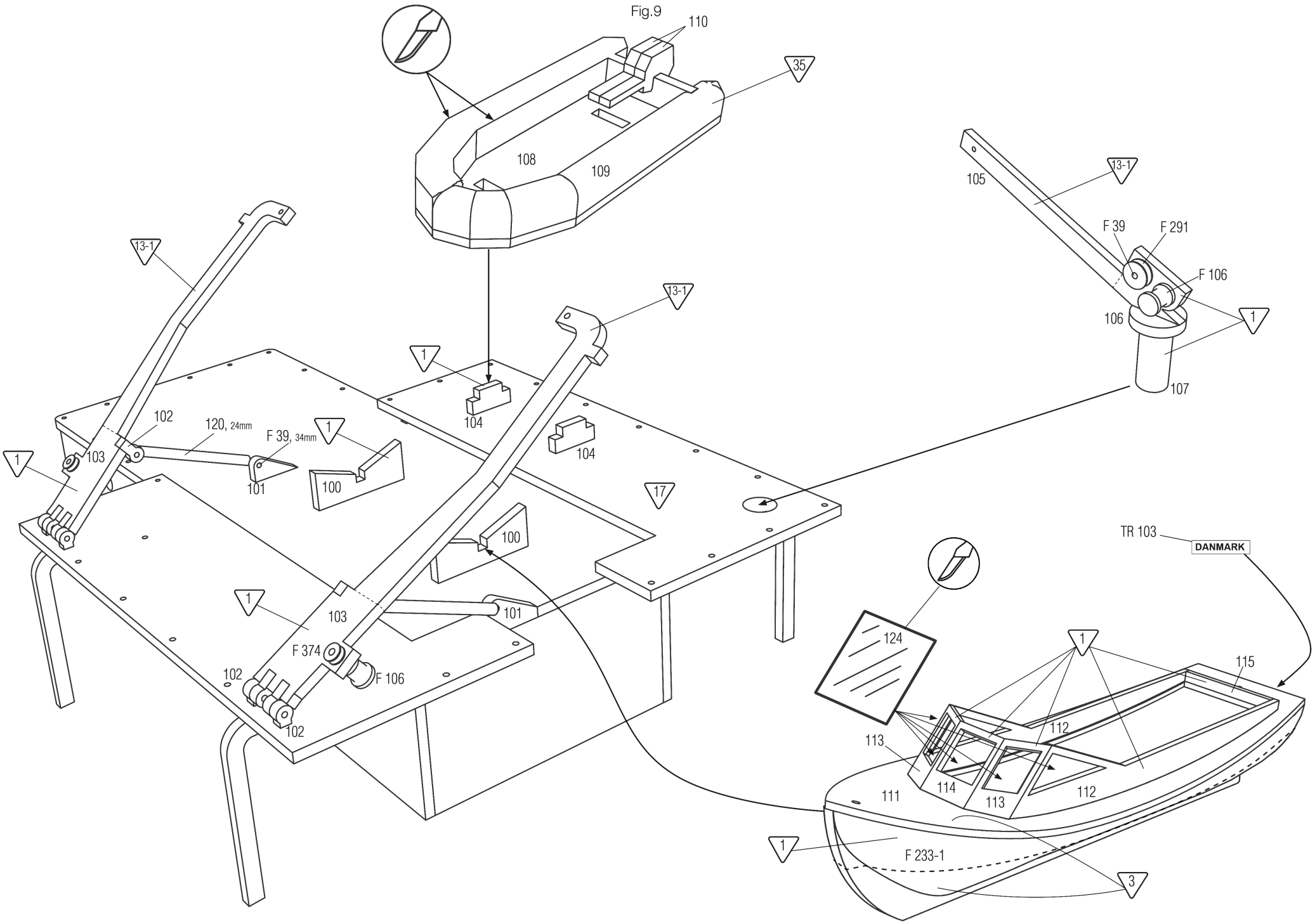
Fig.9
110
35
108
109
105
13-1
F 39
F 291
F 106
106
1
107
104
100
102
120, 24mm
F 39, 34mm
101
103
17
F 374
124
TR 103
DANMARK
115
112
113
111
114
F 233-1
3

Fig.10

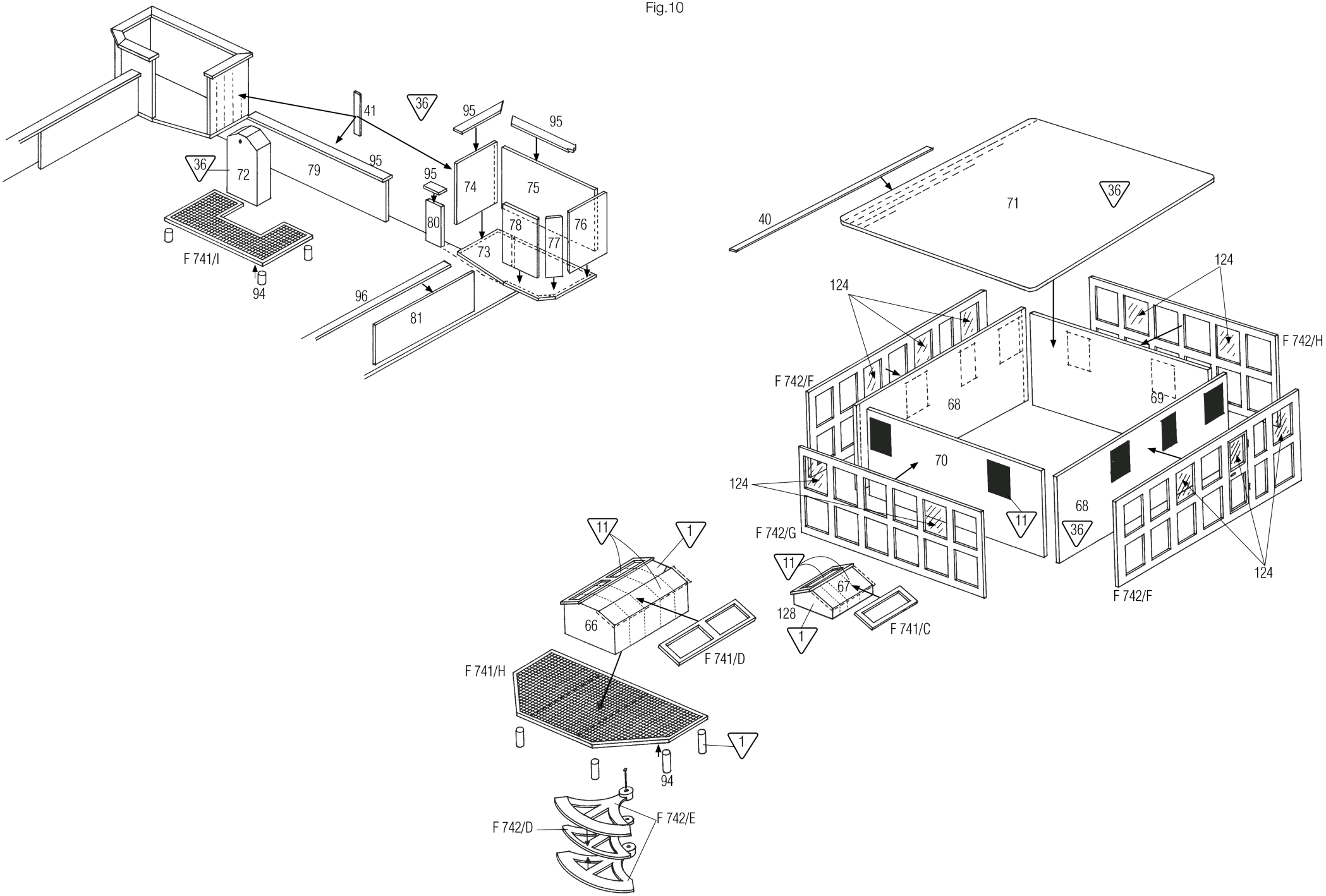
41
36
95
95
95
95
36
72
79
74
75
80
78
77
76
73
F 741/I
94
96
81
40
71
36
124
124
124
F 742/H
F 742/F
68
69
70
124
F 742/G
68
36
11
11
67
128
1
F 741/C
F 742/F
11
1
66
F 741/D
F 741/H
1
94
F 742/D
F 742/E

Fig.11

F 68

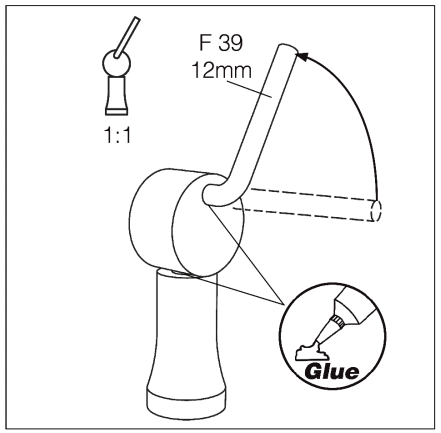

F 59

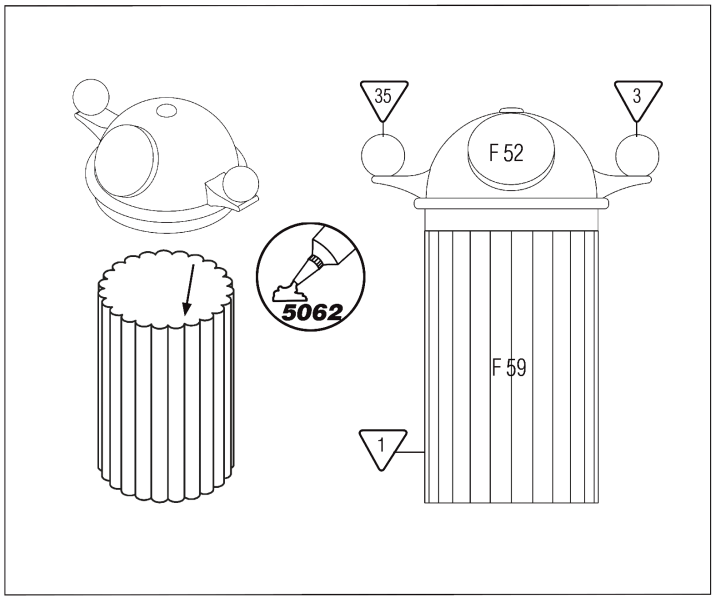

F 274

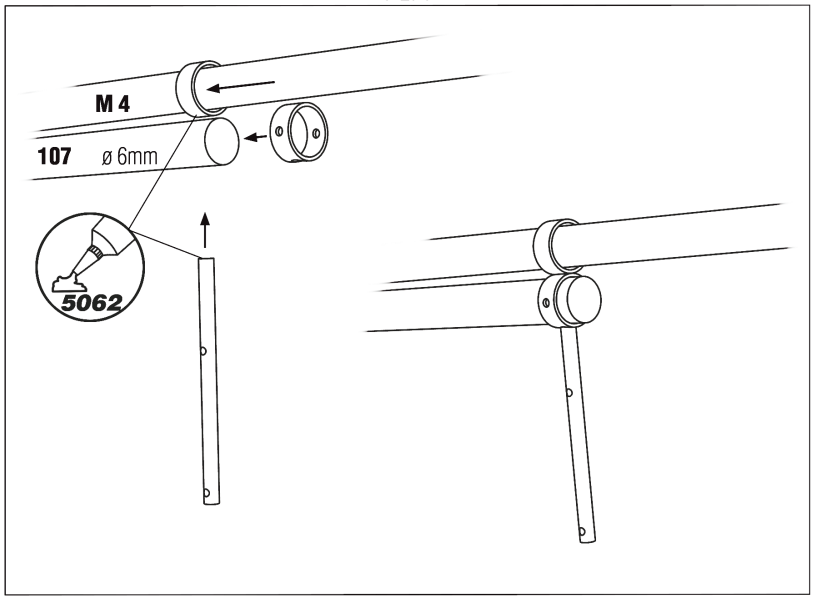

F 511

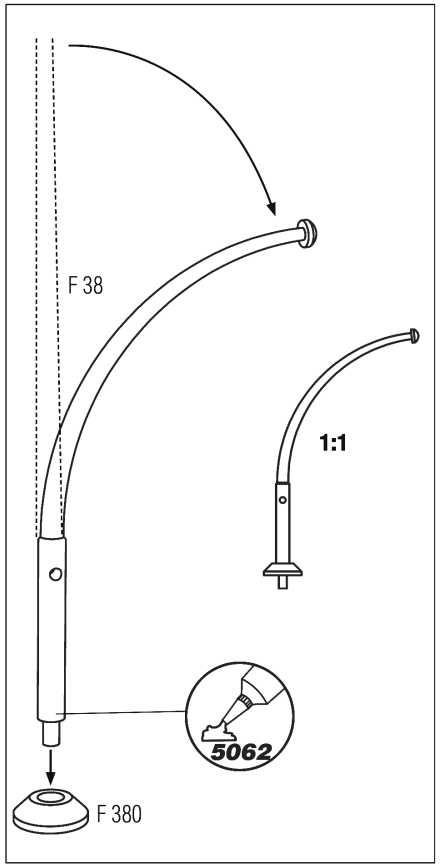

F 514

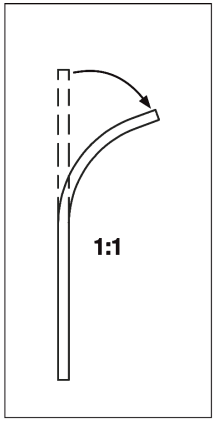

F 272

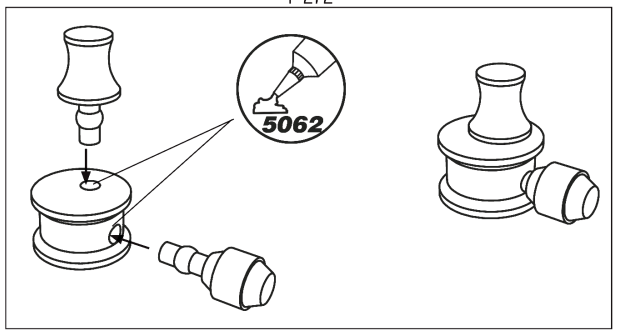

F 61

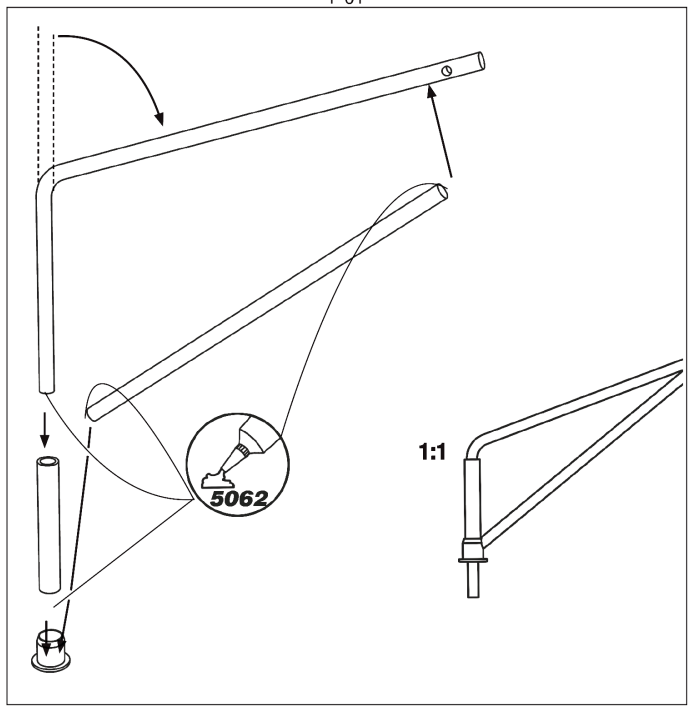

F 17

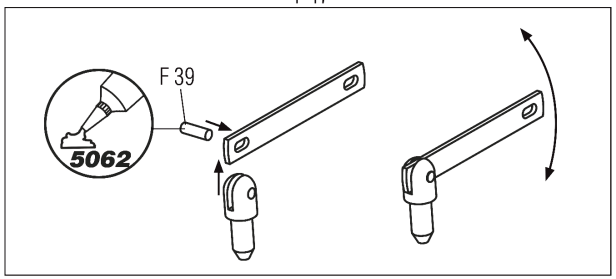


BILLING BOATS
DENMARK