Billing Boats® 701 FD 10 Yawl - Mast plan 50-50052-2

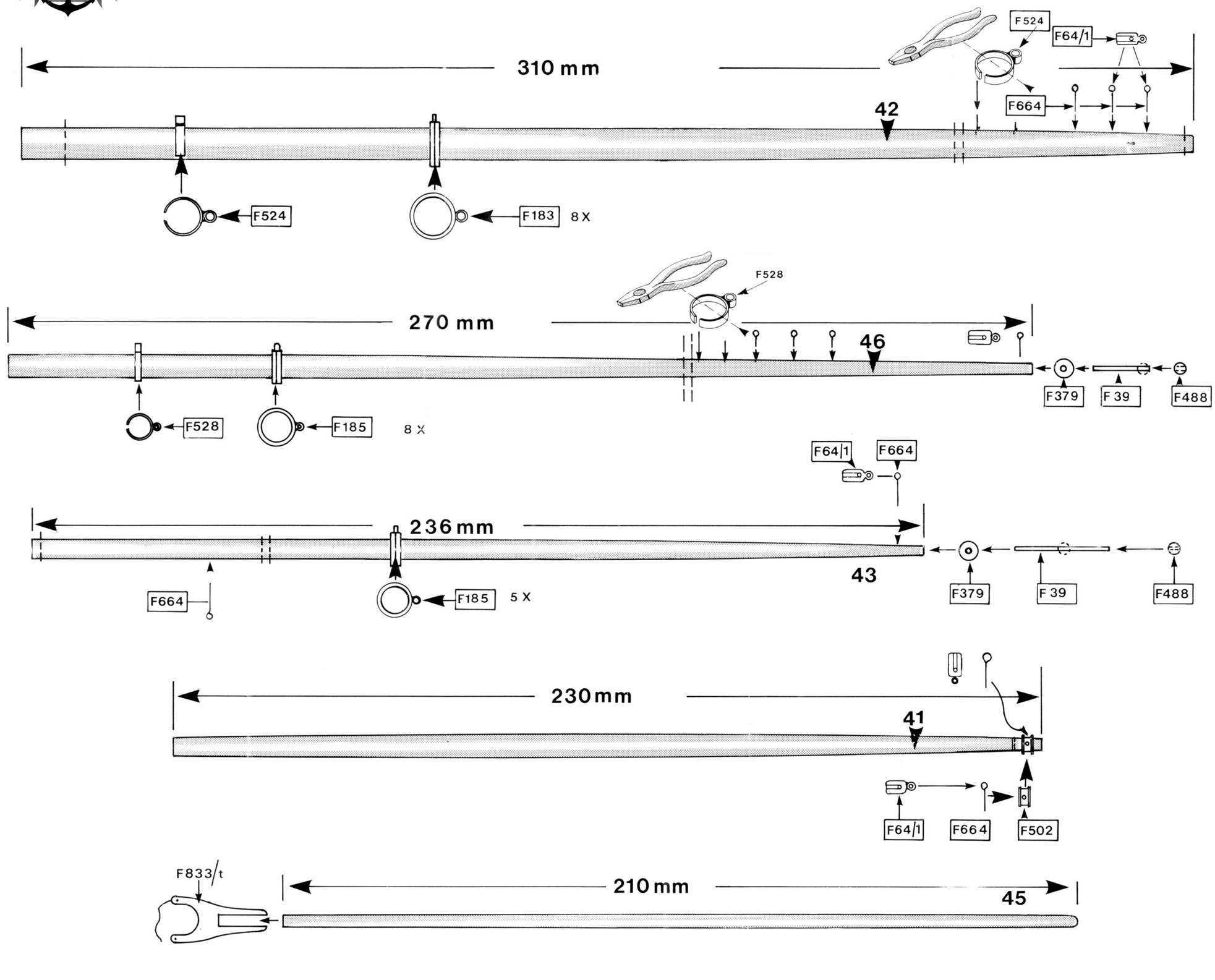

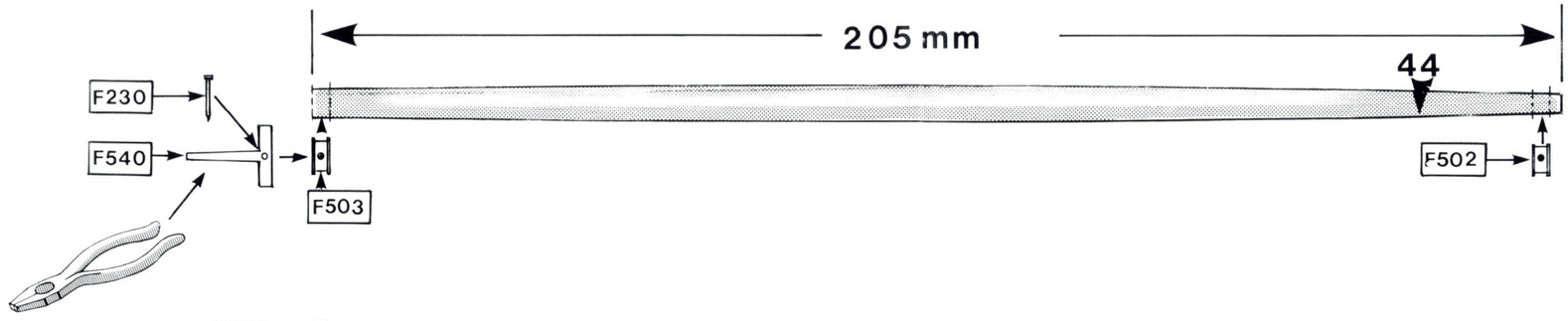
205 mm
44
F230
F540
F503
F502

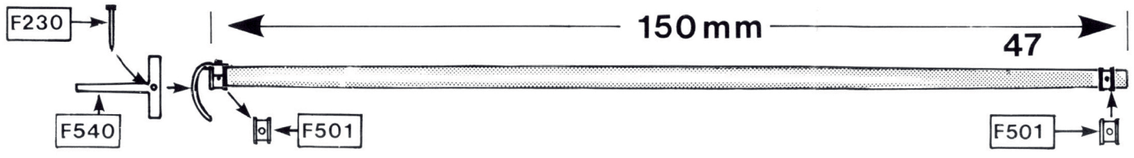
F230
150 mm
47
F540
F501
F501

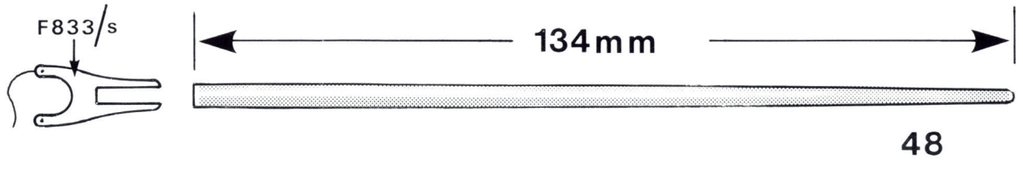
F833/s
134 mm
48

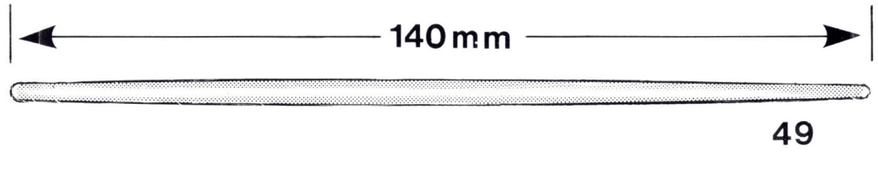
140 mm
49

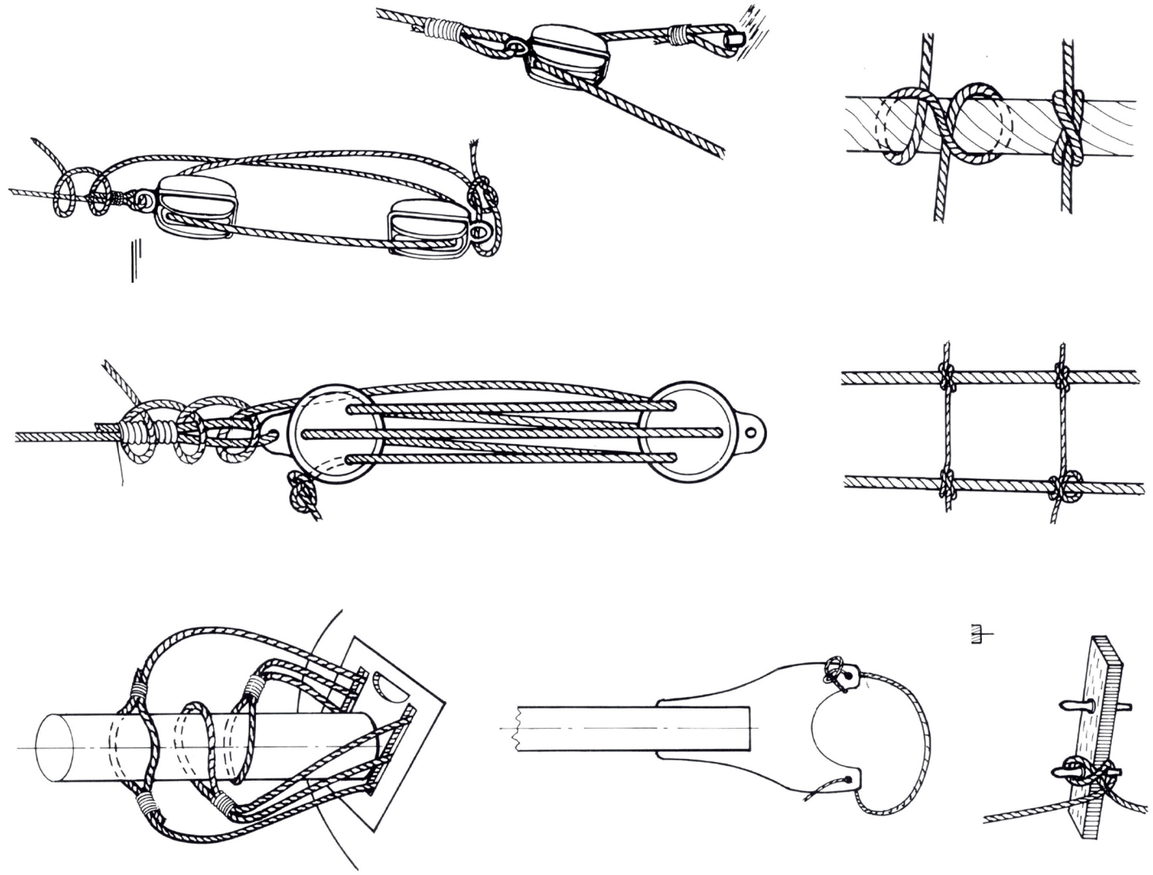

Billing Boats®

701 FD 10 Yawl

NOT IN SCALE

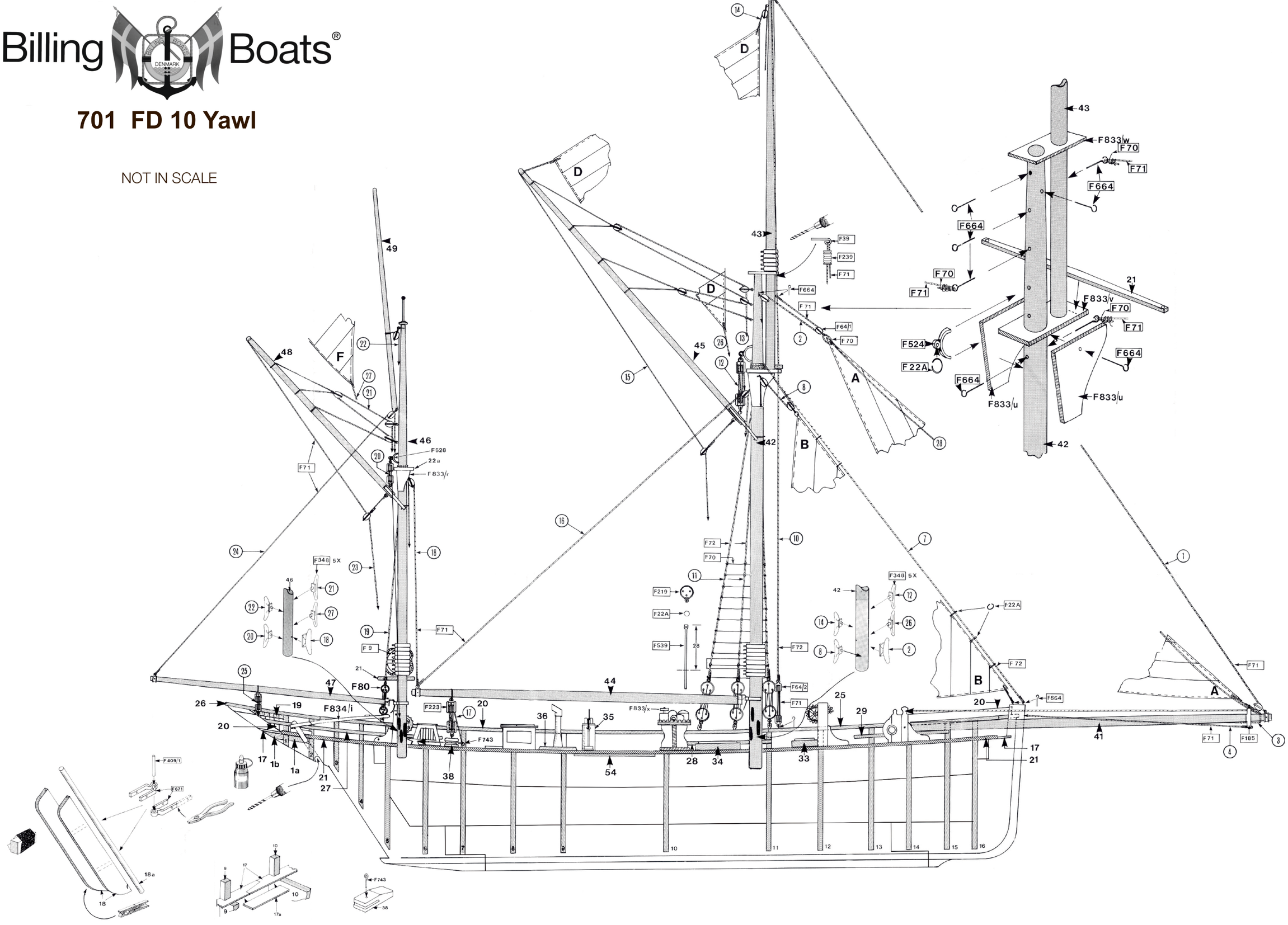

NOT IN SCALE

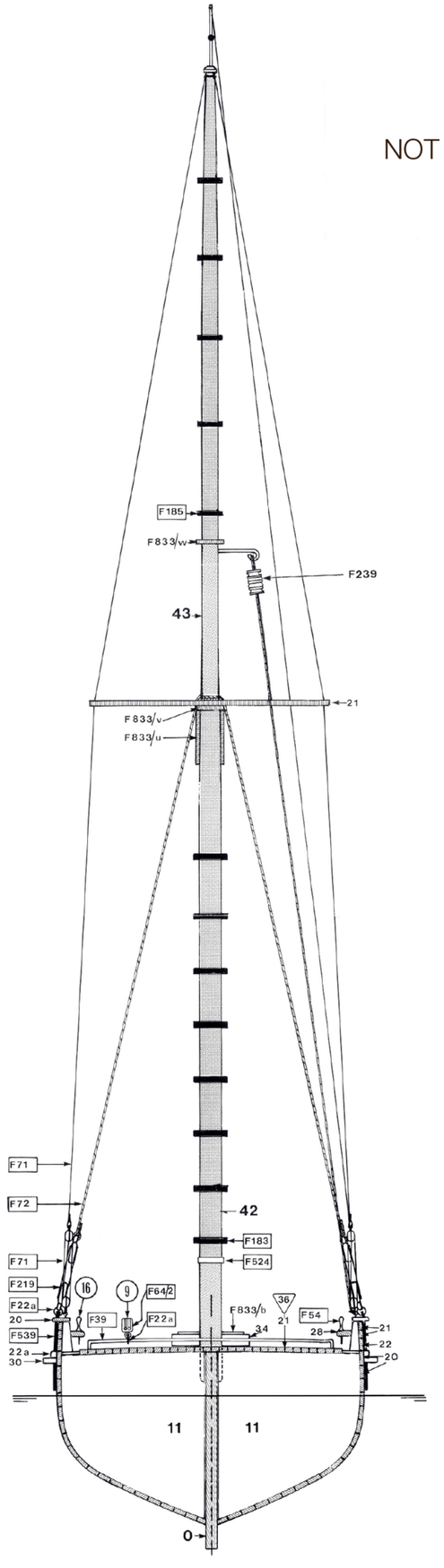
F185
F833/w
F239
43
21
F833/v
F833/u
F71
F72
42
F183
F524
F71
F219
16
g
F64/2
F22a
36
F833/b
F54
20
F539
F39
F22a
34
21
28
21
22a
22
30
20
11
11
0