Billing Boats®

U.S. COAST GUARD

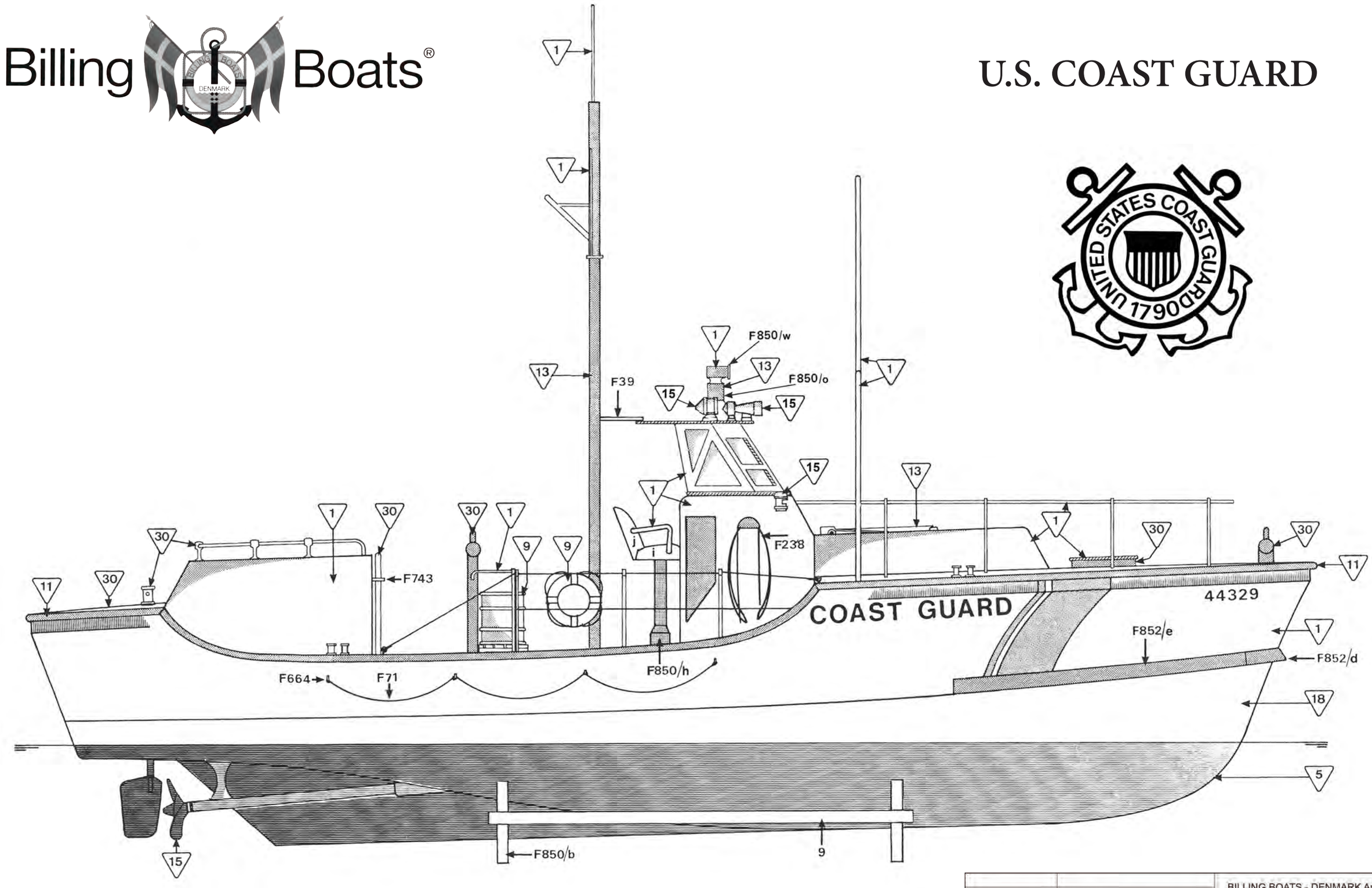

		BILLING BOATS - DENMARK Aps
Scale: 1:40	**U.S. COAST GUARD "100"** *General Drawing*	Drawing no. 50-50000

Billing Boats®

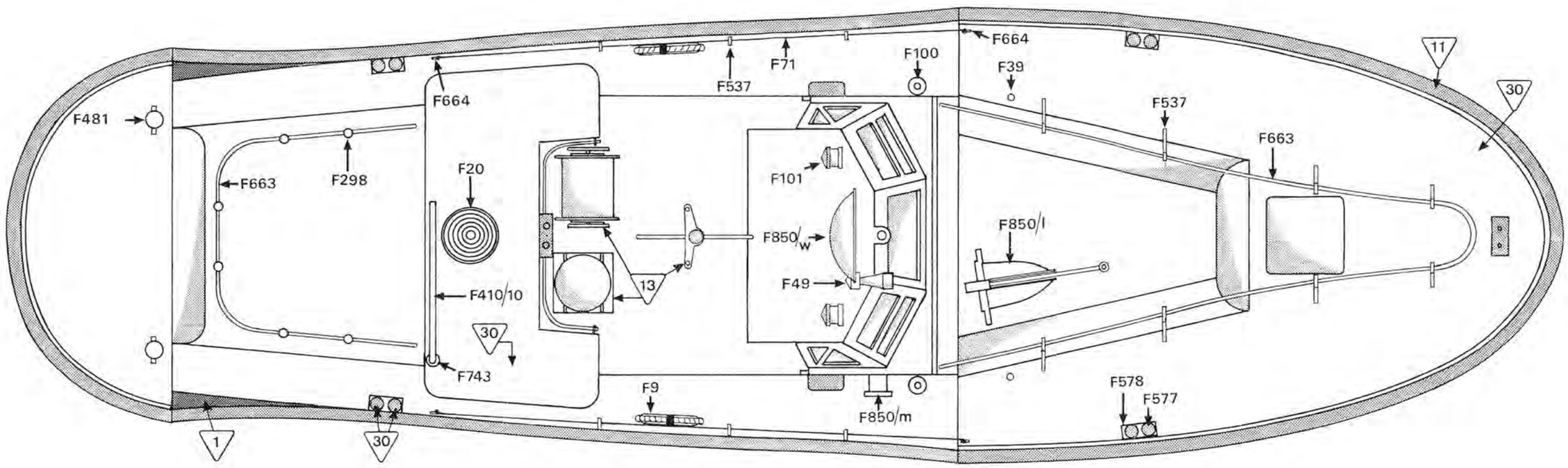

		BILLING BOATS - DENMARK Aps
Scale:	**U.S. COAST GUARD "100"**	Drawing no.
1:40	*General Drawing*	50-50000