Billing Boats®

HENRIETTE-MARIE

H2

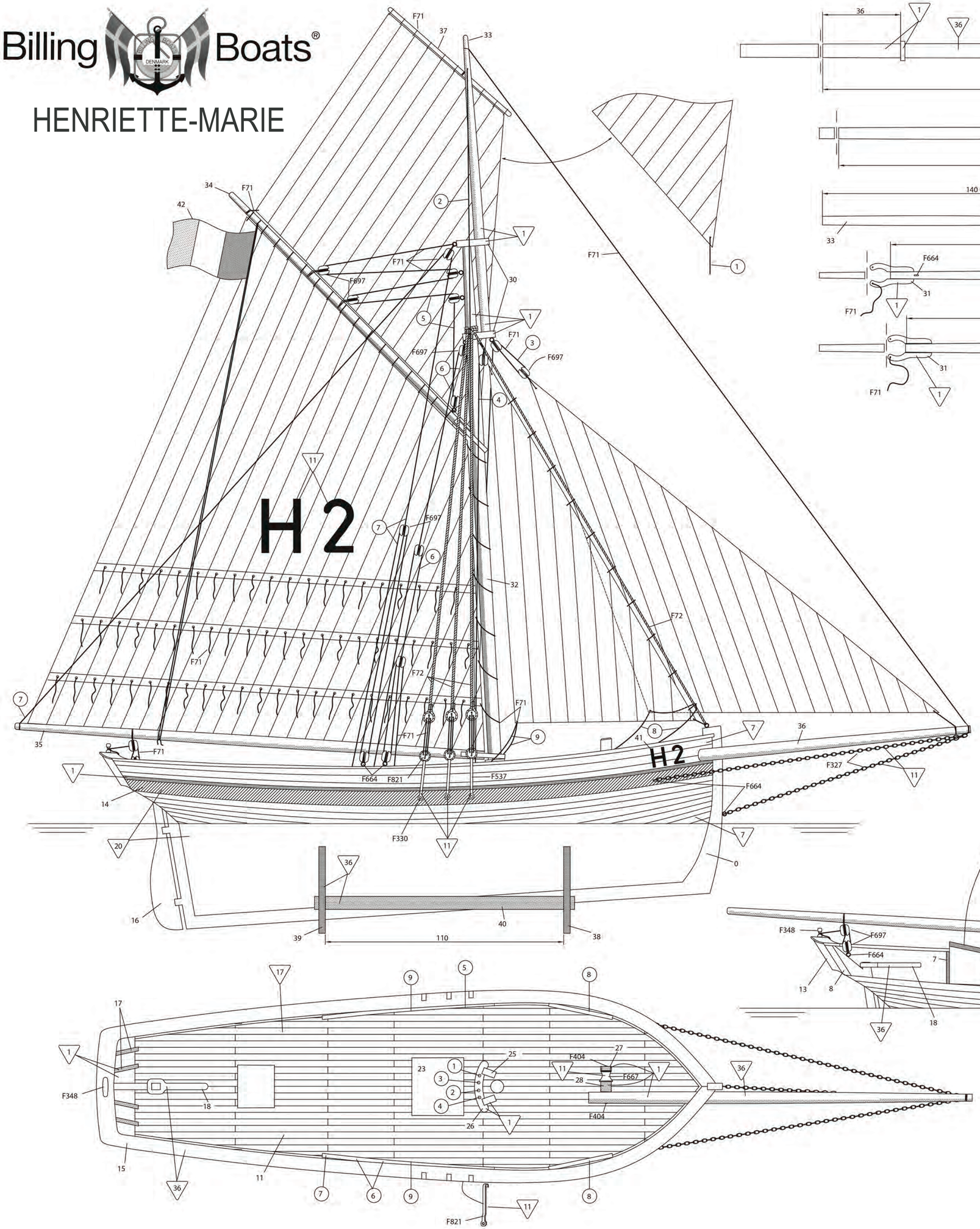

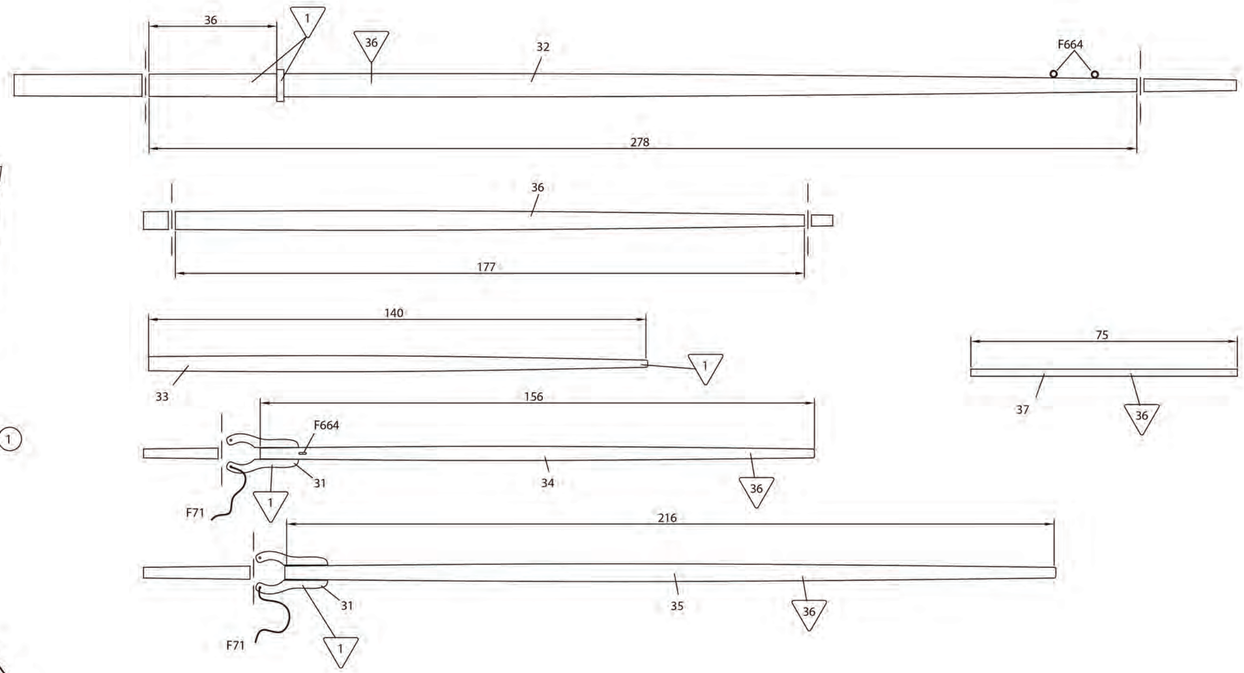



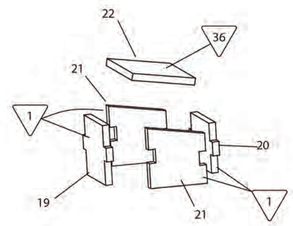

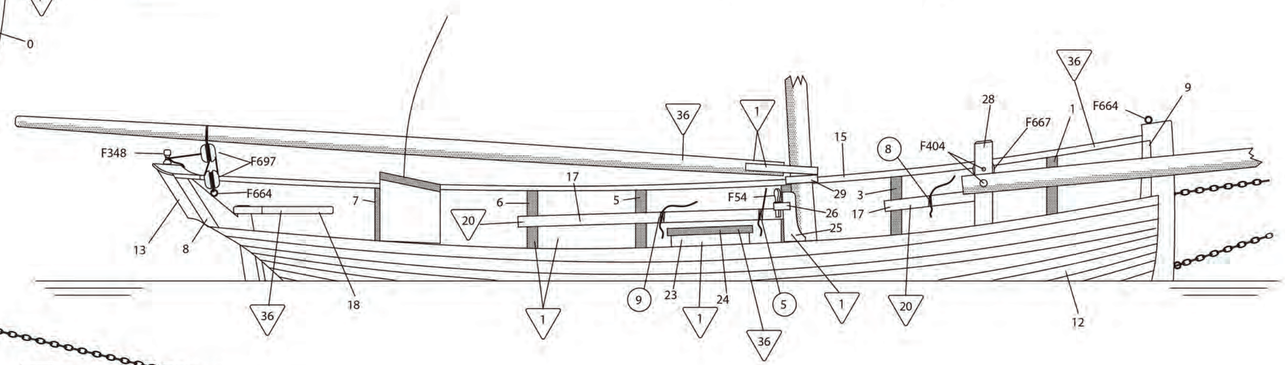

	8153-1	Billing Boats Denmark Aps
Scale: 1:50	HENRIETTE-MARIE ”904”	Tegn nr. 50-50068