# Esmeralda ”730” **




BUILDING INSTRUCTION

This model is Copyright protected
All Copyrights to the designs of this version of the Esmeralda belongs to Billing Boats Denmark Aps

## DK

Esmeralda er en firemastet skonnert, også kaldet "Barkentine", der blev søsat i 1952 i Cadiz/Spanien under navnet "Juan de Austria". Senere blev den solgt til den chilenske marine og fik navnet "Esmeralda". Navnet afslører en hel del om selve skibet, Esmeralda = Smaragd, der er en ægte ædelsten. Skibet sejler idag som skoleskib og med 3673 tons Depl. og er dermed en af de største.
Den 116 m lange Esmeralda sejler hovedsageligt i pasifiske farvande og er derfor i europæiske havne næsten ukendt.

## GB

Esmeralda is a four-masted schooner, or "Barkentine", 116m in length. Initially launched in Cadiz, Spain, in 1952 under the name "Juan de Austria", The vessel was later sold to the Chilean navy and renamed "Esmeralda" - a name which tells its own story. Esmeralda means emerald, a precious gem. Today, the schooner sals as a training ship, with a deplacement of 3673 tons. It sails mainly in Pacific waters and is therefore not well known in European ports.

## D

Der Viermastschoner (Barkentine) wurde unter dem Namen "Juan de Austria" 1952 für spanische Eigner in Cadiz/Span. gebaut. Später an die chilenische Marine verkauft und auf den Namen "Esmeralda" umgetauft. Der Name sagt alles "Esmeralda" = Smaragd, sie ist wirklich ein Edelstein unter den heute noch im Dienst stehenden Segelschulschiffe und mit 3673 tons Depl. ein grosser Brocken. Die 116m lange "Esmeralda" ist hauptsächlich im pazifischen Raum eingesetzt und deshalb in europäischen Gewässern fast unbekannt.

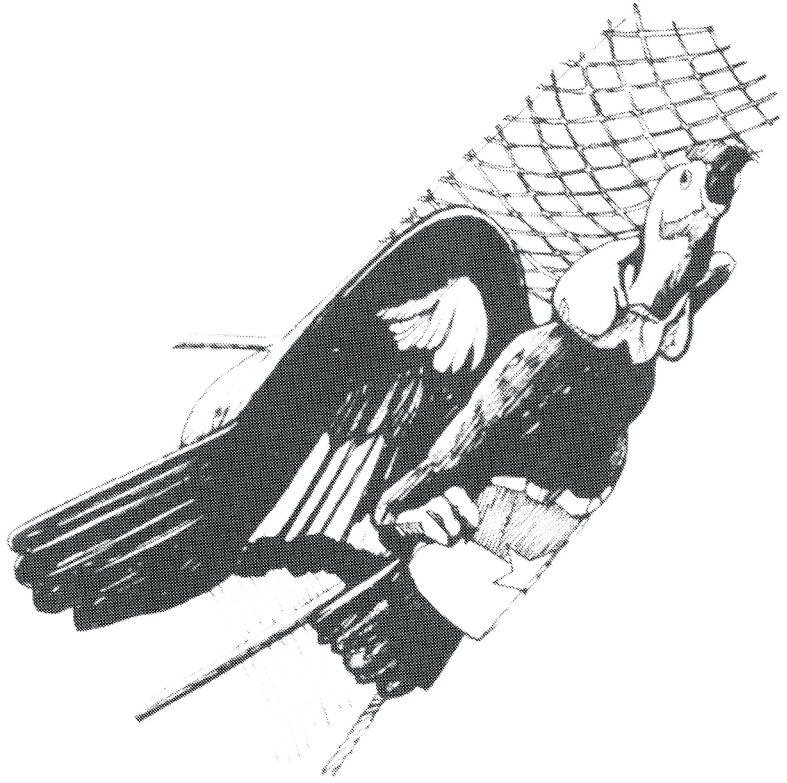

## E

L'Esmeralda est une goëlette, ou brigantin, à quatre mats de 116 mètres de long. Originalement lancé à Cadix en Espagne en 1952, sous le nom de "Juan de Austria", le navire fut ensuite vendu à la marine chilienne qui le rebaptisa "Esmeralda", un nom qui évoque toute son histoire. "Esmeralda" voulant dire "Emeraude", pierre précieuse qu'il transporta longtemps.
Aujourd'hui, la goëlette sert de navire d'entraînement de 3763 tonnes de déplacement. Elle navigue principalement dans le Pacifique, raison pour laquelle, elle n'est pas très connue dans les ports européens.

## NL

De Esmeralda is een viermast-schoener of "barkguentine" met een lengte van 116m. Het schip werd in 1952 onder de naam "Juan de Austria" in Cadiz/Spanje te water gelaten, later aan de Chileense marine verkocht en omgedoopt tot "Esmeralda".
Die naam zegt eigenlijk alles, want "Esmeralda" betekent smaragd. Met haar 3673 ton waterverplaatsing en 116 meter lengte is het dan ook een echte edelsteen onder de tot op heden nog operationele opleidingszeilschepen. De "Esmeralda" vaart voornamelijk in de wateren van de Pacific en is daarom in de Europesche wateren vrijwel onbekend.

| Psc. | No. | Dimension | Material | Found in | DK | GB | D | F |
|---|---|---|---|---|---|---|---|---|
| 1 | 1 | 4 mm x-veneér | 3284L | LAS | Køl | Keel | Kiel | Quille |
| 1 | 2 | 4 mm x-veneér | 3285L | LAS | Køl | Keel | Kiel | Quille |
| 1 | 3 | 4 mm x-veneér | 3284L | LAS | Køl | Keel | Kiel | Quille |
| 1 | 4 | 4 mm x-veneér | 3284L | LAS | Spante | Frame | Spant | Couple |
| 1 | 5 | 4 mm x-veneér | 3285L | LAS | Spante | Frame | Spant | Couple |
| 1 | 6 | 4 mm x-veneér | 3285L | LAS | Spante | Frame | Spant | Couple |
| 1 | 7 | 4 mm x-veneér | 3284L | LAS | Spante | Frame | Spant | Couple |
| 1 | 8 | 4 mm x-veneér | 3285L | LAS | Spante | Frame | Spant | Couple |
| 1 | 9 | 4 mm x-veneér | 3285L | LAS | Spante | Frame | Spant | Couple |
| 1 | 10 | 4 mm x-veneér | 3285L | LAS | Spante | Frame | Spant | Couple |
| 1 | 11 | 4 mm x-veneér | 3285L | LAS | Spante | Frame | Spant | Couple |
| 1 | 12 | 4 mm x-veneér | 3284L | LAS | Spante | Frame | Spant | Couple |
| 1 | 13 | 4 mm x-veneér | 3284L | LAS | Spante | Frame | Spant | Couple |
| 1 | 14 | 4 mm x-veneér | 3284L | LAS | Spante | Frame | Spant | Couple |
| 1 | 15 | 4 mm x-veneér | 3284L | LAS | Spante | Frame | Spant | Couple |
| 1 | 16 | 4 mm x-veneér | 3285L | LAS | Hjælpestykke | Auxiliary piece | Hilfsstück | Pièce annexe |
| 1 | 17 | 4 mm x-veneér | 3285L | LAS | Hjælpestykke | Auxiliary piece | Hilfsstück | Pièce annexe |
| 1 | 18 | 4 mm x-veneér | 3285L | LAS | Hjælpestykke | Auxiliary piece | Hilfsstück | Pièce annexe |
| 1 | 19 | 2 mm x-veneér | 3281L | LAS | Dæk | Deck | Deck | Pont |
| 2 | 20 | 2 mm x-veneér | 3281L | LAS | Kahyt | Cabin | Kajüte | Cabine |
| 1 | 21 | 2 mm x-veneér | 3281L | LAS | Kahyt | Cabin | Kajüte | Cabine |
| 1 | 22 | 2 mm x-veneér | 3281L | LAS | Kahyt | Cabin | Kajüte | Cabine |
| 1 | 23 | 2 mm x-veneér | 3281L | LAS | Skot | Bulkhead | Schott | Cloison |
| 2 | 24 | 2 mm x-veneér | 3281L | LAS | Kahyt | Cabin | Kajüte | Cabine |
| 1 | 25 | 2 mm x-veneér | 3281L | LAS | Kahyt | Cabin | Kajüte | Cabine |
| 2 | 26 | 2 mm x-veneér | 3280L | LAS | Kahyt | Cabin | Kajüte | Cabine |
| 2 | 27 | 2 mm x-veneér | 3280L | LAS | Kahyt | Cabin | Kajüte | Cabine |
| 2 | 28 | 4 mm x-veneér | 3284L | LAS | Hjælpespant | Auxiliary frame | Hilfsspant | Couples |
| 2 | 29 | 4 mm x-veneér | 3284L | LAS | Hjælpespant | Auxiliary frame | Hilfsspant | Couples |
| 1 | 30 | 2 mm x-veneér | 3280L | LAS | Dæk | Deck | Deck | Pont |
| 1 | 31 | 2 mm x-veneér | 3280L | LAS | Dæk | Deck | Deck | Pont |
| 1 | 32 | 2 mm x-veneér | 3280L | LAS | Hjælpestykke | Auxiliary piece | Hilfsstück | Pièce annexe |
| 2 | 33 | 2 mm x-veneér | 3280L | LAS | Hjælpestykke | Auxiliary piece | Hilfsstück | Pièce annexe |
| 2 | 34 | 2 mm x-veneér | 3280L | LAS | Ræling | Railing | Reling | Bastingage |
| 2 | 35 | 2 mm x-veneér | 3280L | LAS | Ræling | Railing | Reling | Bastingage |
| 2 | 36 | 2 mm x-veneér | 3280L | LAS | Ræling | Railing | Reling | Bastingage |
| 2 | 37 | 2 mm x-veneér | 3282L | LAS | Beklædningsliste | Plankingstrip | Beplankungsleiste | Bandes de bordage |
| 1 | 38 | 1 mm x-veneér | 3279L | LAS | Faconstykke | Formed piece | Formteil | Piece formée |
| 2 | 39 | 2 mm x-veneér | 3282L | LAS | Beklædningsliste | Plankingstrip | Beplankungsleiste | Bandes de bordage |

| Psc. | No. | Dimension | Material | Found in | DK | GB | D | F |
|---|---|---|---|---|---|---|---|---|
| 1 | 40 | 1 mm x-veneér | 3279L | LAS | Faconstykke | Formed piece | Formteil | Piece formée |
| 1 | 41 | 1 mm x-veneér | 3279L | LAS | Faconstykke | Formed piece | Formteil | Piece formée |
| 2 | 42 | 4 mm x-veneér | 3284L | LAS | Hjælpestykke | Auxiliary piece | Hilfsstück | Pièce annexe |
| 2 | 43 | 4 mm x-veneér | 3284L | LAS | Hjælpestykke | Auxiliary piece | Hilfsstück | Pièce annexe |
| 1 | 44 | 4 mm x-veneér | 3284L | LAS | Hjælpestykke | Auxiliary piece | Hilfsstück | Pièce annexe |
| 2 | 45 | 2 mm x-veneér | 3282L | LAS | Beklædningsliste | Plankingstrip | Beplankungsleiste | Bandes de bordage |
| 2 | 46 | 2 mm x-veneér | 3282L | LAS | Beklædningsliste | Plankingstrip | Beplankungsleiste | Bandes de bordage |
| 1 | 47 | 4 mm x-veneér | 3284L | LAS | Ror | Rudder | Ruder | Gouvernail |
| 1 | 48 | 4 mm x-veneér | 3284L | LAS | Ror | Rudder | Ruder | Gouvernail |
| 8 | 49 | 3 mm x-veneér | 3283L | LAS | Liste | Strip | Leiste | Baguette |
| 2 | 50 | 2 mm x-veneér | 3280L | LAS | Liste | Strip | Leiste | Baguette |
| 2 | 51 | 1 mm x-veneér | 3279L | LAS | Støtte | Support | Stützen | Support |
| 1 | 52 | 2 mm x-veneér | 3281L | LAS | Dæk | Deck | Deck | Pont |
| 1 | 53 | 2 mm x-veneér | 3280L | LAS | Kahyt | Cabin | Kajüte | Cabine |
| 2 | 54 | 2 mm x-veneér | 3280L | LAS | Kahyt | Cabin | Kajüte | Cabine |
| 1 | 55 | 2 mm x-veneér | 3280L | LAS | Kahyt | Cabin | Kajüte | Cabine |
| 2 | 56 | 1 mm x-veneér | 3279L | LAS | Kahyt | Cabin | Kajüte | Cabine |
| 2 | 57 | 1 mm x-veneér | 3279L | LAS | Kahyt | Cabin | Kajüte | Cabine |
| 2 | 58 | 1 mm x-veneér | 3279L | LAS | Kahyt | Cabin | Kajüte | Cabine |
| 1 | 59 | 2 mm x-veneér | 3281L | LAS | Kahyt | Cabin | Kajüte | Cabine |
| 2 | 60 | 1 mm x-veneér | 3279L | LAS | Kahyt | Cabin | Kajüte | Cabine |
| 1 | 61 | 1 mm x-veneér | 3279L | LAS | Kahyt | Cabin | Kajüte | Cabine |
| 1 | 62 | 1 mm x-veneér | 3279L | LAS | Kahyt | Cabin | Kajüte | Cabine |
| 1 | 63 | 1 mm x-veneér | 3279L | LAS | Kahyt | Cabin | Kajüte | Cabine |
| 2 | 64 | 1 mm x-veneér | 3279L | LAS | Kahyt | Cabin | Kajüte | Cabine |
| 1 | 65 | 1 mm x-veneér | 3279L | LAS | Tag | Roof | Dach | Toit |
| 1 | 66 | 1 mm x-veneér | 3279L | LAS | Kahyt | Cabin | Kajüte | Cabine |
| 2 | 67 | 1 mm x-veneér | 3279L | LAS | Styrehus | Wheel house | Steuerhaus | Timonerie |
| 2 | 68 | 1 mm x-veneér | 3279L | LAS | Styrehus | Wheel house | Steuerhaus | Timonerie |
| 1 | 69 | 1 mm x-veneér | 3279L | LAS | Tag | Roof | Dach | Toit |
| 2 | 70 | 1 mm x-veneér | 3279L | LAS | Ræling | Railing | Reling | Bastingage |
| 2 | 71 | 1 mm x-veneér | 3279L | LAS | Ræling | Railing | Reling | Bastingage |
| 2 | 72 | 1 mm x-veneér | 3279L | LAS | Ræling | Railing | Reling | Bastingage |
| 2 | 73 | 2 mm x-veneér | 3281L | LAS | Støtte | Support | Stützen | Support |
| 4 | 74 | 5 mm x-veneér | 3286L | LAS | Skylight | Skylight | Oberlicht | Claire-voie |
| 2 | 75 | 4 mm x-veneér | 3284L | LAS | Skylight | Skylight | Oberlicht | Claire-voie |
| 4 | 76 | 1 mm x-veneér | 3279L | LAS | Skylight | Skylight | Oberlicht | Claire-voie |
| 8 | 77 | 5 mm x-veneér | 3286L | LAS | Skylight | Skylight | Oberlicht | Claire-voie |
| 6 | 78 | 1 mm x-veneér | 3279L | LAS | Skylight | Skylight | Oberlicht | Claire-voie |

| Psc. | No. | Dimension | Material | Found in | DK | GB | D | F |
|---|---|---|---|---|---|---|---|---|
| 11 | 79 | 4 mm x-veneér | 3285L | LAS | Skylight | Skylight | Oberlicht | Claire-voie |
| 2 | 80 | 2 mm x-veneér | 3281L | LAS | Skylight | Skylight | Oberlicht | Claire-voie |
| 6 | 81 | 4 mm x-veneér | 3285L | LAS | Skylight | Skylight | Oberlicht | Claire-voie |
| 8 | 82 | 1 mm x-veneér | 3279L | LAS | Skylight | Skylight | Oberlicht | Claire-voie |
| 4 | 83 | 1 mm x-veneér | 3279L | LAS | Skylight | Skylight | Oberlicht | Claire-voie |
| 2 | 84 | 1 mm x-veneér | 3279L | LAS | Skylight | Skylight | Oberlicht | Claire-voie |
| 2 | 85 | 5 mm x-veneér | 3286L | LAS | Skylight | Skylight | Oberlicht | Claire-voie |
| 1 | 86 | 1 mm x-veneér | 3279L | LAS | Skylight | Skylight | Oberlicht | Claire-voie |
| 4 | 87 | 1 mm x-veneér | 3279L | LAS | Skylight | Skylight | Oberlicht | Claire-voie |
| 1 | 88 | 4 mm x-veneér | 3284L | LAS | Skylight | Skylight | Oberlicht | Claire-voie |
| 9 | 89 | 4 mm x-veneér | 3285L | LAS | Skylight | Skylight | Oberlicht | Claire-voie |
| 6 | 90 | 5 mm x-veneér | 3286L | LAS | Skylight | Skylight | Oberlicht | Claire-voie |
| 6 | 91 | 1 mm x-veneér | 3279L | LAS | Skylight | Skylight | Oberlicht | Claire-voie |
| 2 | 92 | 1 mm x-veneér | 3279L | LAS | Skylight | Skylight | Oberlicht | Claire-voie |
| 1 | 93 | 3 mm x-veneér | 3283L | LAS | Skylight | Skylight | Oberlicht | Claire-voie |
| 1 | 94 | 1 mm x-veneér | 3279L | LAS | Skylight | Skylight | Oberlicht | Claire-voie |
| 2 | 95 | 1 mm x-veneér | 3279L | LAS | Skylight | Skylight | Oberlicht | Claire-voie |
| 1 | 96 | 4 mm x-veneér | 3284L | LAS | Skylight | Skylight | Oberlicht | Claire-voie |
| 1 | 97 | 1 mm x-veneér | 3279L | LAS | Skylight | Skylight | Oberlicht | Claire-voie |
| 14 | 98 | 4 mm x-veneér | 3285L | LAS | Skylight | Skylight | Oberlicht | Claire-voie |
| 4 | 99 | 1 mm x-veneér | 3279L | LAS | Skylight | Skylight | Oberlicht | Claire-voie |
| 4 | 100 | 1 mm x-veneér | 3279L | LAS | Skylight | Skylight | Oberlicht | Claire-voie |
| 2 | 101 | 1 mm x-veneér | 3279L | LAS | Skylight | Skylight | Oberlicht | Claire-voie |
| 1 | 102 | 1 mm x-veneér | 3279L | LAS | Faconstykke | Formed piece | Formteil | Piece formée |
| 1 | 103 | 4 mm x-veneér | 3285L | LAS | Luge | Hatch | Luke | Ecoutille |
| 1 | 104 | 1 mm x-veneér | 3279L | LAS | Skylight | Skylight | Oberlicht | Claire-voie |
| 1 | 105 | 2 mm x-veneér | 3281L | LAS | Ankerspil | Anchor winch | Ankerklüse | Treuil d'ancre |
| 4 | 106 | 1 mm x-veneér | 3279L | LAS | Ankerspil | Anchor winch | Ankerklüse | Treuil d'ancre |
| 4 | 107 | 5 mm x-veneér | 3286L | LAS | Spil | Winch | Winde | Treuil |
| 4 | 108 | 2 mm x-veneér | 3280L | LAS | Spil | Winch | Winde | Treuil |
| 4 | 109 | 2 mm x-veneér | 3280L | LAS | David | Davit | Davit | Bossoir |
| 4 | 110 | 1 mm x-veneér | 3279L | LAS | Kofilnaglebænk | Belaying pin bench | Belegnägelbank | Ratelier de cordage |
| 4 | 111 | 1 mm x-veneér | 3279L | LAS | Kofilnaglebænk | Belaying pin bench | Belegnägelbank | Ratelier de cordage |
| 5 | 112 | 1 mm x-veneér | 3279L | LAS | Kofilnaglebænk | Belaying pin bench | Belegnägelbank | Ratelier de cordage |
| 21 | 113 | 1 mm x-veneér | 3279L | LAS | Kahytsdør | Cabin door | Kajütentür | Porte de cabine |
| 26 | 114 | 1 mm x-veneér | 3279L | LAS | Redningsflåde fod | Liferaft base | Rettungsinsel fuss | Radeau de sauvetage, pied |
| 8 | 115 | 1 mm x-veneér | 3279L | LAS | Lejder | Ladder | Leiter | Echelle |
| 5 | 116 | 1 mm x-veneér | 3279L | LAS | Lejder | Ladder | Leiter | Echelle |
| 10 | 117 | 2 mm x-veneér | 3281L | LAS | Gangbro | Gangway | Laufplanken | Passavant |

| Psc. | No. | Dimension | Material | Found in | DK | GB | D | F |
|---|---|---|---|---|---|---|---|---|
| 8 | 118 | 1 mm x-veneér | 3279L | LAS | Pullert-fundament | Bollard base | Pollertunterlage | Socle pour bitte |
| 4 | 119 | 2 mm x-veneér | 3280L | LAS | Kanon | Cannon | Kanon | Canon |
| 4 | 120 | 3 mm x-veneér | 3283L | LAS | Kanon | Cannon | Kanon | Canon |
| 6 | 121 | 1 mm x-veneér | 3279L | LAS | Luge | Hatch | Luke | Ecoutille |
| 4 | 122 | 2 mm x-veneér | 3281L | LAS | Mærs | Top | Mars | Hûne |
| 8 | 123 | 2 mm x-veneér | 3280L | LAS | Mærs | Top | Mars | Hûne |
| 3 | 124 | 2 mm x-veneér | 3280L | LAS | Bomgaffel | Boom fork | Boom Gabel | Fourche Boom |
| 2 | 125 | 1 mm x-veneér | 3279L | LAS | Redningsbåd | Lifeboat | Rettungsboot | Canot de sauvetage |
| 2 | 126 | 1 mm x-veneér | 3279L | LAS | Bedding | Bedding Slip | Helling | Cale de construction |
| 2 | 127 | 1 mm x-veneér | 3279L | LAS | Bedding | Bedding Slip | Helling | Cale de construction |
| 2 | 128 | 1 mm x-veneér | 3279L | LAS | Konsol | Bracket | Konsole | Console |
| 4 | 129 | 1 mm x-veneér | 3279L | LAS | Redningsbåd | Lifeboat | Rettungsboot | Canot de sauvetage |
| 4 | 130 | 2 mm x-veneér | 3281L | LAS | Mastebeslag | Mastfitting | Mastbeschlag | Garniture de mât |
| 1 | 131 | 4 mm x-veneér | 3284L | LAS | Bedding | Bedding Slip | Helling | Cale de construction |
| 1 | 132 | 4 mm x-veneér | 3284L | LAS | Bedding | Bedding Slip | Helling | Cale de construction |
| 1 | 133 | 4 mm x-veneér | 3285L | LAS | Bedding | Bedding Slip | Helling | Cale de construction |
| 1 | 134 | 4 mm x-veneér | 3285L | LAS | Bedding | Bedding Slip | Helling | Cale de construction |
| 1 | 135 | 1 mm x-veneér | 3279L | LAS | Bomhviler | Boom crutch | Baumstütze | Support de bóme |
| 10 | 136 | 0,7x1x550mm | Annegré | LB2 | Fenderliste | Rubbing strake | Fenderleiste | Bande de garde-boue |
| 1 | 137 | 0,7x2x550mm | Mahogany | LB2 | Liste | Strip | Leiste | Baguette |
| 100 | 138 | 0,7x2x550mm | Annegré | LB2 | Liste | Strip | Leiste | Baguette |
| 4 | 139 | 1,8x2x550mm | Abachi | LB2 | Liste | Strip | Leiste | Baguette |
| 45 | 140 | 1,8x7x740mm | Obechi | LB1 | Liste | Strip | Leiste | Baguette |
| 1 | 141 | ø6x60mm | Basswood | TS | Rundstok | Round stick | Rundstock | Baguette ronde |
| 4 | MS1+MS2+MS3 | ø8x330mm | Basswood | TS | Rundstok | Round stick | Rundstock | Baguette ronde |
| 6 | MS4+MS5+BM1 | ø5x250mm | Basswood | TS | Rundstok | Round stick | Rundstock | Baguette ronde |
| 1 | R1 | ø6x235mm | Basswood | TS | Rundstok | Round stick | Rundstock | Baguette ronde |
| 2 | BM2+BM3 | ø5x160mm | Basswood | TS | Rundstok | Round stick | Rundstock | Baguette ronde |
| 1 | R2 | ø4x225mm | Basswood | TS | Rundstok | Round stick | Rundstock | Baguette ronde |
| 4 | BM4+R3 | ø4x180mm | Basswood | TS | Rundstok | Round stick | Rundstock | Baguette ronde |
| 1 | R4 | ø3x120mm | Basswood | TS | Rundstok | Round stick | Rundstock | Baguette ronde |
| 1 | | 60x200mm | | VEJ | Net | Net | Netz | Filet |
| 1 | | A4 | | VEJ | Byggevejledning | Building instruction | Bauanleitung | Instruction de montage |
| 1 | | A3 | | VEJ | Masttegninger | Mast Drawings | Mast Zeichnungen | Mât Dessins |
| 1 | | TR 126 | | VEJ | Transfer | Transfer | Abziehbild | Decalcomanies |
| 1 | | FL 146 | | VEJ | Flag | Flag | Flagge | Drapeau |
| 1 | | | | VEJ | Tegning | Drawing | Zeichnung | Plan |
| 2 | | 50x55cm | | | Sejl | Sail | Segel | Voil |

| Psc. | No. | Dimension | Material | Found in | NL | E | I | P |
|---|---|---|---|---|---|---|---|---|
| 1 | 1 | 4 mm x-veneér | 3284L | LAS | Kiel | Quilla | Chiglia | Quilha |
| 1 | 2 | 4 mm x-veneér | 3285L | LAS | Kiel | Quilla | Chiglia | Quilha |
| 1 | 3 | 4 mm x-veneér | 3284L | LAS | Kiel | Quilla | Chiglia | Quilha |
| 1 | 4 | 4 mm x-veneér | 3284L | LAS | Spant | Cuaderna | Ordinata | Armação |
| 1 | 5 | 4 mm x-veneér | 3285L | LAS | Spant | Cuaderna | Ordinata | Armação |
| 1 | 6 | 4 mm x-veneér | 3285L | LAS | Spant | Cuaderna | Ordinata | Armação |
| 1 | 7 | 4 mm x-veneér | 3284L | LAS | Spant | Cuaderna | Ordinata | Armação |
| 1 | 8 | 4 mm x-veneér | 3285L | LAS | Spant | Cuaderna | Ordinata | Armação |
| 1 | 9 | 4 mm x-veneér | 3285L | LAS | Spant | Cuaderna | Ordinata | Armação |
| 1 | 10 | 4 mm x-veneér | 3285L | LAS | Spant | Cuaderna | Ordinata | Armação |
| 1 | 11 | 4 mm x-veneér | 3285L | LAS | Spant | Cuaderna | Ordinata | Armação |
| 1 | 12 | 4 mm x-veneér | 3284L | LAS | Spant | Cuaderna | Ordinata | Armação |
| 1 | 13 | 4 mm x-veneér | 3284L | LAS | Spant | Cuaderna | Ordinata | Armação |
| 1 | 14 | 4 mm x-veneér | 3284L | LAS | Spant | Cuaderna | Ordinata | Armação |
| 1 | 15 | 4 mm x-veneér | 3284L | LAS | Spant | Cuaderna | Ordinata | Armação |
| 1 | 16 | 4 mm x-veneér | 3285L | LAS | Hulpstukken | Pieza de ayuda | Pezzo ausiliario | Peça auxiliar |
| 1 | 17 | 4 mm x-veneér | 3285L | LAS | Hulpstukken | Pieza de ayuda | Pezzo ausiliario | Peça auxiliar |
| 1 | 18 | 4 mm x-veneér | 3285L | LAS | Hulpstukken | Pieza de ayuda | Pezzo ausiliario | Peça auxiliar |
| 1 | 19 | 2 mm x-veneér | 3281L | LAS | Dek | Cubierta | Ponte | Convés |
| 2 | 20 | 2 mm x-veneér | 3281L | LAS | Kajuit | Camarote | Cabina | Cabine |
| 1 | 21 | 2 mm x-veneér | 3281L | LAS | Kajuit | Camarote | Cabina | Cabine |
| 1 | 22 | 2 mm x-veneér | 3281L | LAS | Kajuit | Camarote | Cabina | Cabine |
| 1 | 23 | 2 mm x-veneér | 3281L | LAS | Schott | Mamparo | Paratía | Anteparo |
| 2 | 24 | 2 mm x-veneér | 3281L | LAS | Kajuit | Camarote | Cabina | Cabine |
| 1 | 25 | 2 mm x-veneér | 3281L | LAS | Kajuit | Camarote | Cabina | Cabine |
| 2 | 26 | 2 mm x-veneér | 3280L | LAS | Kajuit | Camarote | Cabina | Cabine |
| 2 | 27 | 2 mm x-veneér | 3280L | LAS | Kajuit | Camarote | Cabina | Cabine |
| 2 | 28 | 4 mm x-veneér | 3284L | LAS | Hulpspant | Cuaderna auxiliar | Ordinate ausiliari | Armação auxiliar |
| 2 | 29 | 4 mm x-veneér | 3284L | LAS | Hulpspant | Cuaderna auxiliar | Ordinate ausiliari | Armação auxiliar |
| 1 | 30 | 2 mm x-veneér | 3280L | LAS | Dek | Cubierta | Ponte | Convés |
| 1 | 31 | 2 mm x-veneér | 3280L | LAS | Dek | Cubierta | Ponte | Convés |
| 1 | 32 | 2 mm x-veneér | 3280L | LAS | Hulpstukken | Pieza de ayuda | Pezzo ausiliario | Peça auxiliar |
| 2 | 33 | 2 mm x-veneér | 3280L | LAS | Hulpstukken | Pieza de ayuda | Pezzo ausiliario | Peça auxiliar |
| 2 | 34 | 2 mm x-veneér | 3280L | LAS | Reling | Barrandilla | Parapetto di murata | Corrimão |
| 2 | 35 | 2 mm x-veneér | 3280L | LAS | Reling | Barrandilla | Parapetto di murata | Corrimão |
| 2 | 36 | 2 mm x-veneér | 3280L | LAS | Reling | Barrandilla | Parapetto di murata | Corrimão |
| 2 | 37 | 2 mm x-veneér | 3282L | LAS | Strip voor rompbeplanking | Listón de forro | Listelli fasciame | Tira de revestimento do casco |
| 1 | 38 | 1 mm x-veneér | 3279L | LAS | Gevormd deel | Pieza de forma | Pezzo prefabbricato | Peça pré-moldada |
| 2 | 39 | 2 mm x-veneér | 3282L | LAS | Strip voor rompbeplanking | Listón de forro | Listelli fasciame | Tira de revestimento do casco |

| Psc. | No. | Dimension | Material | Found in | NL | E | I | P |
|---|---|---|---|---|---|---|---|---|
| 1 | 40 | 1 mm x-veneér | 3279L | LAS | Gevormd deel | Pieza de forma | Pezzo prefabbricato | Peça pré-moldada |
| 1 | 41 | 1 mm x-veneér | 3279L | LAS | Gevormd deel | Pieza de forma | Pezzo prefabbricato | Peça pré-moldada |
| 2 | 42 | 4 mm x-veneér | 3284L | LAS | Hulpstukken | Pieza de ayuda | Pezzo ausiliario | Peça auxiliar |
| 2 | 43 | 4 mm x-veneér | 3284L | LAS | Hulpstukken | Pieza de ayuda | Pezzo ausiliario | Peça auxiliar |
| 1 | 44 | 4 mm x-veneér | 3284L | LAS | Hulpstukken | Pieza de ayuda | Pezzo ausiliario | Peça auxiliar |
| 2 | 45 | 2 mm x-veneér | 3282L | LAS | Strip voor rompbeplanking | Listón de forro | Listelli fasciame | Tira de revestimento do casco |
| 2 | 46 | 2 mm x-veneér | 3282L | LAS | Strip voor rompbeplanking | Listón de forro | Listelli fasciame | Tira de revestimento do casco |
| 1 | 47 | 4 mm x-veneér | 3284L | LAS | Roer | Timón | Timone | Leme |
| 1 | 48 | 4 mm x-veneér | 3284L | LAS | Roer | Timón | Timone | Leme |
| 8 | 49 | 3 mm x-veneér | 3283L | LAS | Strip | Listón | Listello | Tira |
| 2 | 50 | 2 mm x-veneér | 3280L | LAS | Strip | Listón | Listello | Tira |
| 2 | 51 | 1 mm x-veneér | 3279L | LAS | Steun | Soporte | Supporto | Suporte |
| 1 | 52 | 2 mm x-veneér | 3281L | LAS | Dek | Cubierta | Ponte | Convés |
| 1 | 53 | 2 mm x-veneér | 3280L | LAS | Kajuit | Camarote | Cabina | Cabine |
| 2 | 54 | 2 mm x-veneér | 3280L | LAS | Kajuit | Camarote | Cabina | Cabine |
| 1 | 55 | 2 mm x-veneér | 3280L | LAS | Kajuit | Camarote | Cabina | Cabine |
| 2 | 56 | 1 mm x-veneér | 3279L | LAS | Kajuit | Camarote | Cabina | Cabine |
| 2 | 57 | 1 mm x-veneér | 3279L | LAS | Kajuit | Camarote | Cabina | Cabine |
| 2 | 58 | 1 mm x-veneér | 3279L | LAS | Kajuit | Camarote | Cabina | Cabine |
| 1 | 59 | 2 mm x-veneér | 3281L | LAS | Kajuit | Camarote | Cabina | Cabine |
| 2 | 60 | 1 mm x-veneér | 3279L | LAS | Kajuit | Camarote | Cabina | Cabine |
| 1 | 61 | 1 mm x-veneér | 3279L | LAS | Kajuit | Camarote | Cabina | Cabine |
| 1 | 62 | 1 mm x-veneér | 3279L | LAS | Kajuit | Camarote | Cabina | Cabine |
| 1 | 63 | 1 mm x-veneér | 3279L | LAS | Kajuit | Camarote | Cabina | Cabine |
| 2 | 64 | 1 mm x-veneér | 3279L | LAS | Kajuit | Camarote | Cabina | Cabine |
| 1 | 65 | 1 mm x-veneér | 3279L | LAS | Dak | Techo | Tetto | Teto |
| 1 | 66 | 1 mm x-veneér | 3279L | LAS | Kajuit | Camarote | Cabina | Cabine |
| 2 | 67 | 1 mm x-veneér | 3279L | LAS | Stuurhuis | Garita del timonel | Cabina di pilotaggio | Cabine do timão |
| 2 | 68 | 1 mm x-veneér | 3279L | LAS | Stuurhuis | Garita del timonel | Cabina di pilotaggio | Cabine do timão |
| 1 | 69 | 1 mm x-veneér | 3279L | LAS | Dak | Techo | Tetto | Teto |
| 2 | 70 | 1 mm x-veneér | 3279L | LAS | Reling | Barrandilla | Parapetto di murata | Corrimão |
| 2 | 71 | 1 mm x-veneér | 3279L | LAS | Reling | Barrandilla | Parapetto di murata | Corrimão |
| 2 | 72 | 1 mm x-veneér | 3279L | LAS | Reling | Barrandilla | Parapetto di murata | Corrimão |
| 2 | 73 | 2 mm x-veneér | 3281L | LAS | Steun | Soporte | Supporto | Suporte |
| 4 | 74 | 5 mm x-veneér | 3286L | LAS | Bovenlicht | Claraboya | Osteriggio | Clarabóia |
| 2 | 75 | 4 mm x-veneér | 3284L | LAS | Bovenlicht | Claraboya | Osteriggio | Clarabóia |
| 4 | 76 | 1 mm x-veneér | 3279L | LAS | Bovenlicht | Claraboya | Osteriggio | Clarabóia |
| 8 | 77 | 5 mm x-veneér | 3286L | LAS | Bovenlicht | Claraboya | Osteriggio | Clarabóia |
| 6 | 78 | 1 mm x-veneér | 3279L | LAS | Bovenlicht | Claraboya | Osteriggio | Clarabóia |

| Psc. | No. | Dimension | Material | Found in | NL | E | I | P |
|---|---|---|---|---|---|---|---|---|
| 11 | 79 | 4 mm x-veneér | 3285L | LAS | Bovenlicht | Claraboya | Osteriggio | Clarabóia |
| 2 | 80 | 2 mm x-veneér | 3281L | LAS | Bovenlicht | Claraboya | Osteriggio | Clarabóia |
| 6 | 81 | 4 mm x-veneér | 3285L | LAS | Bovenlicht | Claraboya | Osteriggio | Clarabóia |
| 8 | 82 | 1 mm x-veneér | 3279L | LAS | Bovenlicht | Claraboya | Osteriggio | Clarabóia |
| 4 | 83 | 1 mm x-veneér | 3279L | LAS | Bovenlicht | Claraboya | Osteriggio | Clarabóia |
| 2 | 84 | 1 mm x-veneér | 3279L | LAS | Bovenlicht | Claraboya | Osteriggio | Clarabóia |
| 2 | 85 | 5 mm x-veneér | 3286L | LAS | Bovenlicht | Claraboya | Osteriggio | Clarabóia |
| 1 | 86 | 1 mm x-veneér | 3279L | LAS | Bovenlicht | Claraboya | Osteriggio | Clarabóia |
| 4 | 87 | 1 mm x-veneér | 3279L | LAS | Bovenlicht | Claraboya | Osteriggio | Clarabóia |
| 1 | 88 | 4 mm x-veneér | 3284L | LAS | Bovenlicht | Claraboya | Osteriggio | Clarabóia |
| 9 | 89 | 4 mm x-veneér | 3285L | LAS | Bovenlicht | Claraboya | Osteriggio | Clarabóia |
| 6 | 90 | 5 mm x-veneér | 3286L | LAS | Bovenlicht | Claraboya | Osteriggio | Clarabóia |
| 6 | 91 | 1 mm x-veneér | 3279L | LAS | Bovenlicht | Claraboya | Osteriggio | Clarabóia |
| 2 | 92 | 1 mm x-veneér | 3279L | LAS | Bovenlicht | Claraboya | Osteriggio | Clarabóia |
| 1 | 93 | 3 mm x-veneér | 3283L | LAS | Bovenlicht | Claraboya | Osteriggio | Clarabóia |
| 1 | 94 | 1 mm x-veneér | 3279L | LAS | Bovenlicht | Claraboya | Osteriggio | Clarabóia |
| 2 | 95 | 1 mm x-veneér | 3279L | LAS | Bovenlicht | Claraboya | Osteriggio | Clarabóia |
| 1 | 96 | 4 mm x-veneér | 3284L | LAS | Bovenlicht | Claraboya | Osteriggio | Clarabóia |
| 1 | 97 | 1 mm x-veneér | 3279L | LAS | Bovenlicht | Claraboya | Osteriggio | Clarabóia |
| 14 | 98 | 4 mm x-veneér | 3285L | LAS | Bovenlicht | Claraboya | Osteriggio | Clarabóia |
| 4 | 99 | 1 mm x-veneér | 3279L | LAS | Bovenlicht | Claraboya | Osteriggio | Clarabóia |
| 4 | 100 | 1 mm x-veneér | 3279L | LAS | Bovenlicht | Claraboya | Osteriggio | Clarabóia |
| 2 | 101 | 1 mm x-veneér | 3279L | LAS | Bovenlicht | Claraboya | Osteriggio | Clarabóia |
| 1 | 102 | 1 mm x-veneér | 3279L | LAS | Gevormd deel | Pieza de forma | Pezzo prefabbricato | Peça pré-moldada |
| 1 | 103 | 4 mm x-veneér | 3285L | LAS | Luik | Escotilla | Boccaporto | Escotilha |
| 1 | 104 | 1 mm x-veneér | 3279L | LAS | Bovenlicht | Claraboya | Osteriggio | Clarabóia |
| 1 | 105 | 2 mm x-veneér | 3281L | LAS | Anker winch | Chigre de ancla | Argano dell'ancora | Guincho da âncora |
| 4 | 106 | 1 mm x-veneér | 3279L | LAS | Anker winch | Chigre de ancla | Argano dell'ancora | Guincho da âncora |
| 4 | 107 | 5 mm x-veneér | 3286L | LAS | Winch | Chigre | Verricello, Arganello | Guincho |
| 4 | 108 | 2 mm x-veneér | 3280L | LAS | Winch | Chigre | Verricello, Arganello | Guincho |
| 4 | 109 | 2 mm x-veneér | 3280L | LAS | Davit | Pescante | Gruetta | Serviola/turco |
| 4 | 110 | 1 mm x-veneér | 3279L | LAS | Nagelbank | Banco de cabillas | Rastrelliera | Banco dos pinos de amarração |
| 4 | 111 | 1 mm x-veneér | 3279L | LAS | Nagelbank | Banco de cabillas | Rastrelliera | Banco dos pinos de amarração |
| 5 | 112 | 1 mm x-veneér | 3279L | LAS | Nagelbank | Banco de cabillas | Rastrelliera | Banco dos pinos de amarração |
| 21 | 113 | 1 mm x-veneér | 3279L | LAS | Kajuitdeur | Puerta de camarote | Porta della cabina | Porta da Cabine |
| 26 | 114 | 1 mm x-veneér | 3279L | LAS | Reddingsvlot, voet | Balsa salvavidas, pie | Zattera di salvataggi, piede | Bote Salva-vidas, pé de suporte |
| 8 | 115 | 1 mm x-veneér | 3279L | LAS | Ladder | Escalera | Scaletta | Escada |
| 5 | 116 | 1 mm x-veneér | 3279L | LAS | Ladder | Escalera | Scaletta | Escada |
| 10 | 117 | 2 mm x-veneér | 3281L | LAS | Gangboord | Pasarela | Passerella | Ponte de passagem |

| Psc. | No. | Dimension | Material | Found in | NL | E | I | P |
|---|---|---|---|---|---|---|---|---|
| 8 | 118 | 1 mm x-veneér | 3279L | LAS | Bolder-fundament | Bitones-placa de fondo | Base del bitta | Suporte do poste de amarração |
| 4 | 119 | 2 mm x-veneér | 3280L | LAS | Kanon | Cañón | Cannone | Canhão |
| 4 | 120 | 3 mm x-veneér | 3283L | LAS | Kanon | Cañón | Cannone | Canhão |
| 6 | 121 | 1 mm x-veneér | 3279L | LAS | Luik | Escotilla | Boccaporto | Escotilha |
| 4 | 122 | 2 mm x-veneér | 3281L | LAS | Mars | Cofa | Coffa | Topo de amurada |
| 8 | 123 | 2 mm x-veneér | 3280L | LAS | Mars | Cofa | Coffa | Topo de amurada |
| 3 | 124 | 2 mm x-veneér | 3280L | LAS | Boom vork | Boom tenedor | Boom forchetta | Garfo Boom |
| 2 | 125 | 1 mm x-veneér | 3279L | LAS | Reddingsboot | Bote salvavidas | Battello di salvataggio | Barco salva-vidas |
| 2 | 126 | 1 mm x-veneér | 3279L | LAS | Stander | Soporte del casco | Supporto | Suporte para o casco |
| 2 | 127 | 1 mm x-veneér | 3279L | LAS | Stander | Soporte del casco | Supporto | Suporte para o casco |
| 2 | 128 | 1 mm x-veneér | 3279L | LAS | Konsole | Consola | Consolle | Console |
| 4 | 129 | 1 mm x-veneér | 3279L | LAS | Reddingsboot | Bote salvavidas | Battello di salvataggio | Barco salva-vidas |
| 4 | 130 | 2 mm x-veneér | 3281L | LAS | Mastbeslag | Herrajes de palo | Accessorio per albero | Fitting do mastro |
| 1 | 131 | 4 mm x-veneér | 3284L | LAS | Stander | Soporte del casco | Supporto | Suporte para o casco |
| 1 | 132 | 4 mm x-veneér | 3284L | LAS | Stander | Soporte del casco | Supporto | Suporte para o casco |
| 1 | 133 | 4 mm x-veneér | 3285L | LAS | Stander | Soporte del casco | Supporto | Suporte para o casco |
| 1 | 134 | 4 mm x-veneér | 3285L | LAS | Stander | Soporte del casco | Supporto | Suporte para o casco |
| 1 | 135 | 1 mm x-veneér | 3279L | LAS | Schaar, vang | Posa botavara | Sostegno boma | Descanco da retranca |
| 10 | 136 | 0,7x1x550mm | Annegré | LB2 | Scheuerleiste | Listón de defensa | Listelli parabordo | Tira da defensa |
| 1 | 137 | 0,7x2x550mm | Mahogany | LB2 | Strip | Listón | Listello | Tira |
| 100 | 138 | 0,7x2x550mm | Annegré | LB2 | Strip | Listón | Listello | Tira |
| 4 | 139 | 1,8x2x550mm | Abachi | LB2 | Strip | Listón | Listello | Tira |
| 45 | 140 | 1,8x7x740mm | Obechi | LB1 | Strip | Listón | Listello | Tira |
| 1 | 141 | ø6x60mm | Basswood | TS | Rondhout | Palo redondo | Bastone rotondo | Bastão redondo |
| 4 | MS1+MS2+MS3 | ø8x330mm | Basswood | TS | Rondhout | Palo redondo | Bastone rotondo | Bastão redondo |
| 6 | MS4+MS5+BM1 | ø5x250mm | Basswood | TS | Rondhout | Palo redondo | Bastone rotondo | Bastão redondo |
| 1 | R1 | ø6x235mm | Basswood | TS | Rondhout | Palo redondo | Bastone rotondo | Bastão redondo |
| 2 | BM2+BM3 | ø5x160mm | Basswood | TS | Rondhout | Palo redondo | Bastone rotondo | Bastão redondo |
| 1 | R2 | ø4x225mm | Basswood | TS | Rondhout | Palo redondo | Bastone rotondo | Bastão redondo |
| 4 | BM4+R3 | ø4x180mm | Basswood | TS | Rondhout | Palo redondo | Bastone rotondo | Bastão redondo |
| 1 | R4 | ø3x120mm | Basswood | TS | Rondhout | Palo redondo | Bastone rotondo | Bastão redondo |
| 1 | | 60x200mm | | VEJ | Net | Red | Rete | Rede |
| 1 | | A4 | | VEJ | Bouwbeschrijving | Instrucciones de montaje | Istruzioni di montaggio | lnstruções de montagem |
| 1 | | A3 | | VEJ | Mast Tekeningen | Mástil dibujos | Mast Disegni | Mastro Desenhos |
| 1 | | TR 126 | | VEJ | Transfer | Calcas | Decalcomania | Decalque |
| 1 | | FL 146 | | VEJ | Vlag | Bandera | Bandiera | Bandeira |
| 1 | | | | VEJ | Tekening | El dijubo | Disegno | Desenho |
| 2 | | 50x55cm | | | Zeil | Vela | Vele | Velas |

**FITTINGS**

| Psc. | No. | Dimension | Material | Found in | DK | GB | D | F |
|---|---|---|---|---|---|---|---|---|
| 146 | B2-375 | ø4mm | Brass | BF1-E | Koøje | Portlight | Bullauge | Hublot |
| 146 | B2-479 | ø3mm | Brass | BF1-C | Koøje | Portlight | Bullauge | Hublot |
| 3 | F22a | ø0,5x2500mm | Copper | BF1-C | Kobbertråd | Copperwire | Kupferdraht | Fil de cuivre |
| 1 | F35 | ø3x61mm | Brass | BF1-C | Flagstang | Flagstaff | Flaggenstock | Hampe |
| 2 | F37 | 15mm | Plastic | BF1-A | Anker | Anchor | Anker | Ancre |
| 6 | F39 | ø1,0x250mm | Brass | MS | Messingtråd | Brass wire | Messingdräht | Fils de laiton |
| 1 | F45 | ø30mm | Plastic | BF1-B | Skibsskrue | Propeller | Schiffsschraube | Hélice |
| 118 | F54 | 8mm | Wood | BF1-A | Kofilnagle | Belaying pin | Belegnägel | Cabillot |
| 1 | F56 | ø5x5,2mm | Brass | BF1-E | Klokke | Bell | Glocke | Cloche |
| 2 | F60 | 20mm | Plastic | BF1-A | Ventil | Vent | Lüfter | Manche á air |
| 2 | F63 | ø5x2,25mm | Brass | BF1-C | Kobling | Coupling | Kupplung | Accouplement |
| 1 | F70 | 50 m | | TS2 | Rigningstråd | Rigging thread | Takelgarn | Fil de gréement |
| 1 | F71 | 75 m | | TS2 | Rigningstråd | Rigging thread | Takelgarn | Fil de gréement |
| 1 | F72 | 20 m | | TS2 | Rigningstråd | Rigging thread | Takelgarn | Fil de gréement |
| 1 | F76 | 150mm | Brass | BF2 | Ankerkæde | Anchor chain | Anker kette | Chaine d´ancre |
| 2 | F103 | ø6x5mm | Brass | BF1-C | Ankerklyds | Anchor fairlead | Ankerklüse | Ecubler d'ancre |
| 1 | F105 | ø4x4,5mm | Brass | BF1-C | Bøsning | Bushing | Buchsen | Baque |
| 6 | F136 | 12x12mm | Plastic | BF1-A | Redningsbælte | Lifebelt | Rettungsring | Ceinture de sauvetage |
| 131 | F145 | 14mm | Brass | BF1-D | Gelænderstøtte | Rail stanchion | Relingstütze | Chandelier |
| 4 | F158 | ø8mm | Brass | BF1-D | Kapstan | Capstan | Kapstan | Cabestan |
| 2 | F168 | 78mm | Plastic | BF2 | Redningsbåd | Lifeboat | Rettungsboot | Canot de sauvetage |
| 6 | F193 | 10x2,5mm | Plastic | BF2 | Klyds | Fairlead | Klüse | Chaumard |
| 1 | F196 | ø8x14mm | Brass | BF1-C | Motor | Engine | Motor | Moteur |
| 2 | F220 | ø8x19,5mm | Brass | BF1-D | Lanterne | Lantern | Lanterne | Lanterne |
| 30 | F227 | ø10,6x0,8mm | Plastic | VEJ | Sejlring | Sail hoop | Segelring | Cercel de voiles |
| 4 | F233 | 90mm | Plastic | BF1-B, BF2 | Redningsbåd | Lifeboat | Rettungsboot | Canot de sauvetage |
| 1 | F327 | 100 mm | Brass | BF2 | Kæde | Chain | Kette | Chaine |
| 5 | F330 | ø1x10mm | Brass | BF1-C | Stift | Pin | Stift | Clous |
| 8 | F348 | 9mm | Plastic | BF1-B | Klampe | Cleat | Klampe | Taquet |
| 4 | F378 | ø4x1,5mm | Brass | BF1-C | Konisk skive | Conical Disk | Konische Scheibe | Disque conique |
| 1 | F409 | ø1,5x250mm | Brass | MS | Messingtråd | Brass wire | Messingdräht | Fils de laiton |
| 4 | F482 | 11,5mm | Brass | BF1-E | Motor | Engine | Motor | Moteur |
| 30 | F488 | ø3mm | Plastic | BF1-B | Perle | Pearl | Perle | Perle |
| 2 | F498 | 11x22mm | Brass | BF1-E | Mastebeslag | Mastfitting | Mastbeschlag | Garniture de mât |
| 2 | F499 | ø3x8,5mm | Brass | BF1-E | Mastebeslag | Mastfitting | Mastbeschlag | Garniture de mât |
| 1 | F501 | ø4mm | Brass | BF1-E | Mastering | Mast hoop | Mastring | Cercle de mat |
| 1 | F502 | ø5mm | Brass | BF1-C | Mastering | Mast hoop | Mastring | Cercle de mat |
| 8 | F511 | ø2,5x55mm | Brass | BF1-D | David | Davit | Davit | Bossoir |

**FITTINGS**

| Psc. | No. | Dimension | Material | Found in | DK | GB | D | F |
|---|---|---|---|---|---|---|---|---|
| 8 | F537 | 25mm | Brass | BF1-E | Røstjern | Chainplate | Rüsteisen | Cadène |
| 16 | F577 | ø3mm | Brass | BF1-E | Pullert | Bollard | Poller | Bitte d'amarrage |
| 2 | F605 | ø8x6mm | Brass | BF1-C | Rulle | Roll | Rolle | Poulie |
| 2 | F634 | ø9mm | Brass | BF1-E | Koøje | Porthole | Bullauge | Hublot |
| 2 | F644 | ø13mm | Plastic | BF1-B | Håndhjul | Handwheel | Sternrad | Roue à main |
| 1 | F645 | ø8x2,5mm | Brass | BF1-C | Tandhjul | Gear wheel | Zahnrad | Roue dentée |
| 8 | F663 | ø0,75x250mm | Brass | MS | Messingtråd | Brass wire | Messingdräht | Fils de laiton |
| 186 | F664 | 11mm | Brass | BF1-E | Øjebolt | Eye bolt | Augbolzen | Pitons |
| 6 | F667 | ø6x4,8mm | Brass | BF1-C | Spiltromle | Winch drum | Windenkopf | Tambour |
| 116 | F697 | 5mm | Wood | BF1-B | Blok, Enkelt | Block, Single | Block, einzel | Poulie, simple |
| 24 | F698 | 5mm | Wood | BF1-A | Blok, Dobbelt | Block, Double | Block, doppel | Poulies, double |
| 1 | F717 | 22mm | Brass | BF1-C | Bøjle | Yoke | Bügel | Potence |
| 1 | F726 | ø10x3mm | Brass | BF1-C | Tandhjul | Gear wheel | Zahnrad | Roue dentée |
| 56 | F743 | 9mm | Brass | BF1-C | Øjebolt | Eye bolt | Augbolzen | Pitons |
| 1 | F796 | ø5x8mm | Brass | BF1-C | Konsole | Console | Sockel | Console |
| 78 | F824 | ø2x14mm | Brass | BF1-C | Vantskruer | Turnschrouds | Wantenschrauben | Vis de ridage |
| 1 | F920 | 21mm | Brass | BF1-E | Rat | Wheel | Steuerrad | Roue |
| 13 | F996 | ø7,75x13,5mm | Brass | BF1-F | Redningsflåde | Liferaft | Rettungsinsel | Radeau de sauvetage |
| 1 | F997 | | Brass | BF2 | Galionsfigur | Figurehead | Galionsfigur | Figure de proue |

**FITTINGS**

| Psc. | No. | Dimension | Material | Found in | NL | E | I | P |
|---|---|---|---|---|---|---|---|---|
| 146 | B2-375 | ø4mm | Brass | BF1-E | Patrijspoort | Portilla | Oblò | Luz de bombordo |
| 146 | B2-479 | ø3mm | Brass | BF1-C | Patrijspoort | Portilla | Oblò | Luz de bombordo |
| 3 | F22a | ø0,5x2500mm | Copper | BF1-C | Koperdraad | Alambre de cabre | Filo ni rame | Fio de cobre |
| 1 | F35 | ø3x61mm | Brass | BF1-C | Vlaggestok | Asta de bandera | Asta portabandiera | Mastro de bandeira |
| 2 | F37 | 15mm | Plastic | BF1-A | Anker | Ancla | Ancora | Âncora |
| 6 | F39 | ø1,0x250mm | Brass | MS | Messingdraad | Hilo de latón | Filo in ottone | Fio de latão |
| 1 | F45 | ø30mm | Plastic | BF1-B | Propeller | Hélice | Elica | Hélice |
| 118 | F54 | 8mm | Wood | BF1-A | Korvijnägel | Cabilla | Ribattino | Pino de amarração |
| 1 | F56 | ø5x5,2mm | Brass | BF1-E | Scheepbel | Campanilla | Campana | Sino |
| 2 | F60 | 20mm | Plastic | BF1-A | Luchtkoker | Respiradero | Valvola | Respiradouro |
| 2 | F63 | ø5x2,25mm | Brass | BF1-C | Koppeling | Acoplamiento | Accoppiamento | Acoplamento |
| 1 | F70 | 50 m | | TS2 | Takelgaren | Hilo de aparejo | Filo per manovre | Linha de cordame |
| 1 | F71 | 75 m | | TS2 | Takelgaren | Hilo de aparejo | Filo per manovre | Linha de cordame |
| 1 | F72 | 20 m | | TS2 | Takelgaren | Hilo de aparejo | Filo per manovre | Linha de cordame |
| 1 | F76 | 150mm | Brass | BF2 | Ankerketting | Cadena de ancla | Catena dell'ancora | Corrente da âncora |
| 2 | F103 | ø6x5mm | Brass | BF1-C | Ankerverhaglklamp | Escobén de ancla | Cubia dell'ancora | Reforço da polia da âncora |
| 1 | F105 | ø4x4,5mm | Brass | BF1-C | Busje | Casquillo | Boccola | Casquilho |

**FITTINGS**

| Psc. | No. | Dimension | Material | Found in | NL | E | I | P |
|---|---|---|---|---|---|---|---|---|
| 6 | F136 | 12x12mm | Plastic | BF1-A | Reddingsgordel | Cinturón salvavidas | Cintura di salvataggio | Bóia Salva-vidas |
| 131 | F145 | 14mm | Brass | BF1-D | Railingpaal | Soporte de pasamanos | Supporti per corrimano | Poste de trilho |
| 4 | F158 | ø8mm | Brass | BF1-D | Kaapstander | Cabrestante | Argano | Cabrestante |
| 2 | F168 | 78mm | Plastic | BF2 | Reddingsboot | Bote salvavidas | Battello di salvataggio | Barco salva-vidas |
| 6 | F193 | 10x2,5mm | Plastic | BF2 | Verhaalklamp | Escobén | Passacavo | Tubarão hawse |
| 1 | F196 | ø8x14mm | Brass | BF1-C | Motor | Motor | Motore | Motor |
| 2 | F220 | ø8x19,5mm | Brass | BF1-D | Boordlichten | Linterna | Lanterna | Lanternas |
| 30 | F227 | ø10,6x0,8mm | Plastic | VEJ | Zeilbeslag | Herraje de vela | Anelli per la vela | Arco da vela |
| 4 | F233 | 90mm | Plastic | BF1-B, BF2 | Reddingsboot | Bote salvavidas | Battello di salvataggio | Barco salva-vidas |
| 1 | F327 | 100 mm | Brass | BF2 | Ketting | Cadena | Catena | Corrente |
| 5 | F330 | ø1x10mm | Brass | BF1-C | Spijkertjes | Clavijas | Chiodini | Pinos |
| 8 | F348 | 9mm | Plastic | BF1-B | Klamp | Cornamusas | Galloccia | Cunho |
| 4 | F378 | ø4x1,5mm | Brass | BF1-C | Conische schjif | Disco cónico | Disco conico | Disco cônico |
| 1 | F409 | ø1,5x250mm | Brass | MS | Messingdraad | Hilo de latón | Filo in ottone | Fio de latão |
| 4 | F482 | 11,5mm | Brass | BF1-E | Motor | Motor | Motore | Motor |
| 30 | F488 | ø3mm | Plastic | BF1-B | Perle | Perla | Perla | Pérola |
| 2 | F498 | 11x22mm | Brass | BF1-E | Mastbeslag | Herrajes de palo | Accessorio per albero | Fitting do mastro |
| 2 | F499 | ø3x8,5mm | Brass | BF1-E | Mastbeslag | Herrajes de palo | Accessorio per albero | Fitting do mastro |
| 1 | F501 | ø4mm | Brass | BF1-E | Mastring | Zunzho | Anello dell'albero | Anel do mastro |
| 1 | F502 | ø5mm | Brass | BF1-C | Mastring | Zunzho | Anello dell'albero | Anel do mastro |
| 8 | F511 | ø2,5x55mm | Brass | BF1-D | Davit | Pescante | Gruetta | Serviola/turco |
| 8 | F537 | 25mm | Brass | BF1-E | Putting | Cadenote | Landra | Placas das correntes |
| 16 | F577 | ø3mm | Brass | BF1-E | Bolder | Bitones | Bitta | Poste de amarração |
| 2 | F605 | ø8x6mm | Brass | BF1-C | Rollen | Rodillo | Pulegge | Polia |
| 2 | F634 | ø9mm | Brass | BF1-E | Patrijspoort | Portilla | Oblò | Escotilha |
| 2 | F644 | ø13mm | Plastic | BF1-B | Handwiel | Volante | Ruota ad uso manuale | Roda manual |
| 1 | F645 | ø8x2,5mm | Brass | BF1-C | Tandrad | Rueda dentada | Ruota dentata | Roda de engrenagem |
| 8 | F663 | ø0,75x250mm | Brass | MS | Messingdraad | Hilo de latón | Filo in ottone | Fio de latão |
| 186 | F664 | 11mm | Brass | BF1-E | Oogbout | Perno de cáncamo | Bullone ad occhio | Ferrolho |
| 6 | F667 | ø6x4,8mm | Brass | BF1-C | Winchkop | Tambor de cabrestante | Testa dell'argano | Tambor do guincho |
| 116 | F697 | 5mm | Wood | BF1-B | Blok, enkel | Polea, simple | Blocco, semplice | Bloco, simples |
| 24 | F698 | 5mm | Wood | BF1-A | Blok, dubbel | Polea, Doble | Blocco, doppio | Bloce, duplo |
| 1 | F717 | 22mm | Brass | BF1-C | Beugel | Percha | Arco | Cana do leme |
| 1 | F726 | ø10x3mm | Brass | BF1-C | Tandrad | Rueda dentada | Ruota dentata | Roda de engrenagem |
| 56 | F743 | 9mm | Brass | BF1-C | Oogbout | Perno de cáncamo | Bullone ad occhio | Ferrolho |
| 1 | F796 | ø5x8mm | Brass | BF1-C | Console | Consola | Consolle | Console |
| 78 | F824 | ø2x14mm | Brass | BF1-C | Wantspanners | Tornillo de Jarcia | Viti per le sartie | Sargento (esticador) |
| 1 | F920 | 21mm | Brass | BF1-E | Stuurwiel | Volante | Ruota del timone | Volante do timão |
| 13 | F996 | ø7,75x13,5mm | Brass | BF1-F | Reddingsvlot | Balsa salvavida | Zatterea di salvataggio | Bote Salva-vidas |
| 1 | F997 | | Brass | BF2 | Boegbeeld | Figurón de proa | Polena | Figura de proa |

Symboler = Rigningsnummer

= Farvenummer

Symbols = Rigging No.

= Colour No.

Zeichen = Takel Nr.

= Farben Nr.

Symboles = Greement no.

= Couleur no.

Symbolen = Tuigage Nr.

= Kleur Nr.

Símbolo = Oparejo Nr.

= Color Nr.

Segno = Attrezzatura N°

= Colore N°

Simbolos = Cordame n°

= Cõr n°

Til denne model er mahogni bejdse og farver med følgende numre nødvendige:
For this model is mahogany stain and colours with the following numbers should be used:
Für dieses Modell sind Mahagoni Beize und Farben mit den folgenden Nummern notwendig:
Pour ce modèle, le mordant et les couleurs avec les numéros suivants doivent être employées:
Voor dit model zijn kleuren met de volgende nummers nodig:
Para est modelo se necesitan mordiente et colores con los siguientes nùmeros:
Per questo modello occorrono inchiostro tinteggiatore ”mogano” e colori con questi numeri:
Pinte o modelo com tintura cõr Mogno e as cõres sugeridas da Billing Boats:

| | | | |
|---|---|---|---|
| Billing | 1 | = | White |
| Billing | 3 | = | Emerald |
| Billing | 5 | = | Tan |
| Billing | 9 | = | Bright Red |
| Billing | 11 | = | Black |
| Billing | 12 | = | Pale Gray |
| Billing | 13 | = | Trainer Yellow |
| Billing | 17 | = | Clear Poly |
| Billing | 18 | = | Mediterranean Blue |
| Billing | 36 | = | Bejdse/Stain/Beize/Mordant/Beize/Mordient |

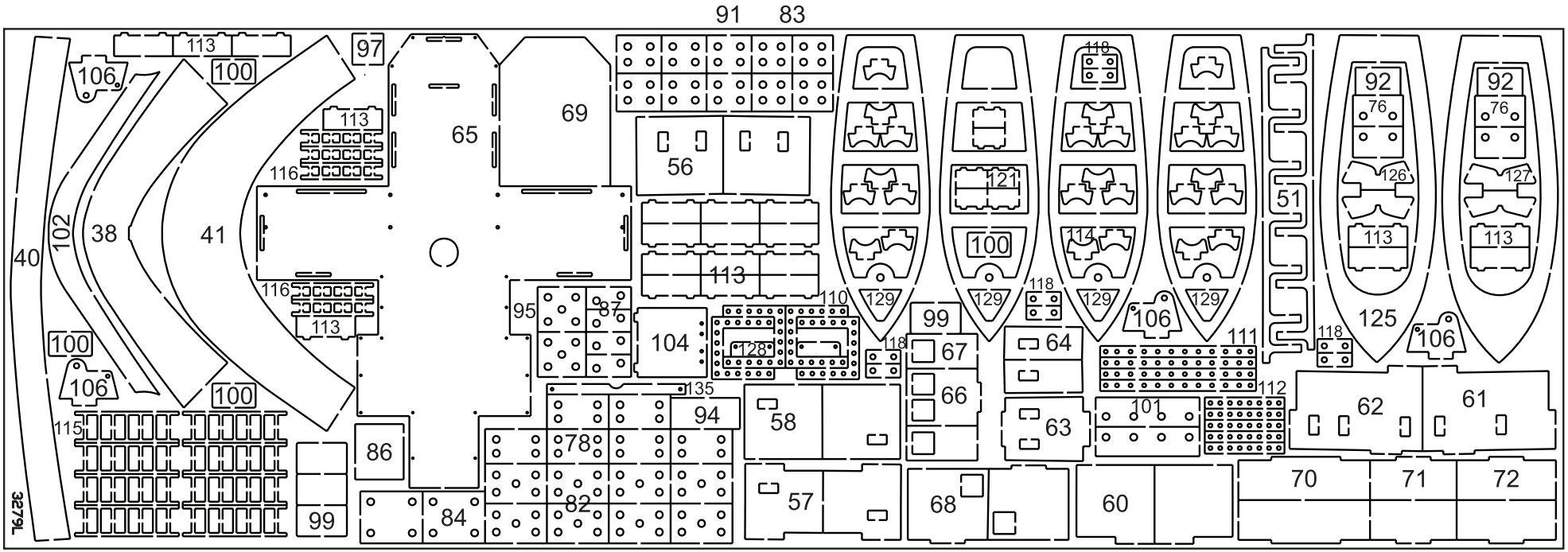
91
83
113
97
106
100
113
116
65
69
56
40
102
38
41
116
113
95
87
104
110
128
113
129
99
118
67
66
64
63
106
111
112
101
51
92
76
126
113
125
106
118
92
76
127
113
62
61
100
106
100
115
86
99
84
78
82
94
135
58
57
68
60
70
71
72
3279L

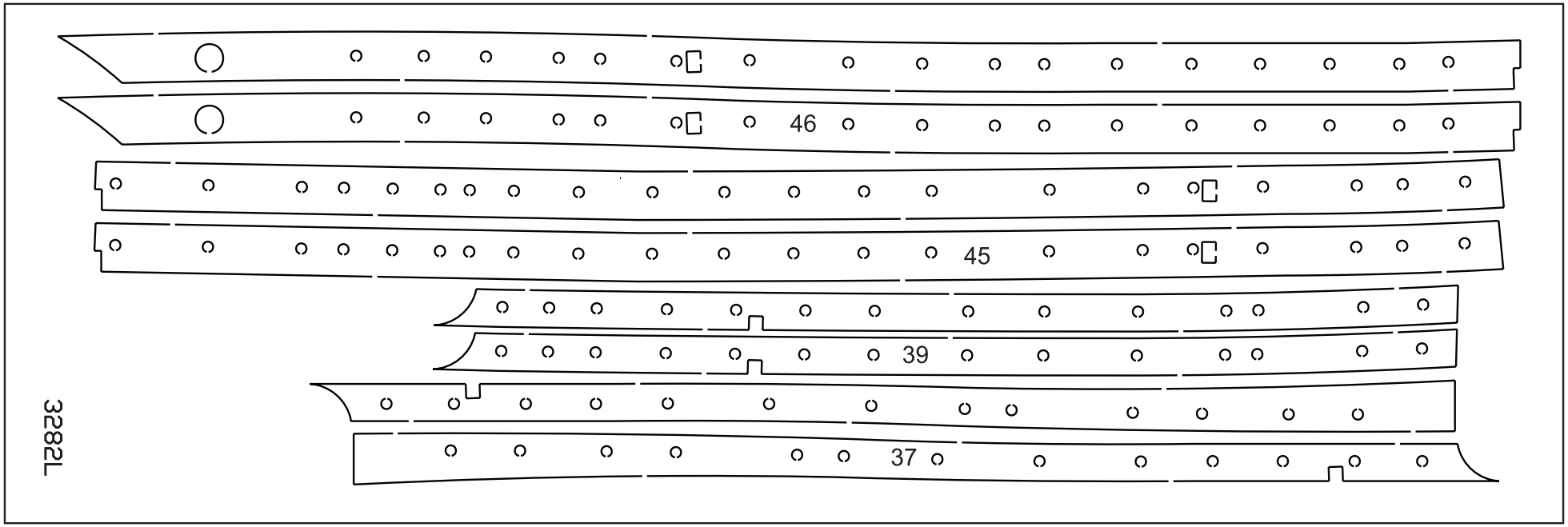
46
45
39
37
3282L

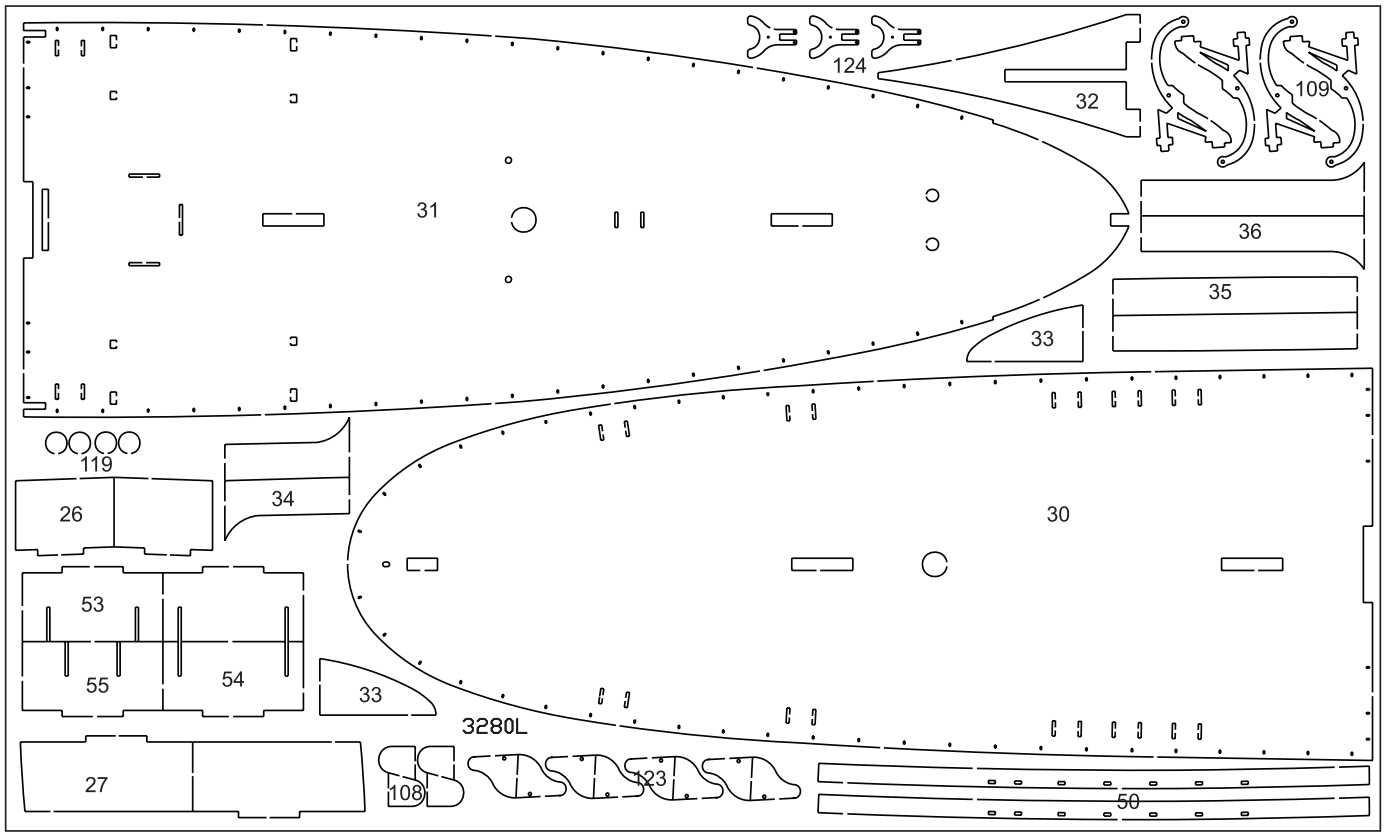
124
32
109
31
36
35
33
119
26
34
30
53
55
54
33
3280L
27
108
123
50

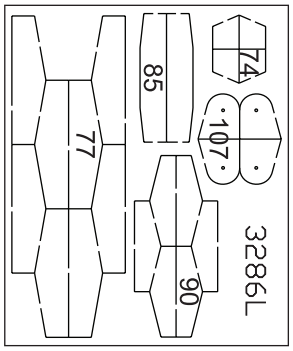
74
85
77
107
3286L
90

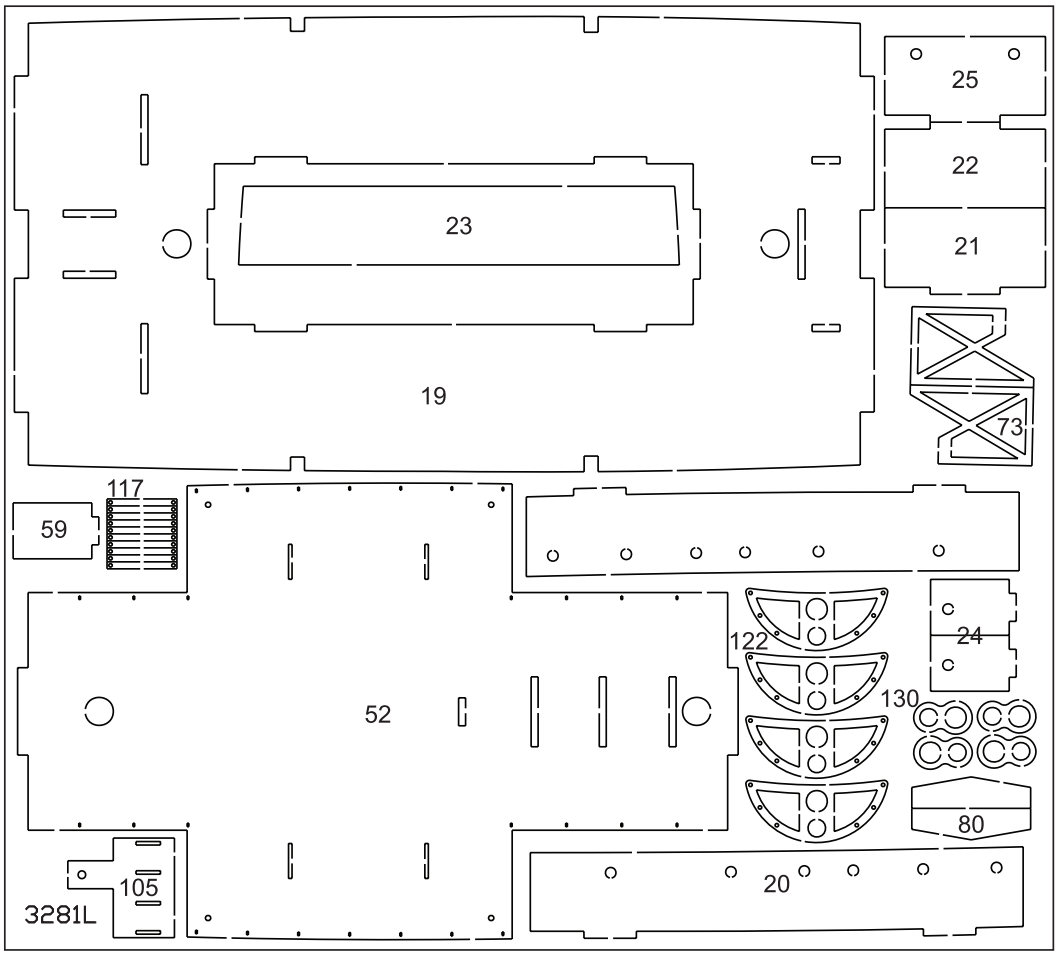
25
22
23
21
19
73
117
59
122
24
52
130
80
105
3281L
20

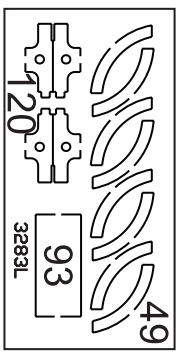
120
3283L
93
49

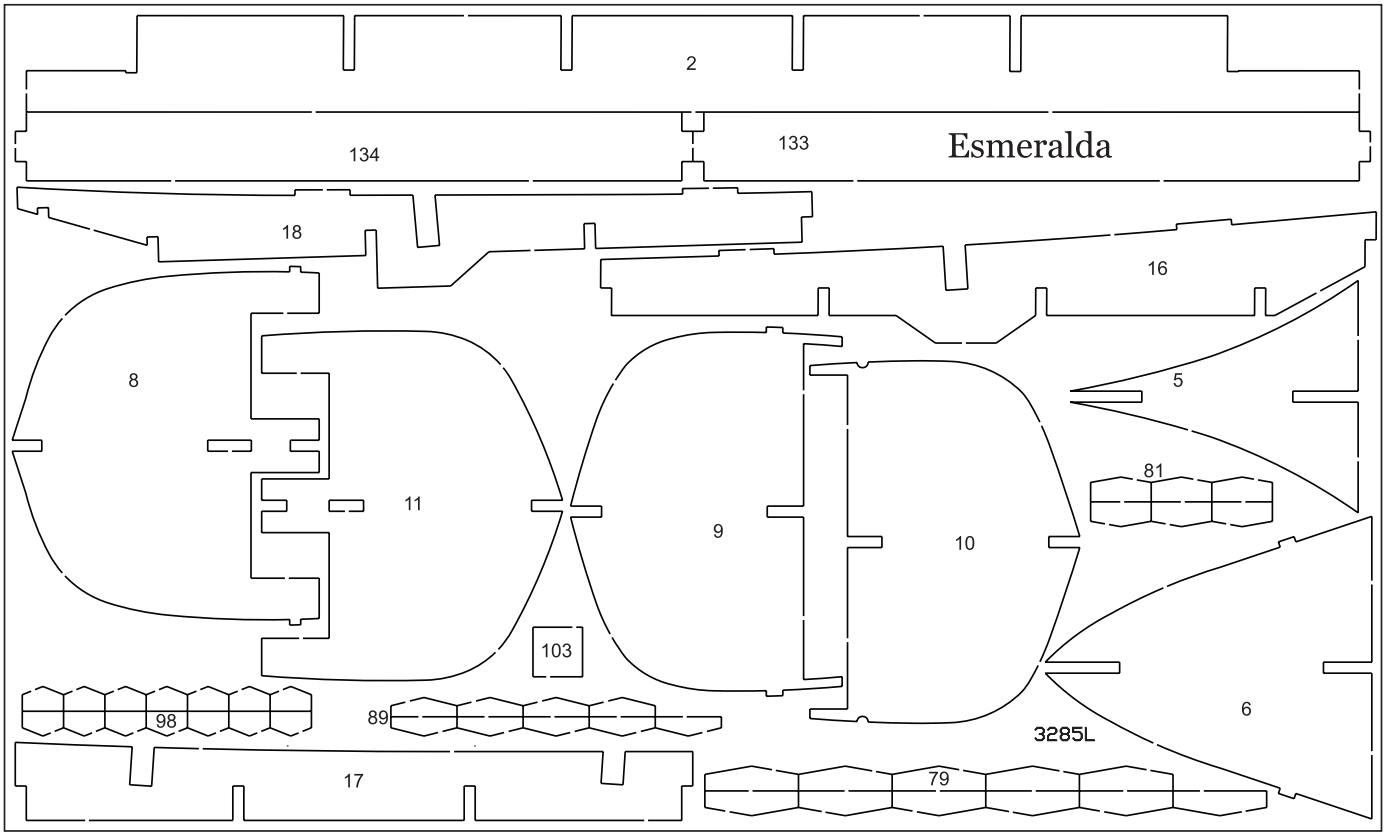
2
134
133
Esmeralda
18
16
8
5
11
81
9
10
103
98
89
6
3285L
17
79

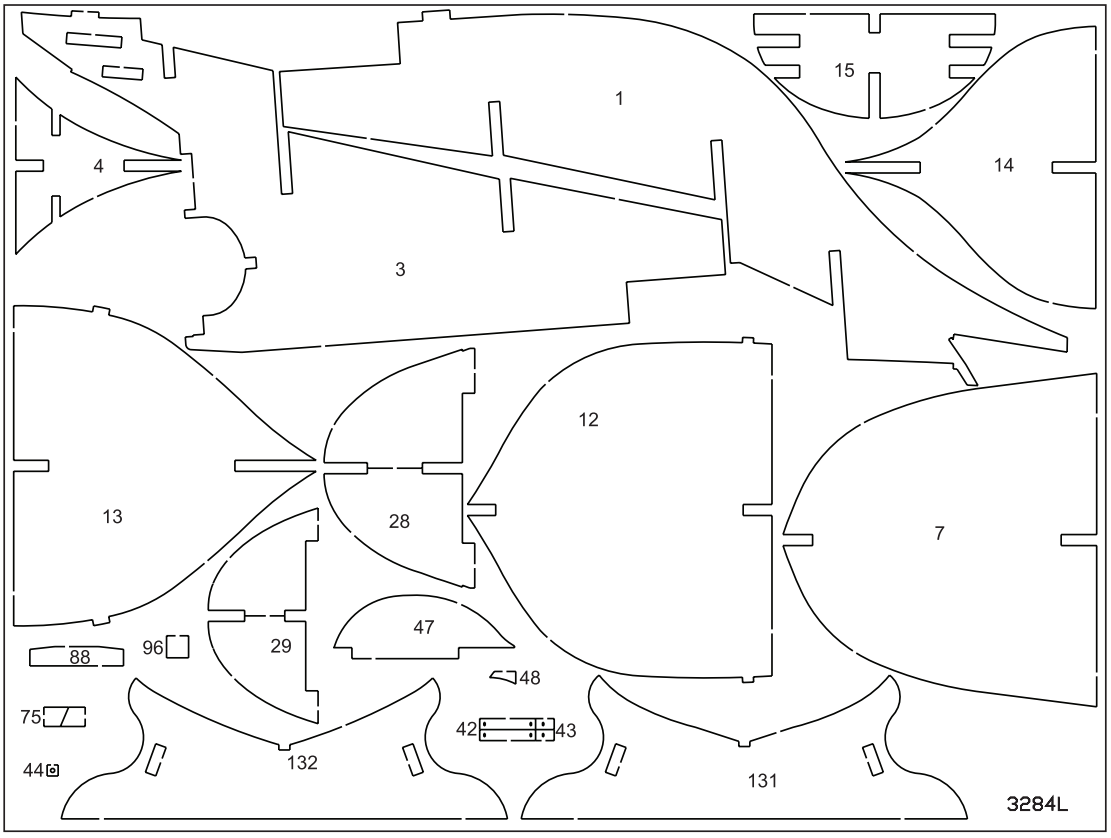
1
15
4
14
3
12
13
28
7
47
88
96
29
48
75
42
43
44
132
131
3284L

Fig 1

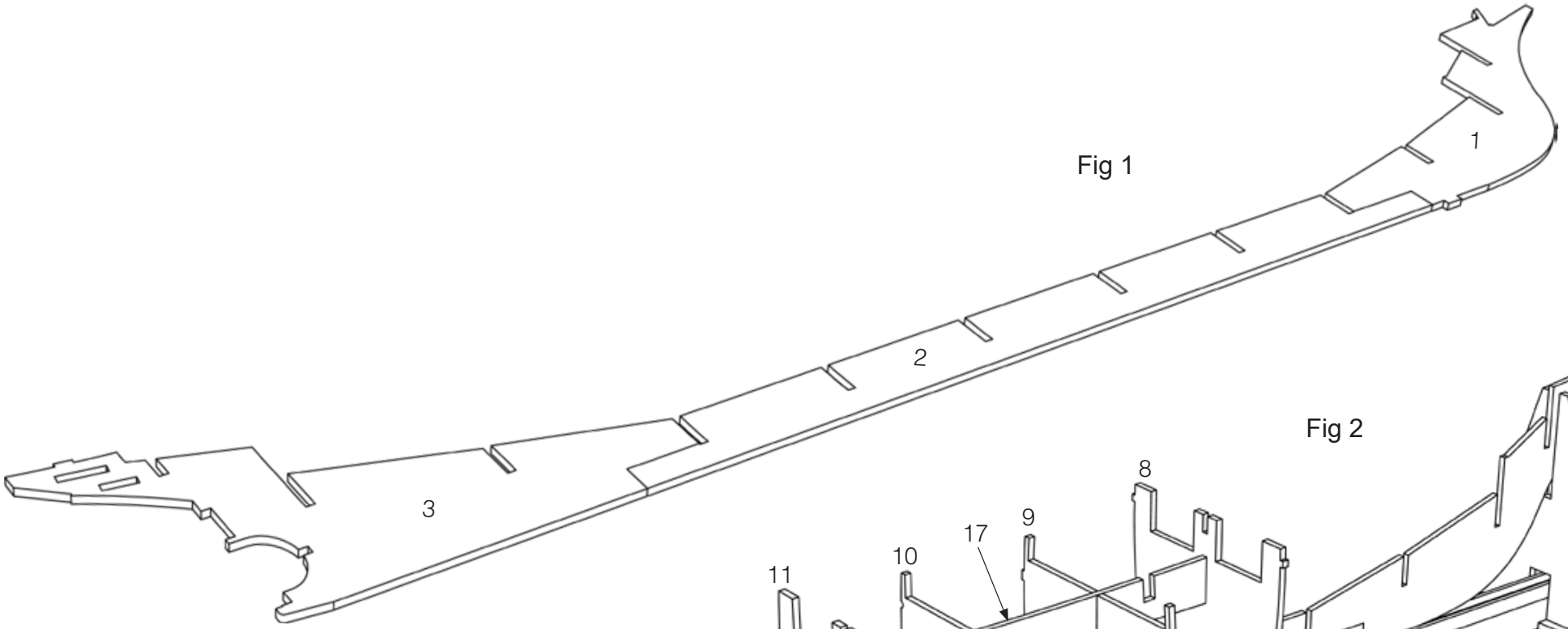


Fig 2

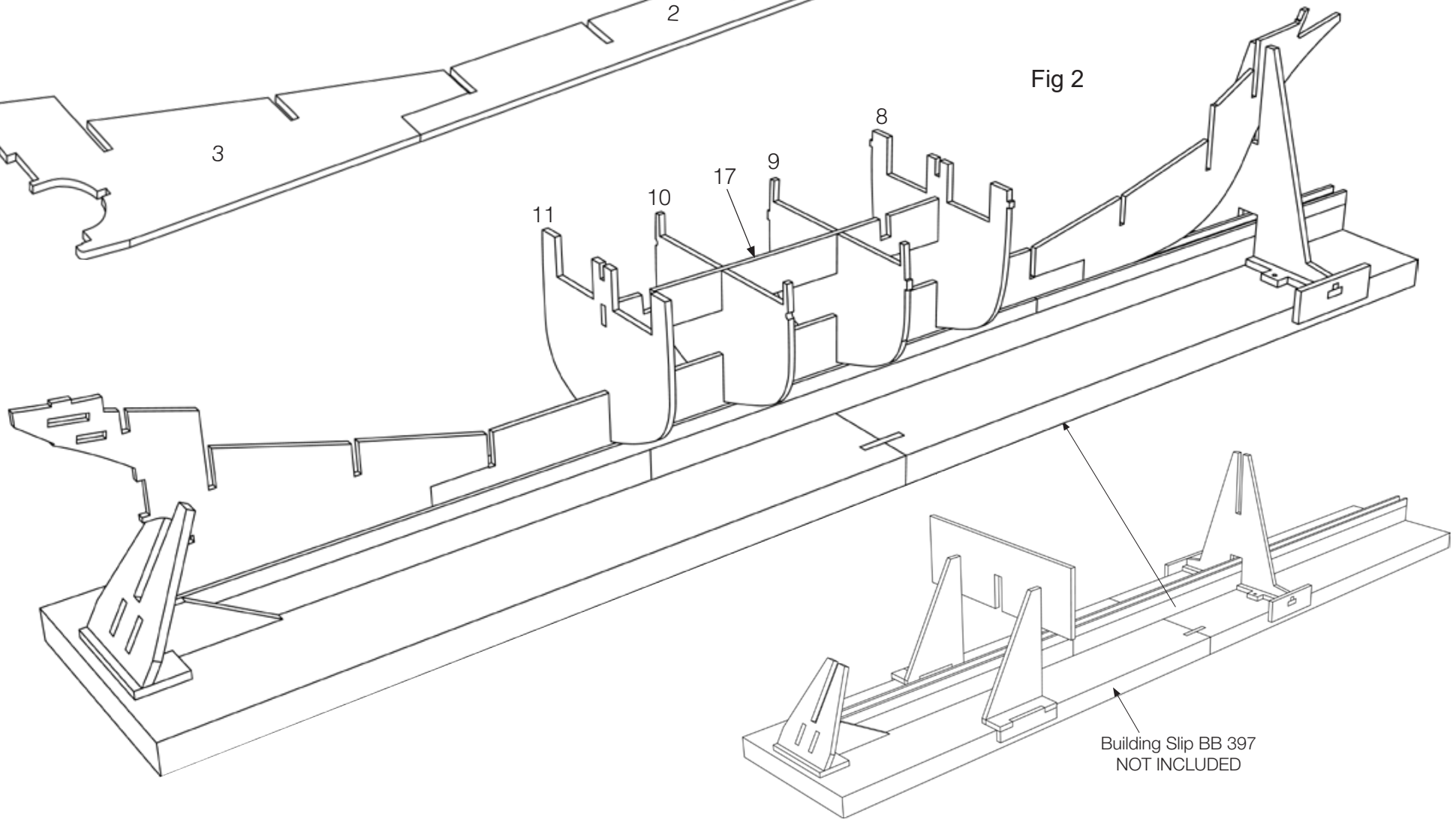

Fig. 3

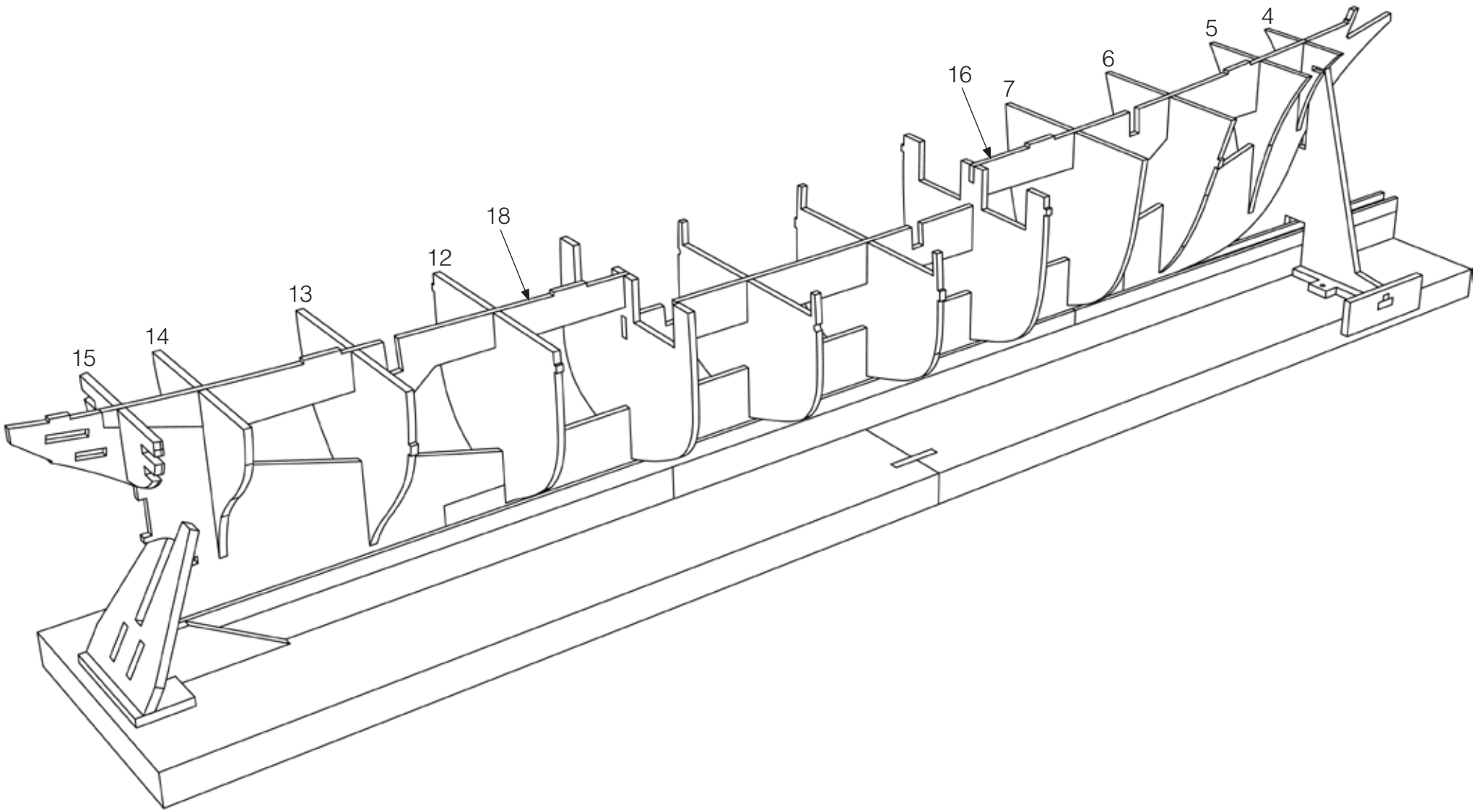

Fig. 4

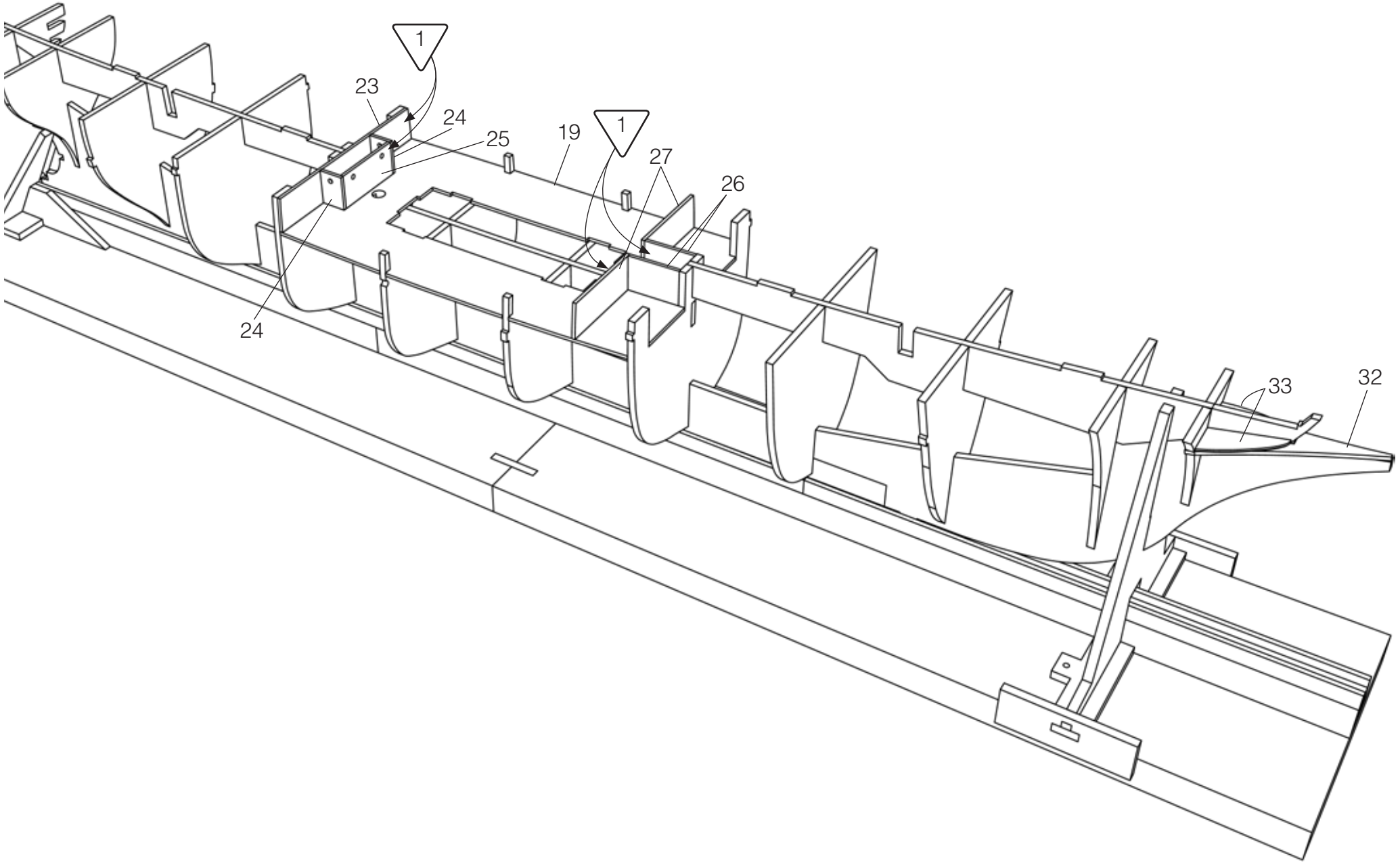

Fig. 5

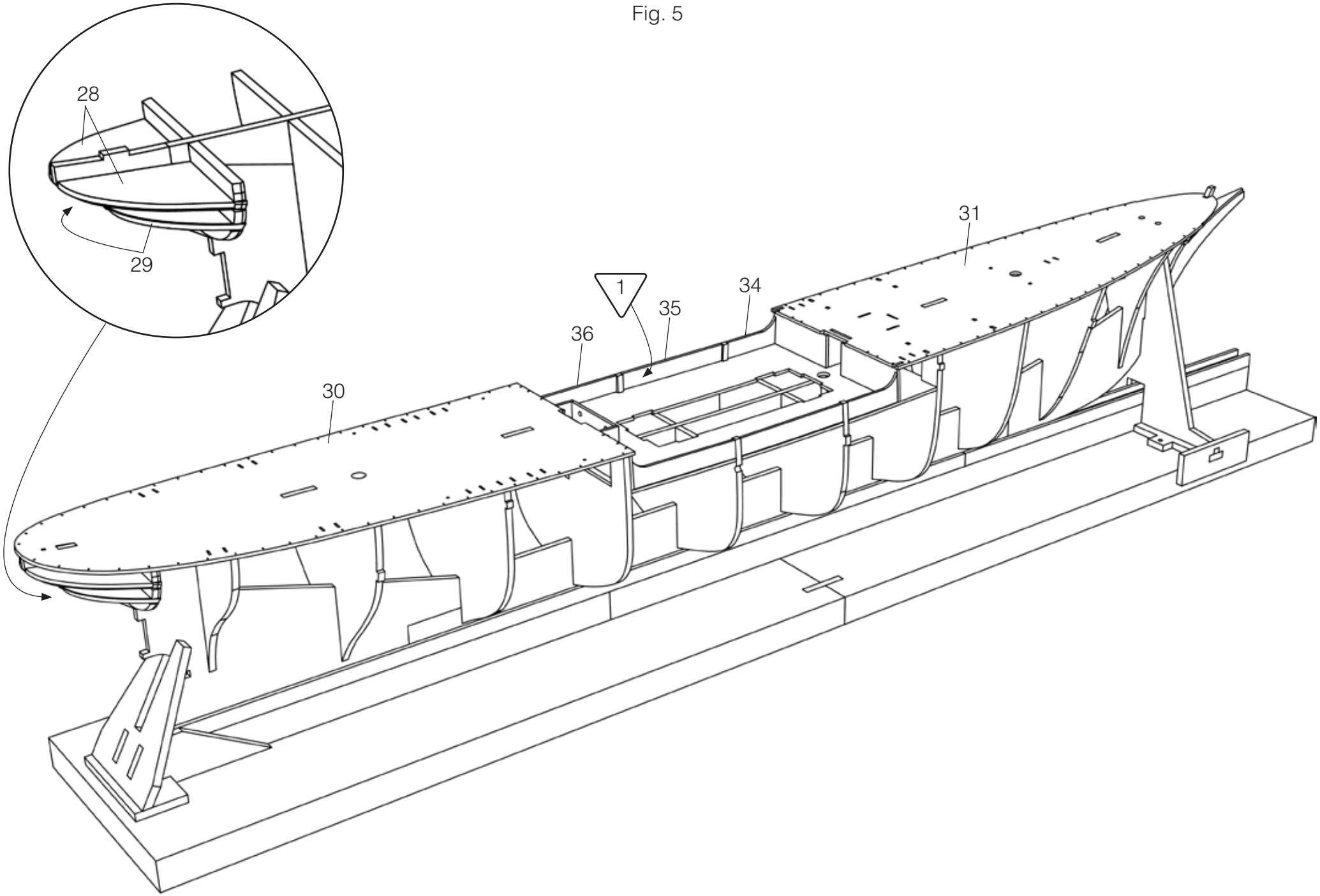

Fig. 6

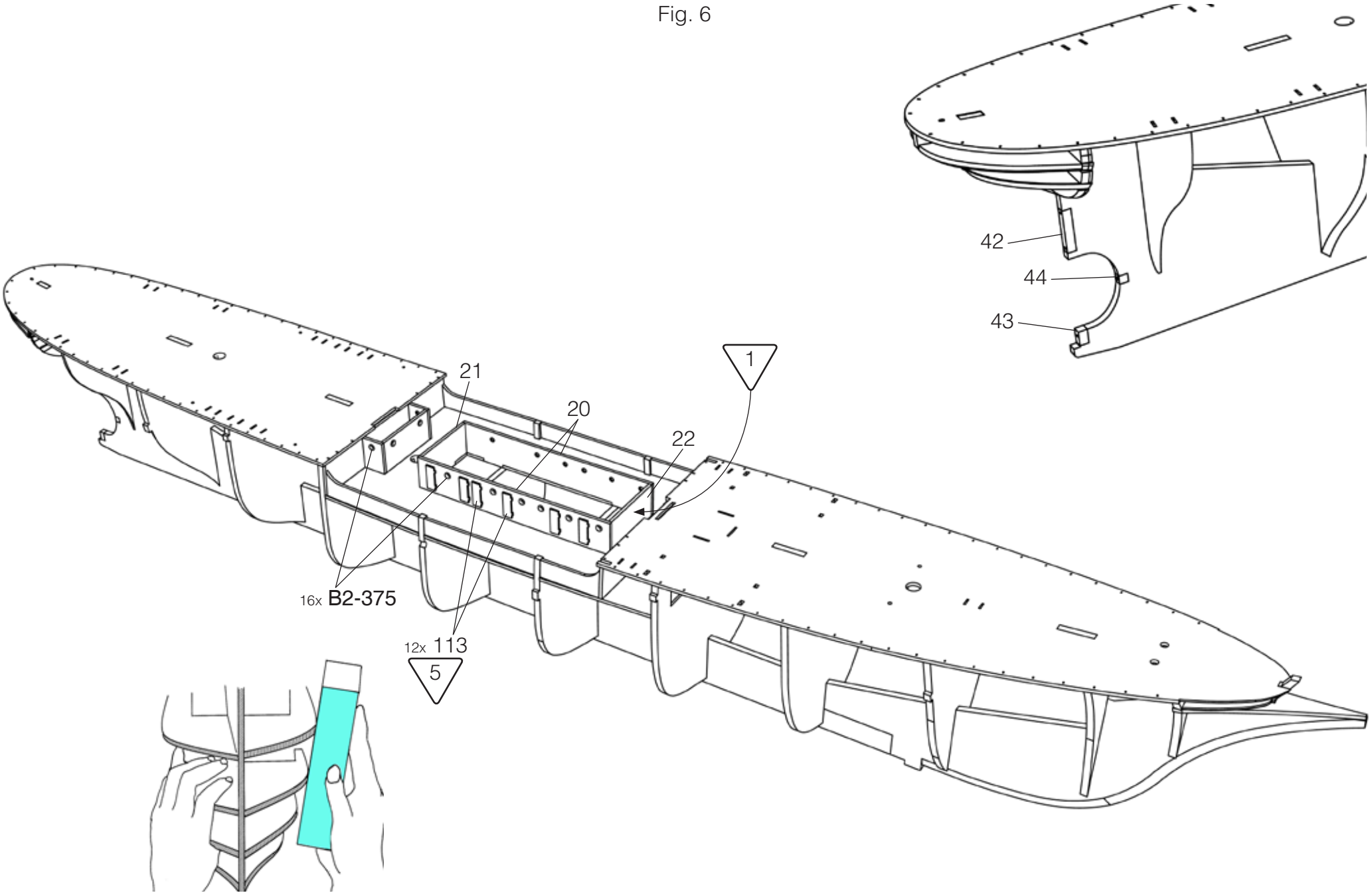

Fig. 7

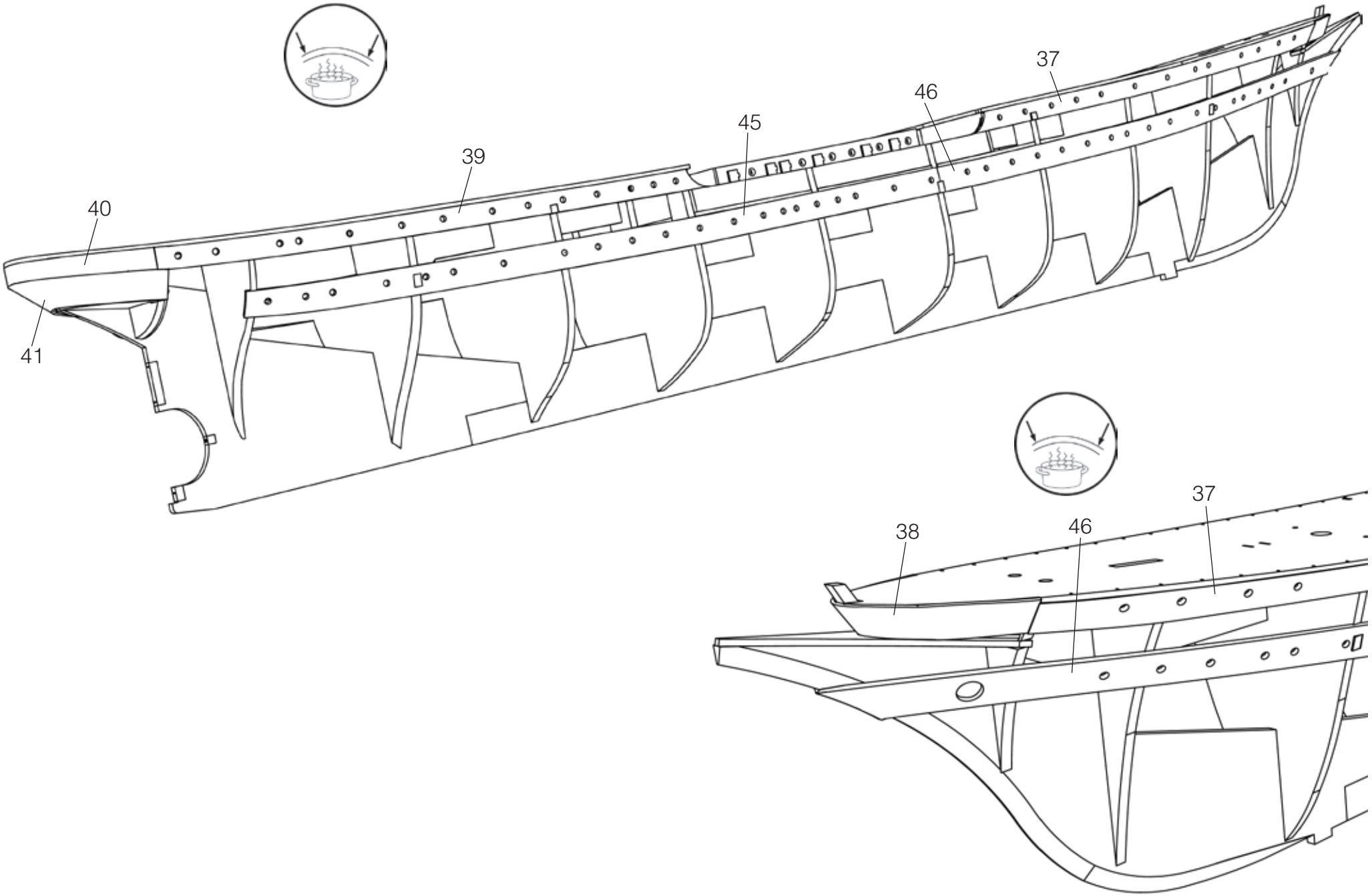

Fig. 8

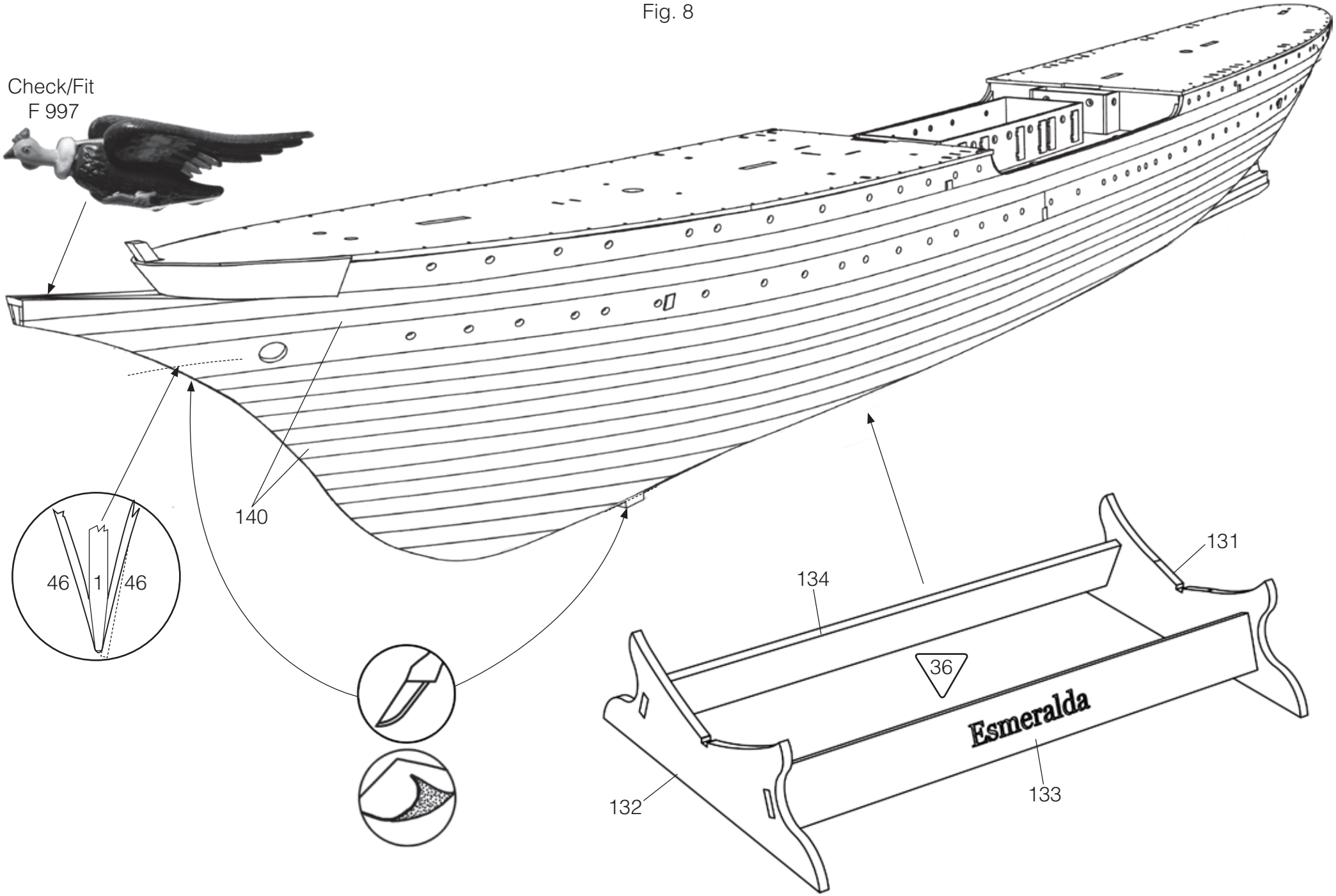

Fig. 9

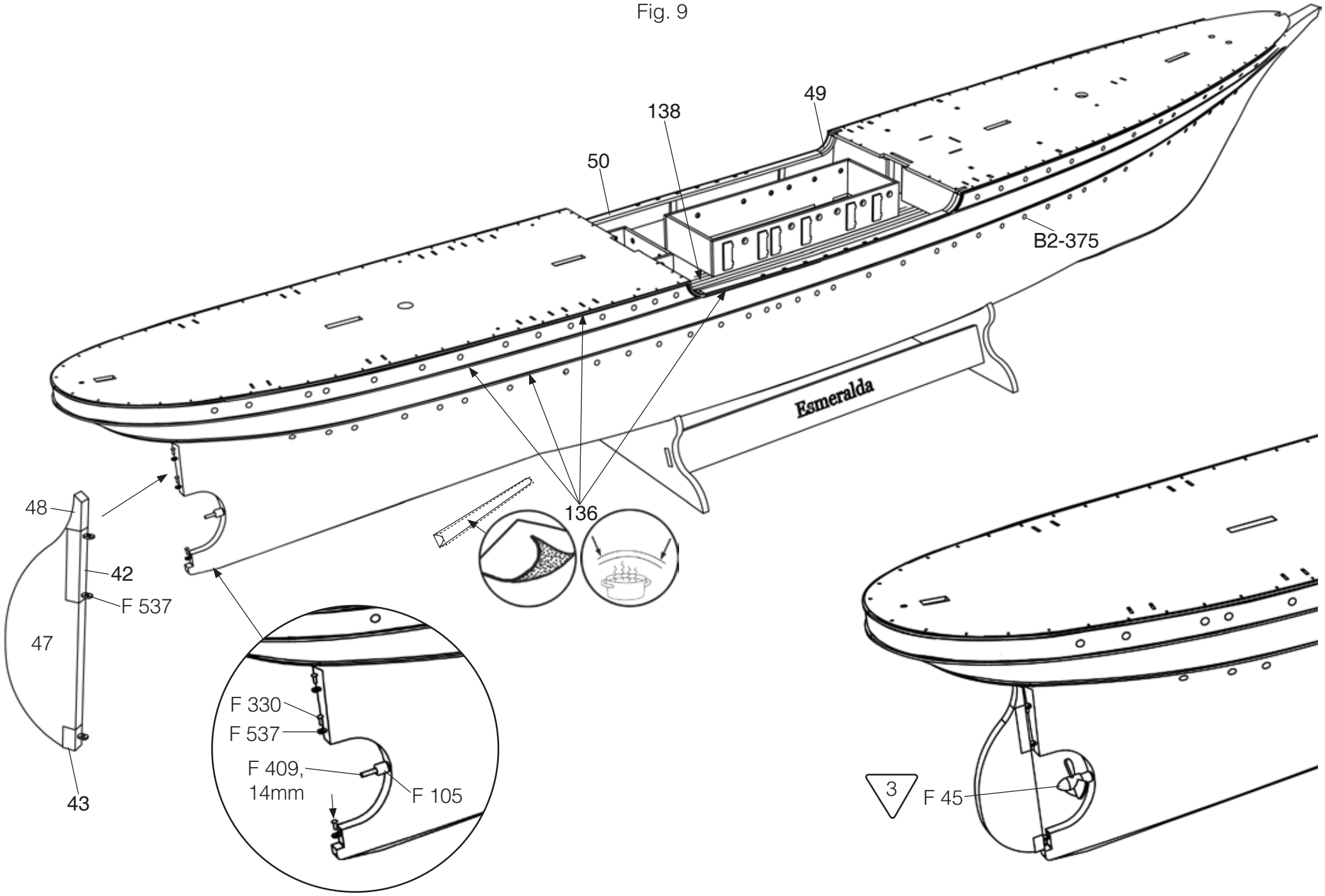
49
138
50
B2-375
Esmeralda
136
48
42
F 537
47
43
F 330
F 537
F 409,
14mm
F 105
3
F 45

Fig. 10

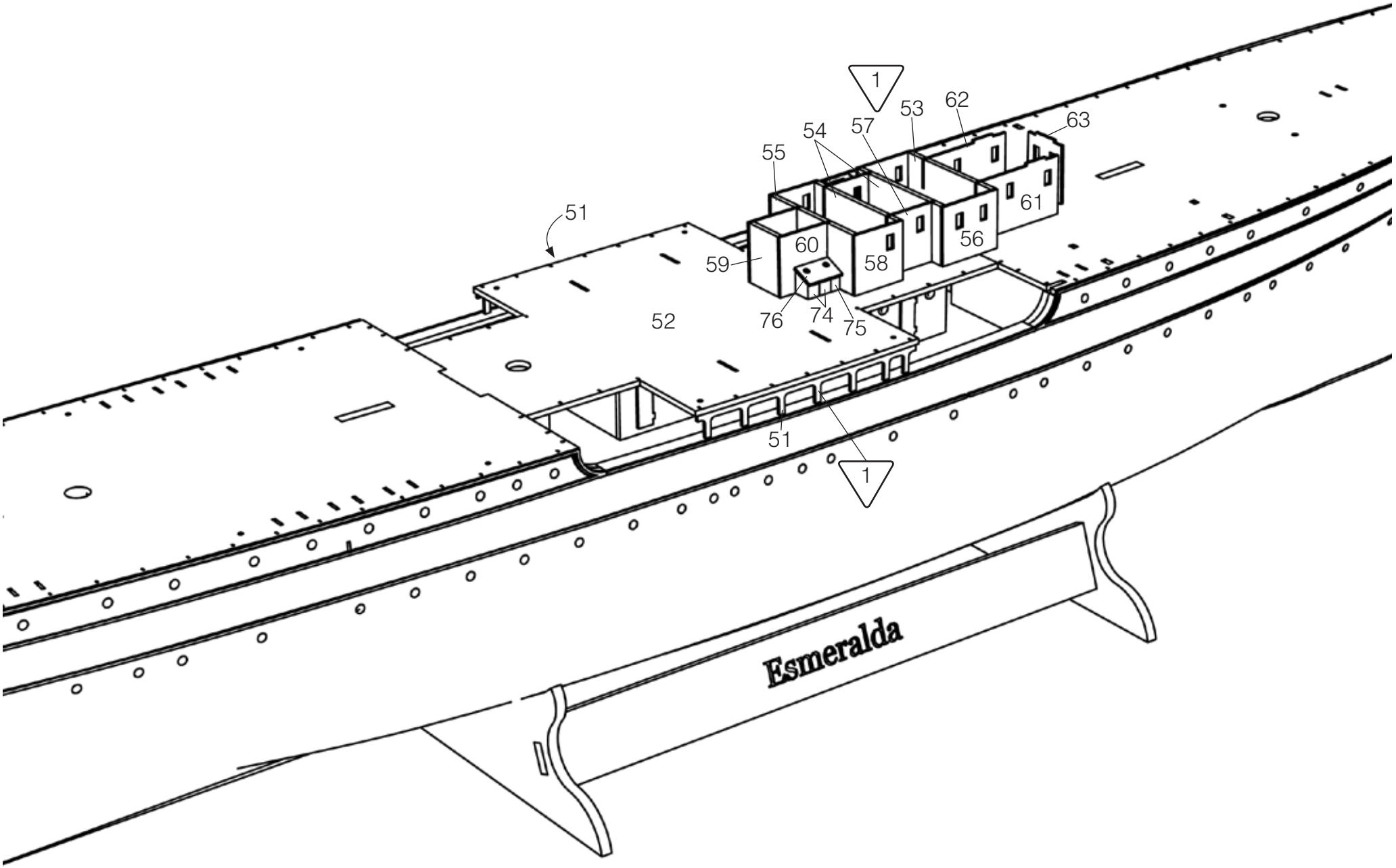

Fig. 11

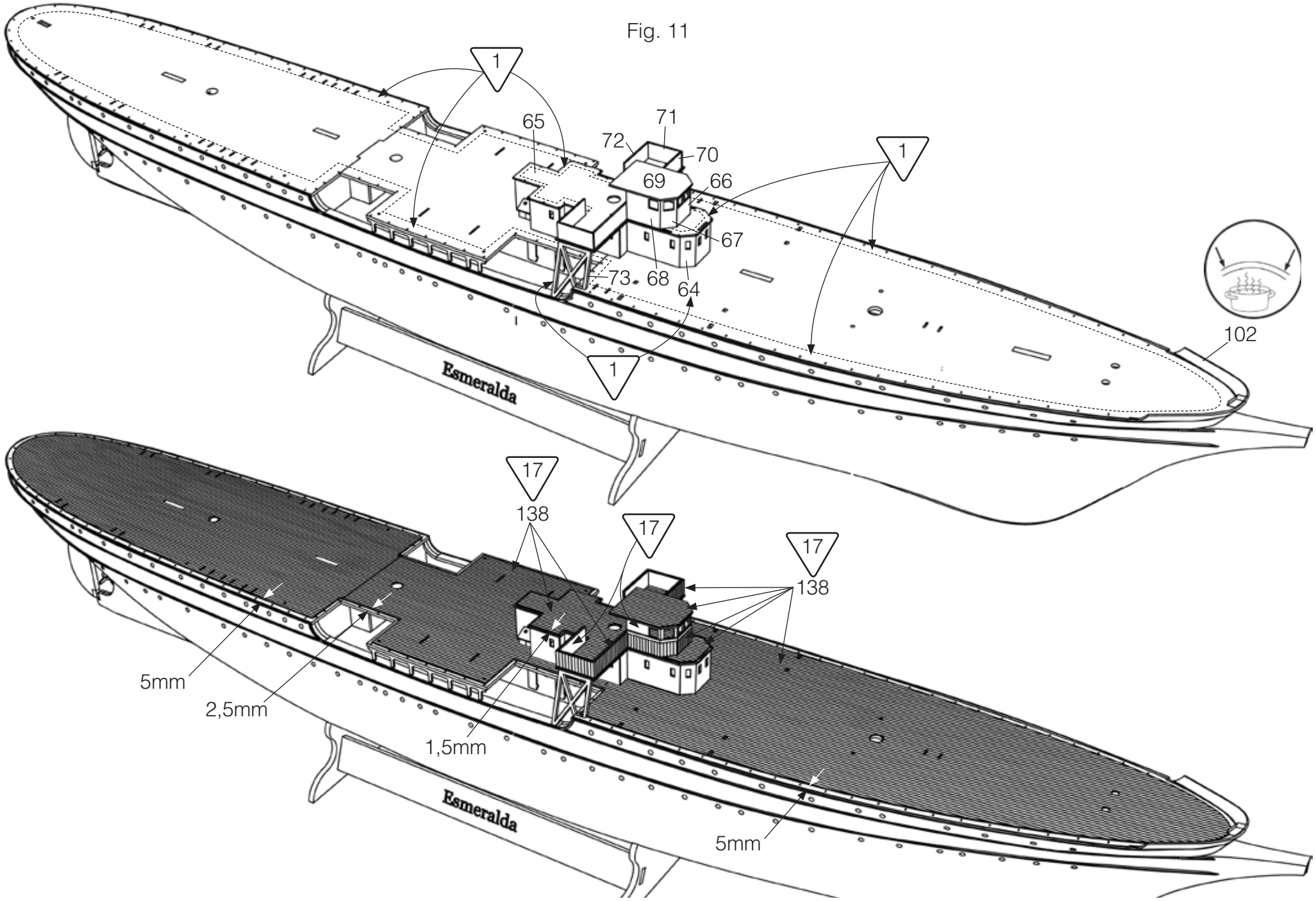
1
65
71
72
70
69
66
67
73
68
64
1
1
102
Esmeralda
17
138
17
17
138
5mm
2,5mm
1,5mm
Esmeralda
5mm

Fig. 12

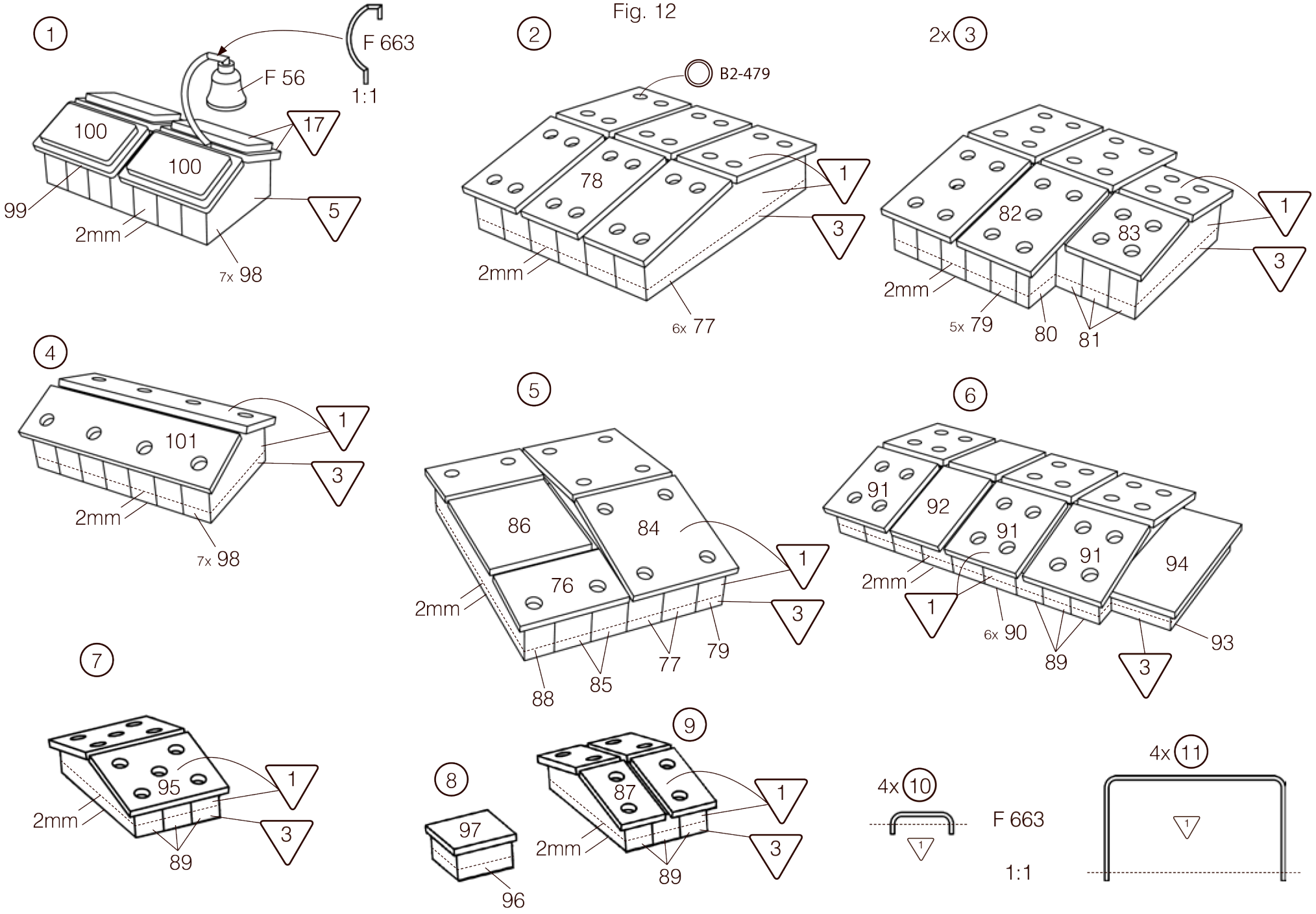
1
F 663
1:1
F 56
100
100
17
99
5
2mm
7x 98
2
B2-479
78
1
3
2mm
6x 77
2x 3
82
83
1
3
2mm
5x 79
80
81
4
101
1
3
2mm
7x 98
5
86
84
76
1
3
2mm
88
85
77
79
6
91
92
91
91
94
2mm
1
6x 90
89
93
3
7
95
1
3
2mm
89
8
97
96
9
87
1
3
2mm
89
4x 10
1
F 663
1:1
4x 11
1

Fig. 13

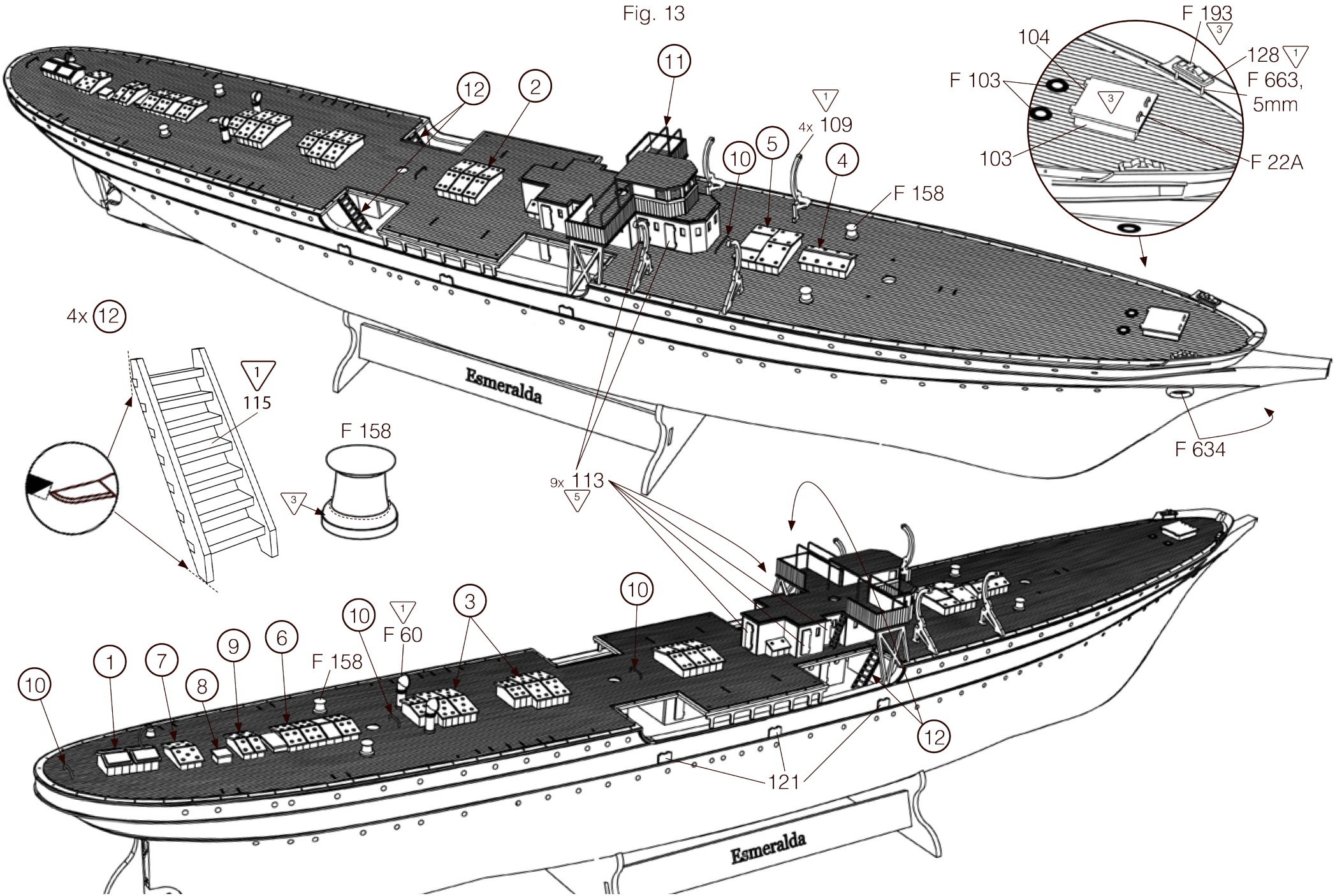
F 193
104
128
F 663,
5mm
F 103
103
F 22A
11
12
2
4x 109
10
5
4
F 158
4x 12
115
F 158
9x 113
F 634
Esmeralda
10
1
7
8
9
6
F 158
10
F 60
3
10
12
121
Esmeralda

Fig. 14

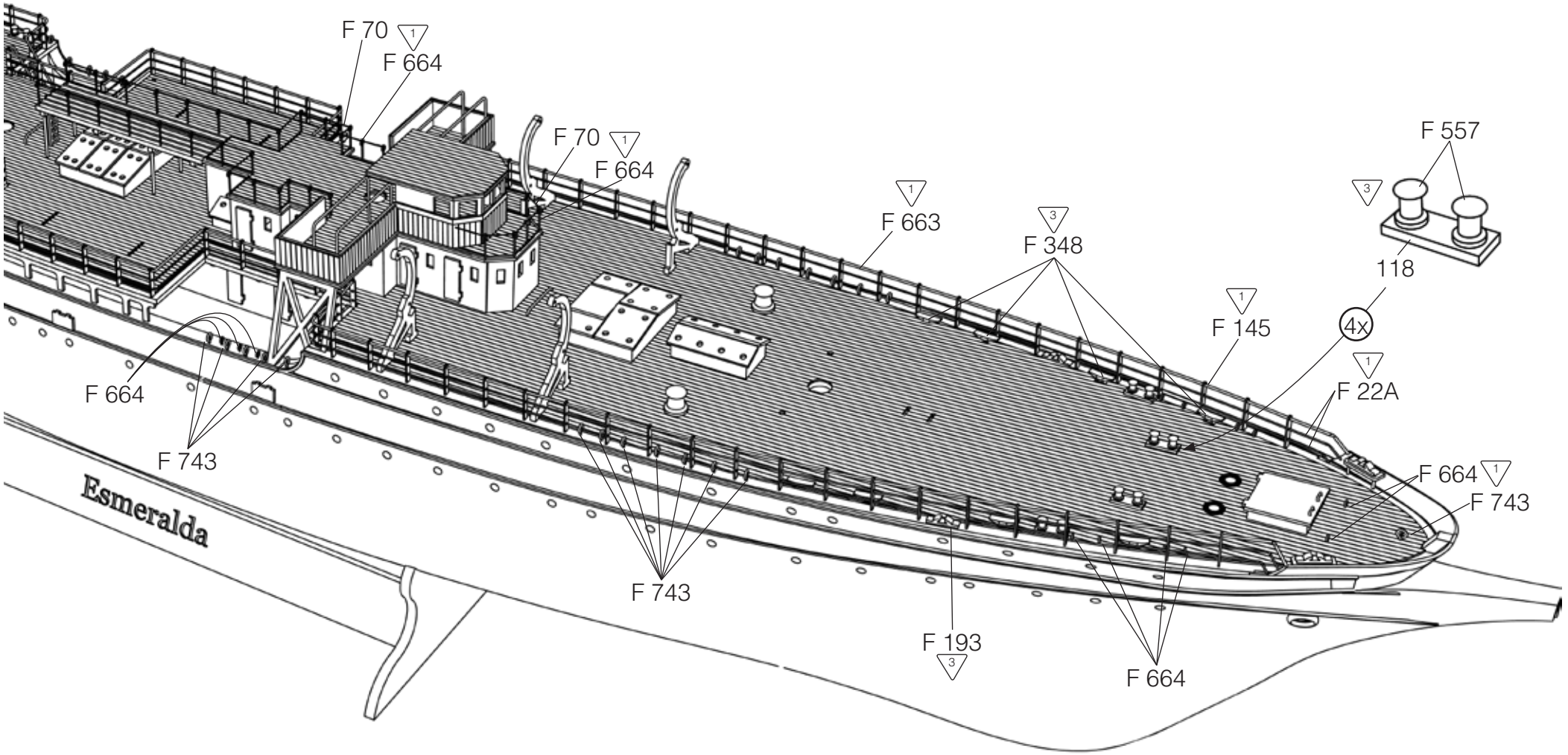
F 70
1
F 664
F 70
1
F 664
1
F 663
3
F 348
F 557
3
118
1
F 145
4x
1
F 22A
F 664
F 743
F 664
1
F 743
F 743
F 193
3
F 664
Esmeralda

Fig. 15

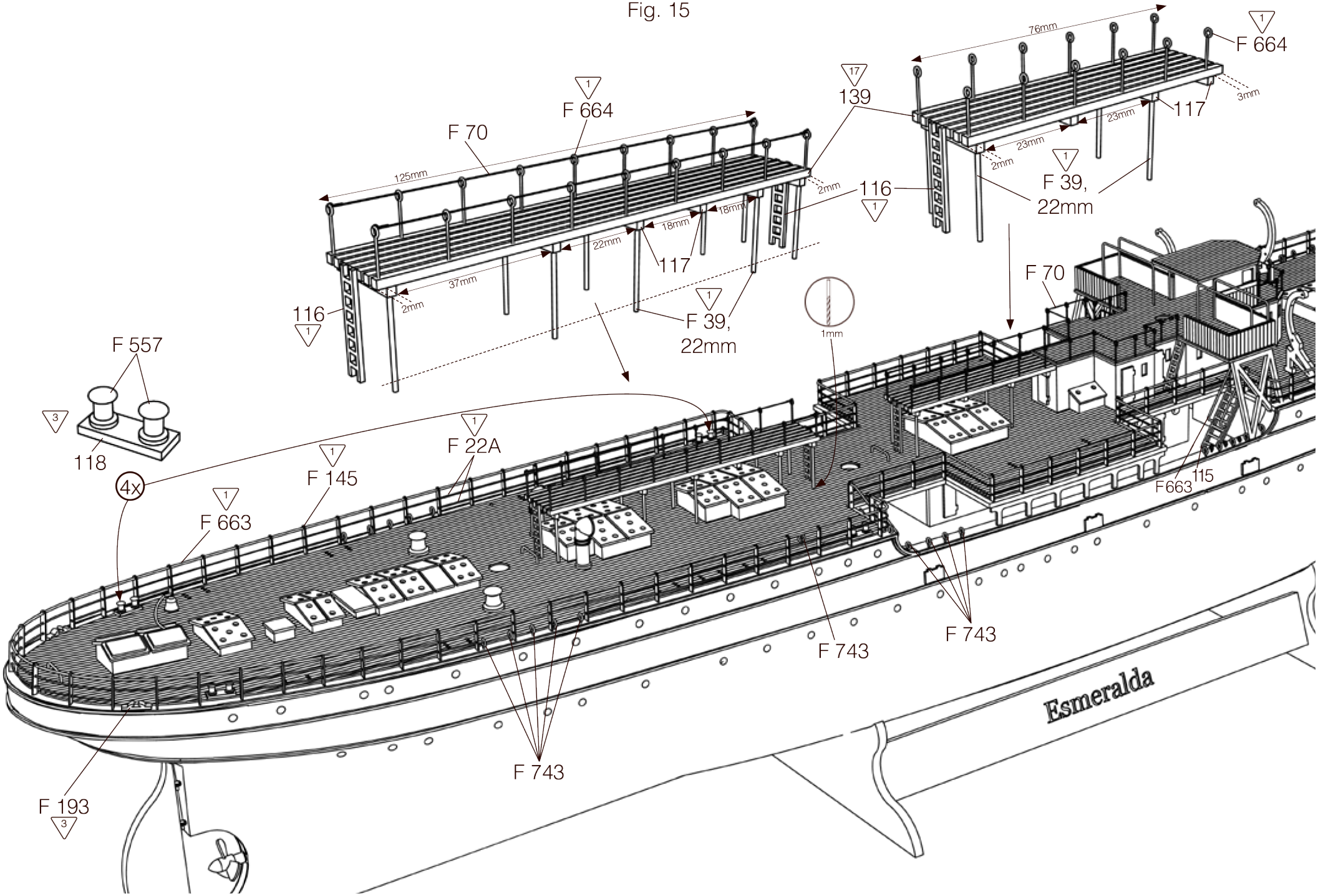

F 664
F 70
125mm
139
76mm
117
3mm
23mm
2mm
F 39,
22mm
116
18mm
22mm
37mm
1mm
F 557
118
4x
F 22A
F 145
F 663
F 743
F 193
Esmeralda
115

Fig. 16

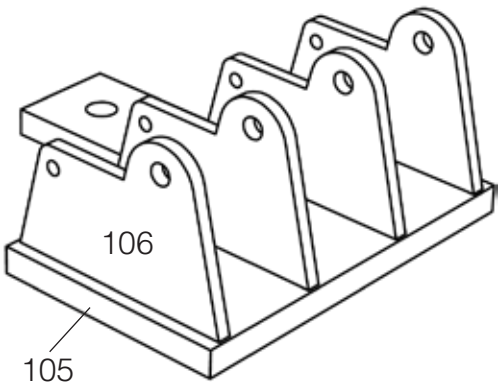
106
105

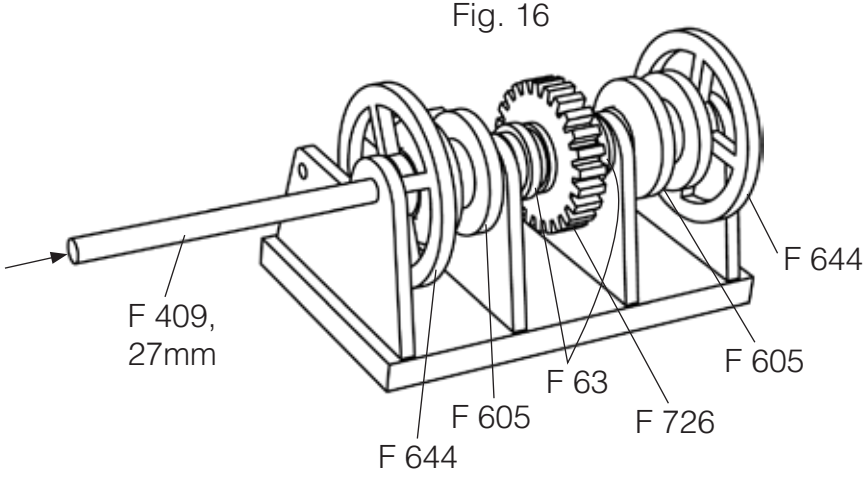
F 409,
27mm
F 644
F 605
F 63
F 726
F 605
F 644

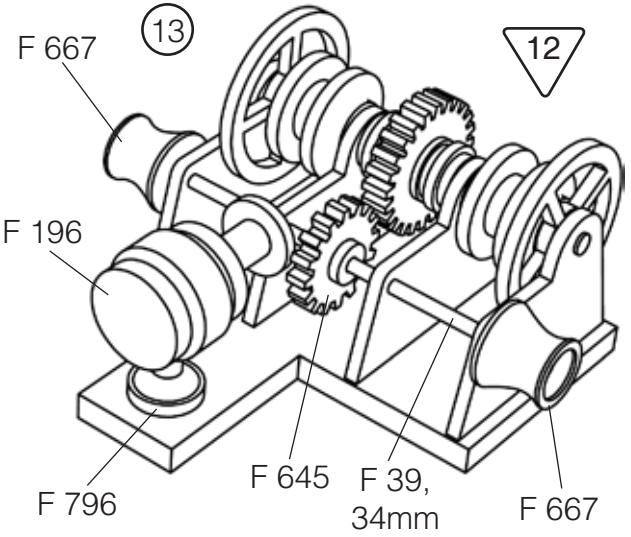
13
12
F 667
F 196
F 796
F 645
F 39,
34mm
F 667

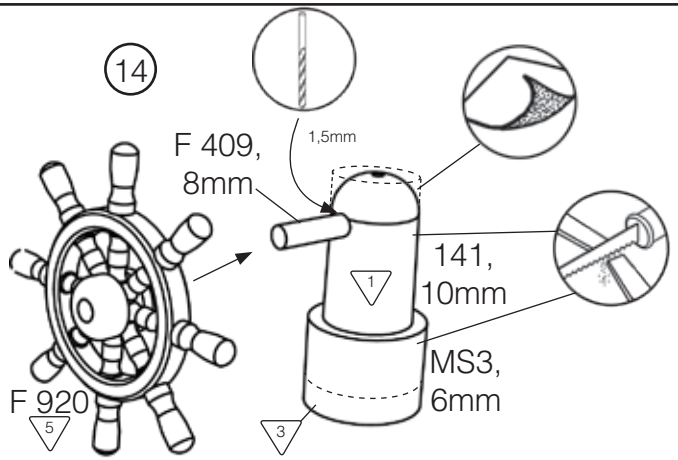
14
F 409,
8mm
1,5mm
141,
10mm
MS3,
6mm
F 920
5
1
3

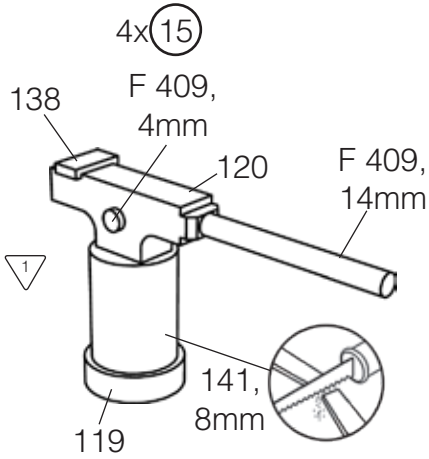
4x 15
138
F 409,
4mm
120
F 409,
14mm
141,
8mm
119
1

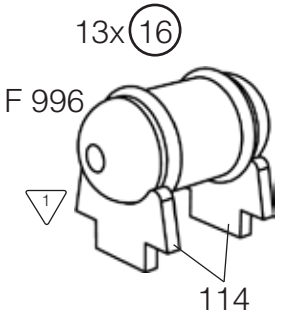
13x 16
F 996
114
1

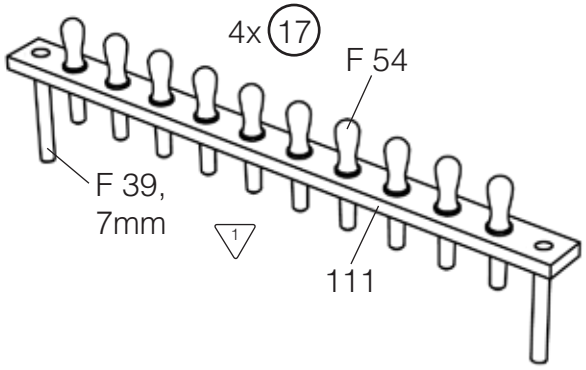
4x 17
F 54
F 39,
7mm
111
1

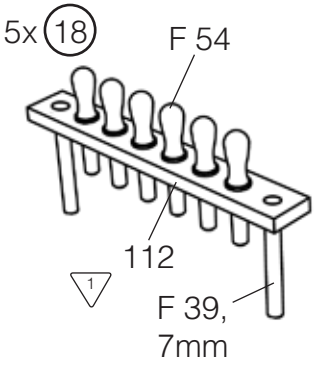
5x 18
F 54
112
F 39,
7mm
1

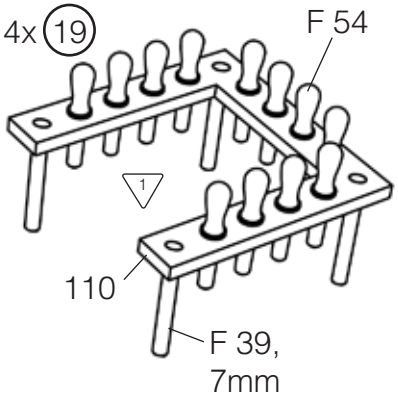
4x 19
F 54
110
F 39,
7mm
1

Fig. 17

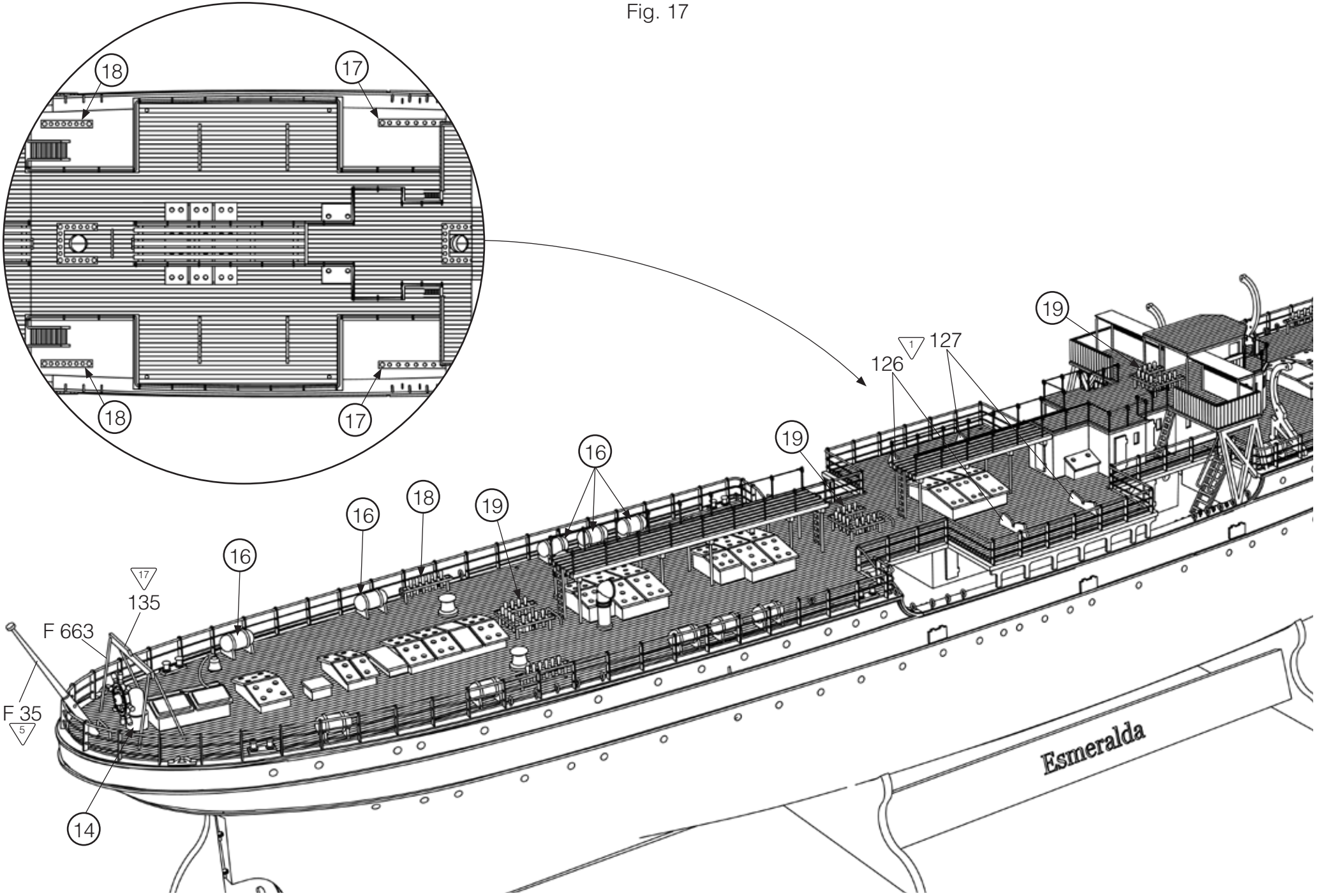
18
17
18
17
19
1
127
126
19
16
18
19
16
16
17
135
F 663
F 35
5
14
Esmeralda

Fig. 18

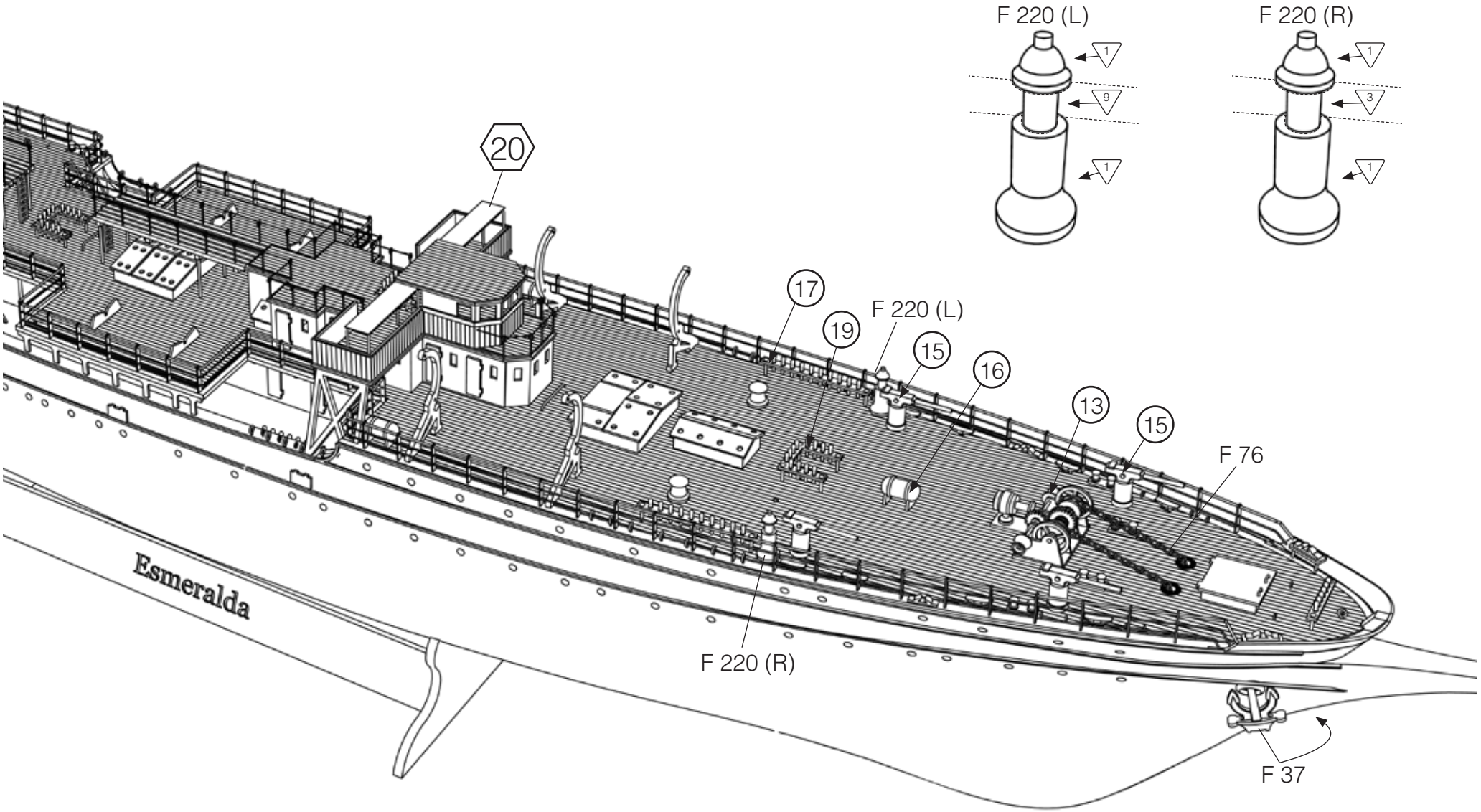
F 220 (L)
F 220 (R)
1
9
1
1
3
1
20
17
19
F 220 (L)
15
16
13
15
F 76
Esmeralda
F 220 (R)
F 37

Fig. 19

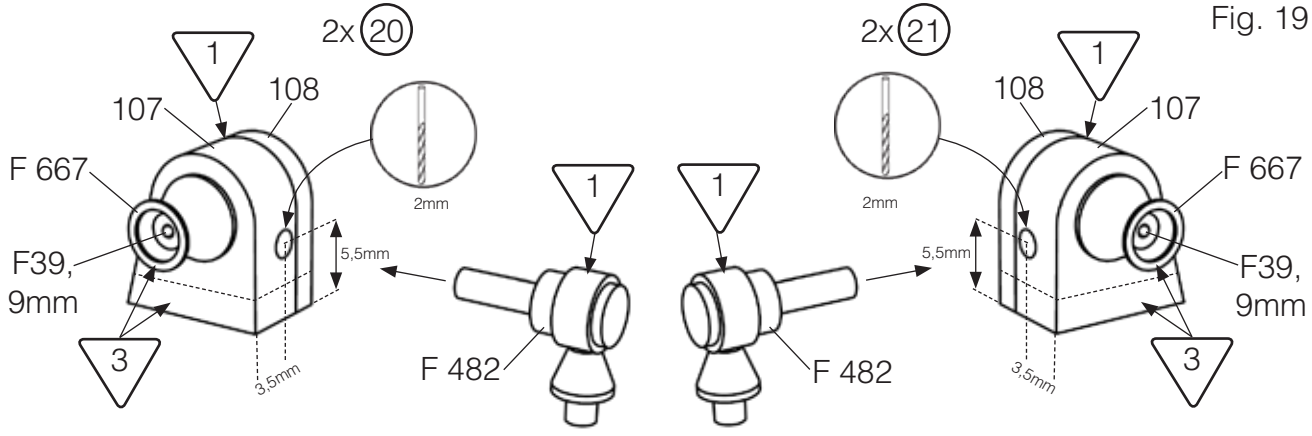
2x 20
1
107
108
F 667
F39,
9mm
3
2mm
5,5mm
3,5mm
F 482
2x 21
1
108
107
F 667
F39,
9mm
3
2mm
5,5mm
3,5mm
F 482

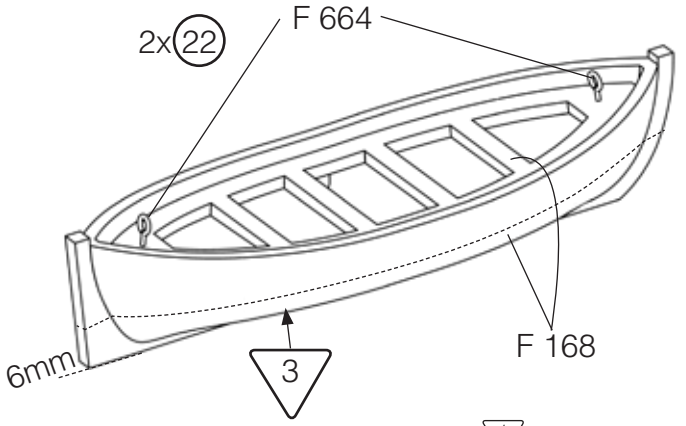
2x 22
F 664
F 168
6mm
3

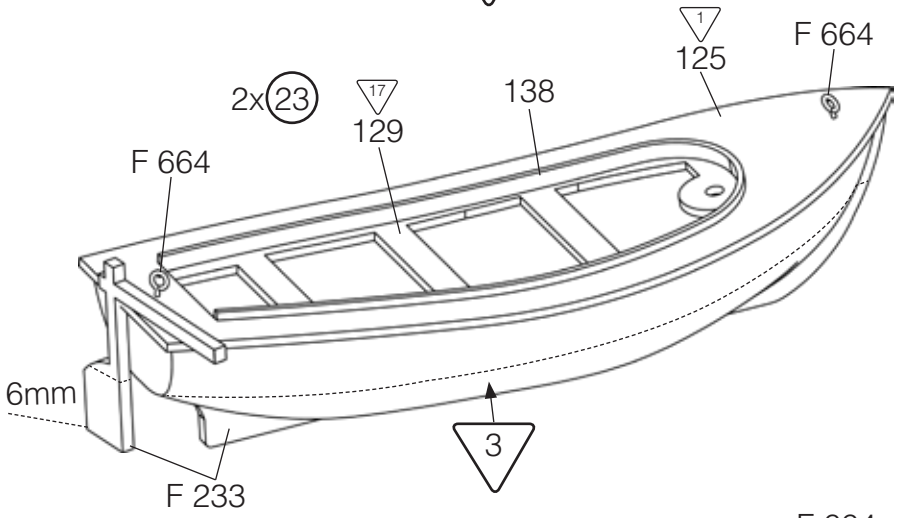
2x 23
1
125
F 664
17
129
138
F 664
6mm
3
F 233

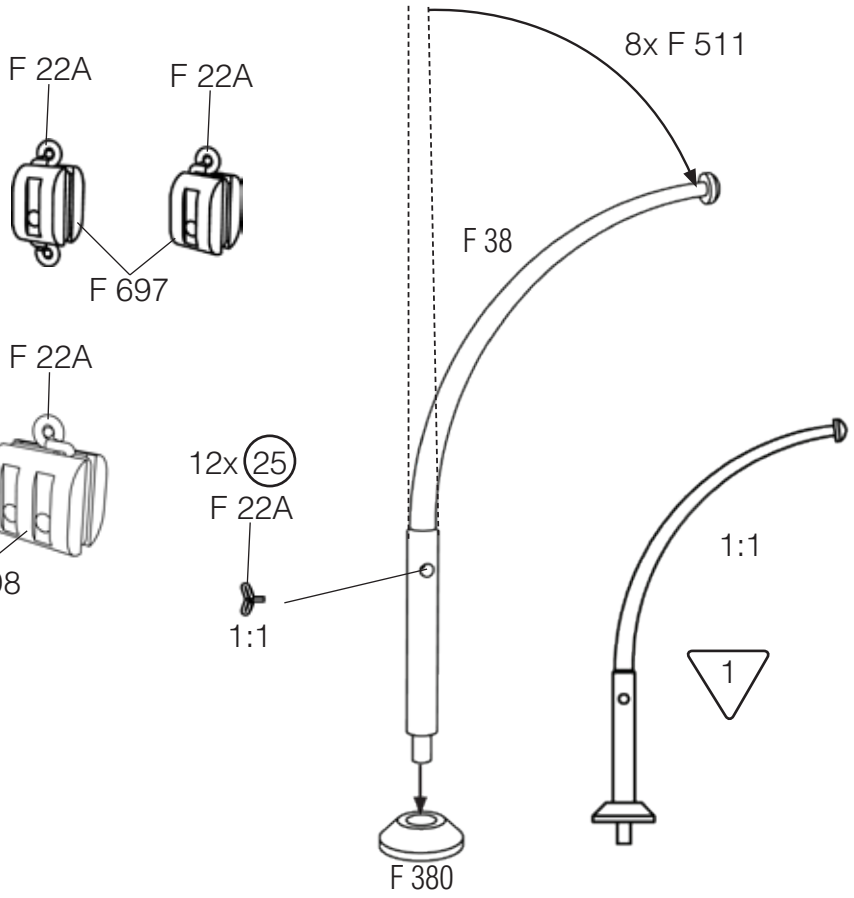
F 22A
F 22A
F 697
8x F 511
F 38
F 22A
F 698
12x 25
F 22A
1:1
1:1
1
F 380

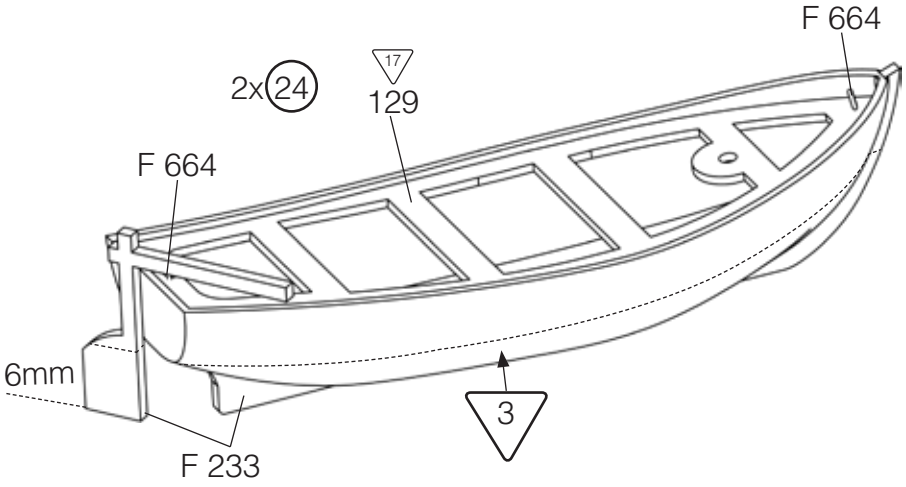
F 664
2x 24
17
129
F 664
6mm
3
F 233

Fig. 20

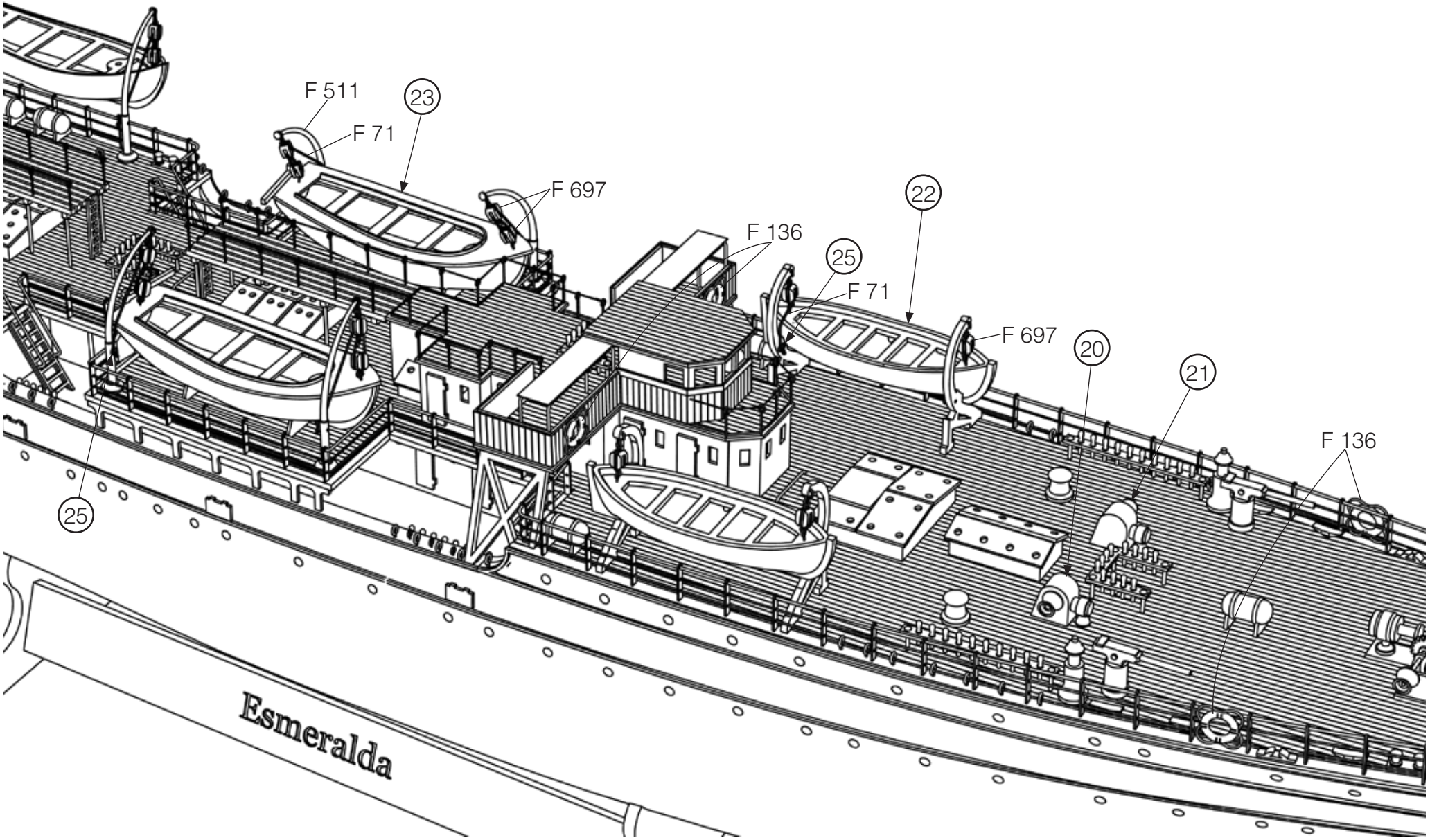

Fig. 21

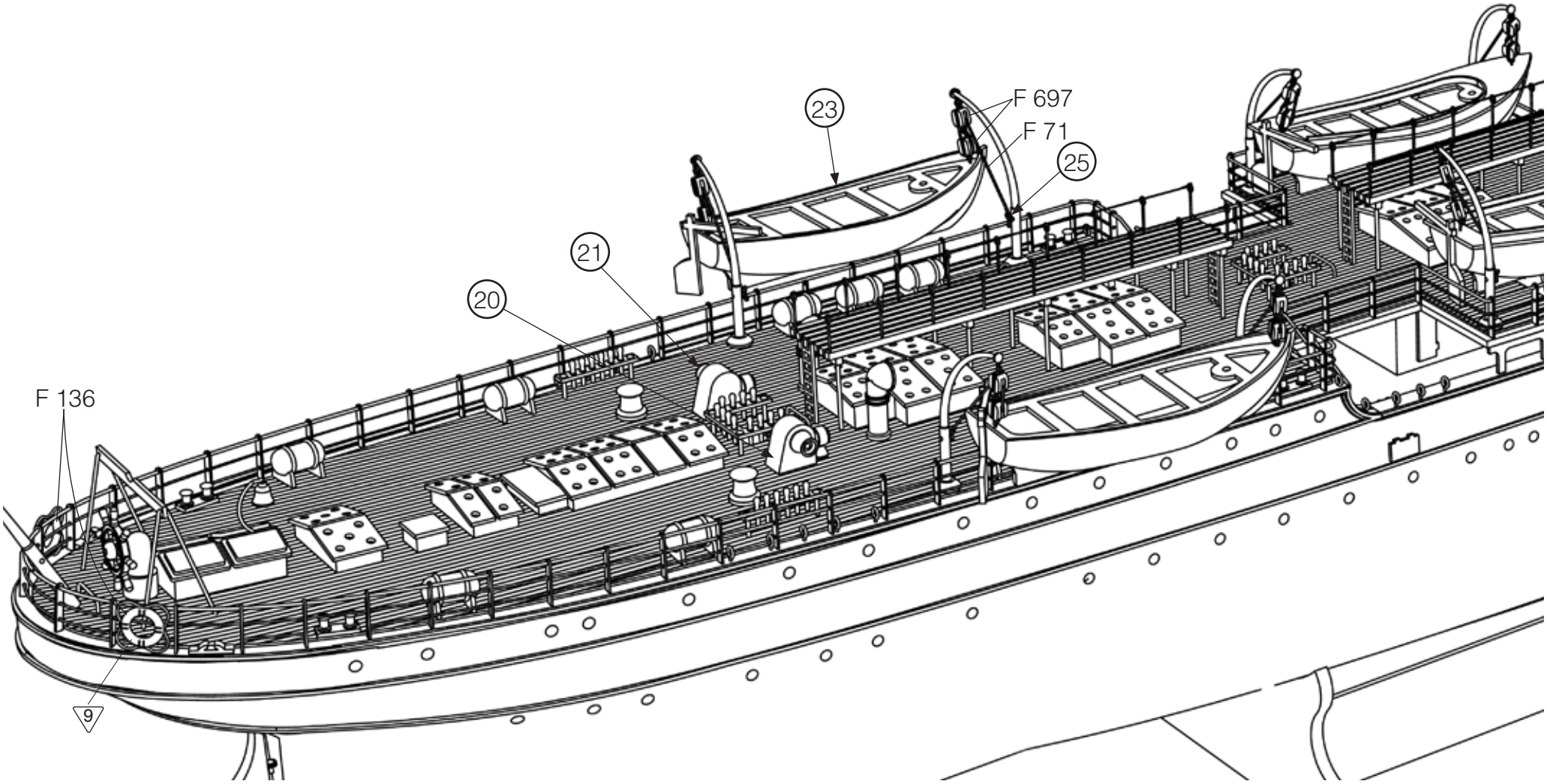

Fig. 22

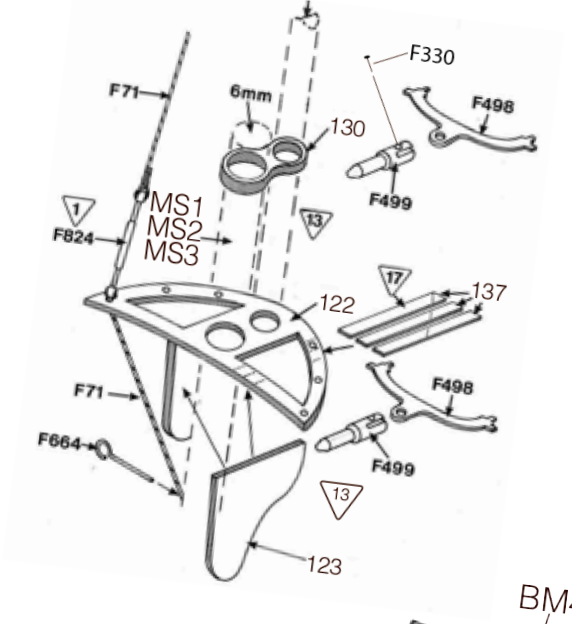
F71
6mm
F330
130
F498
F499
MS1
MS2
MS3
F824
122
137
F71
F498
F664
F499
123

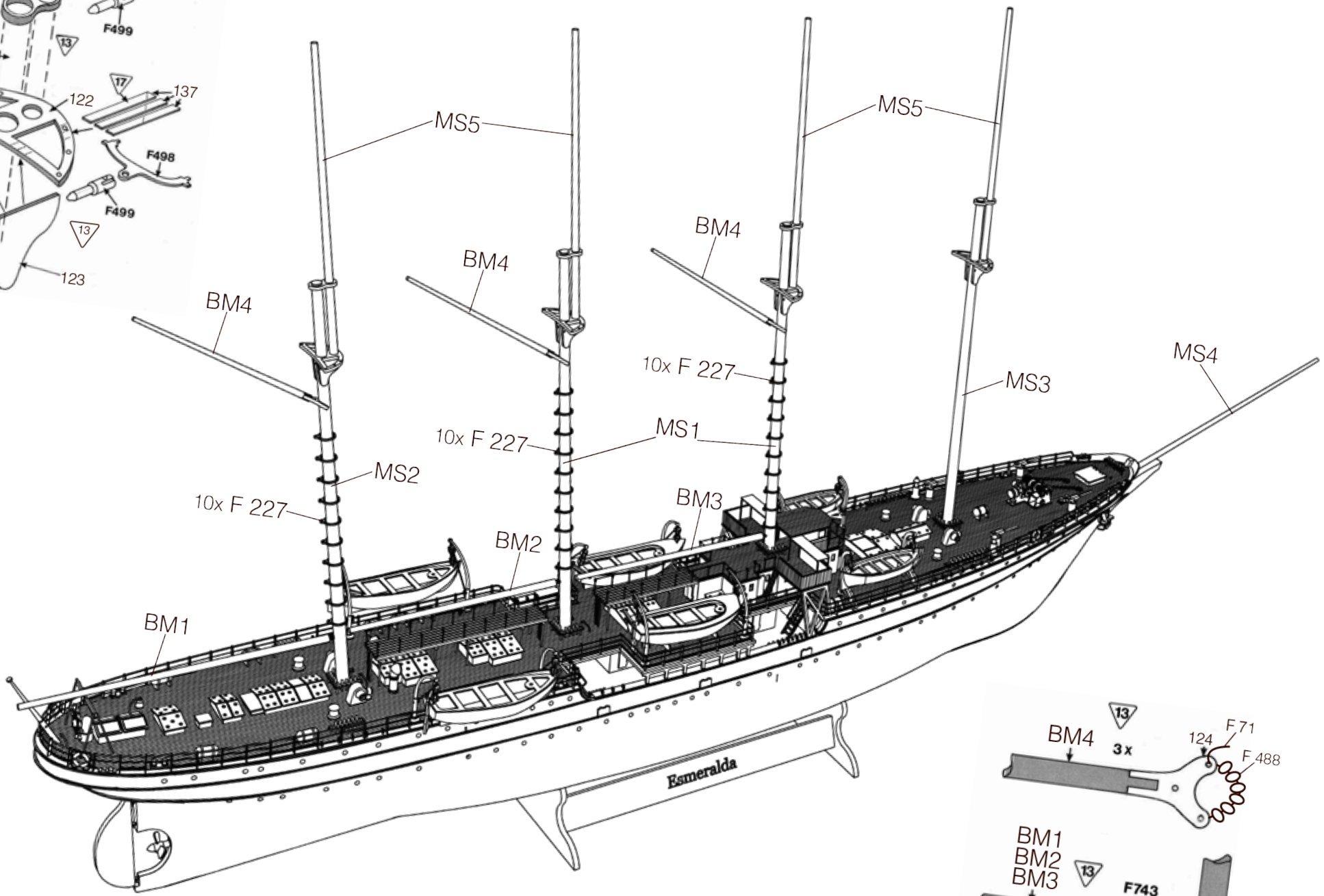
MS5
MS5
BM4
BM4
BM4
10x F 227
MS4
MS3
10x F 227
MS1
MS2
10x F 227
BM3
BM2
BM1
Esmeralda


BM4
3x
124
F 71
F 488
BM1
BM2
BM3
F743
3x

Fig. 23

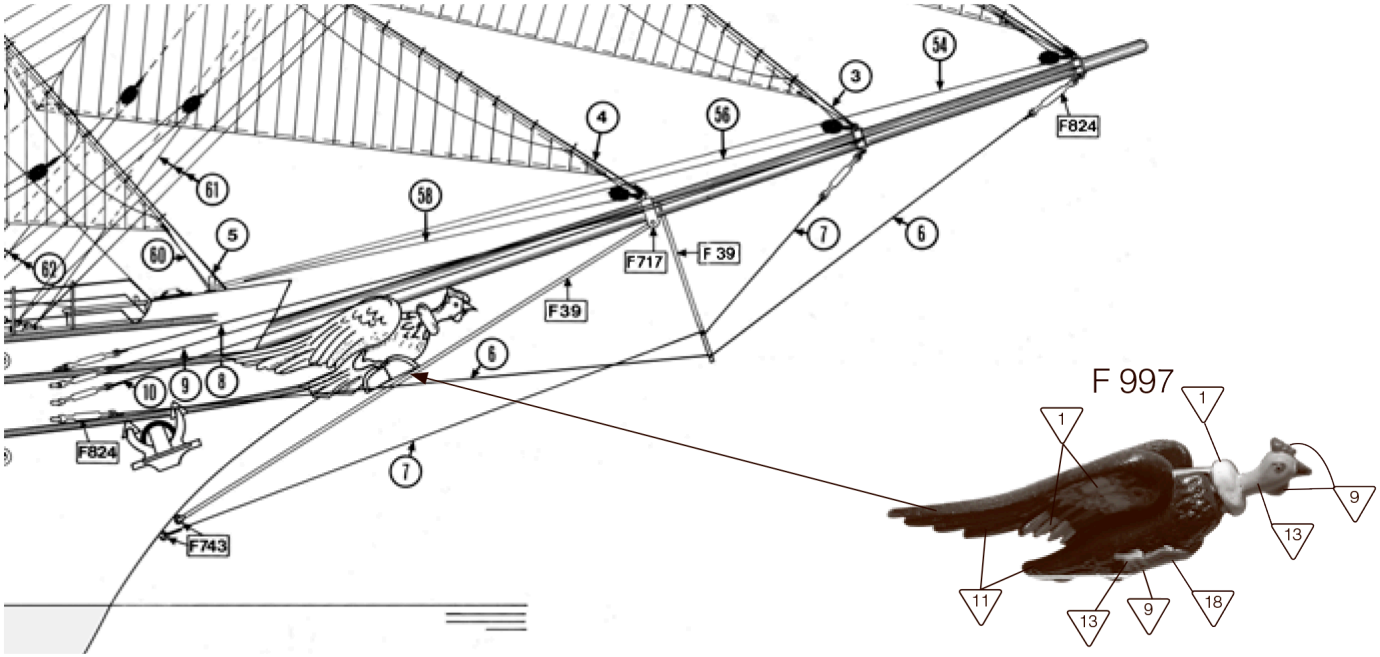





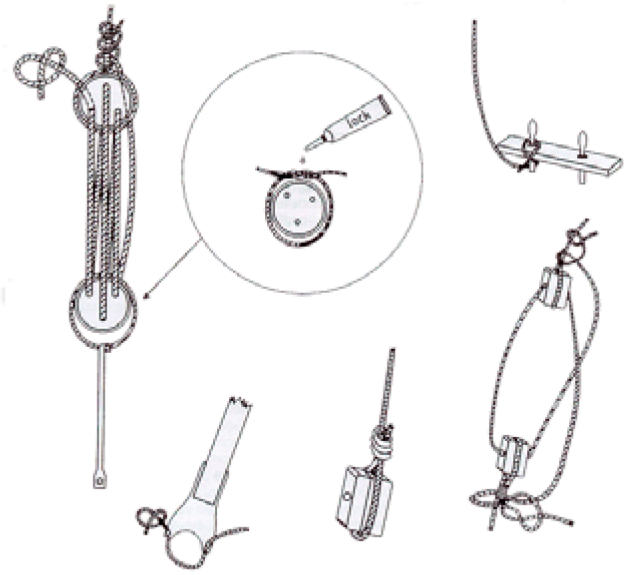

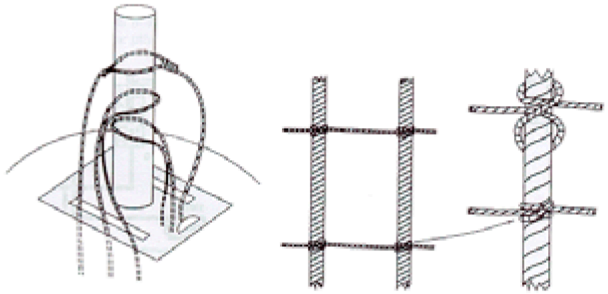

Visit also
www.esmeralda.cl
for more info

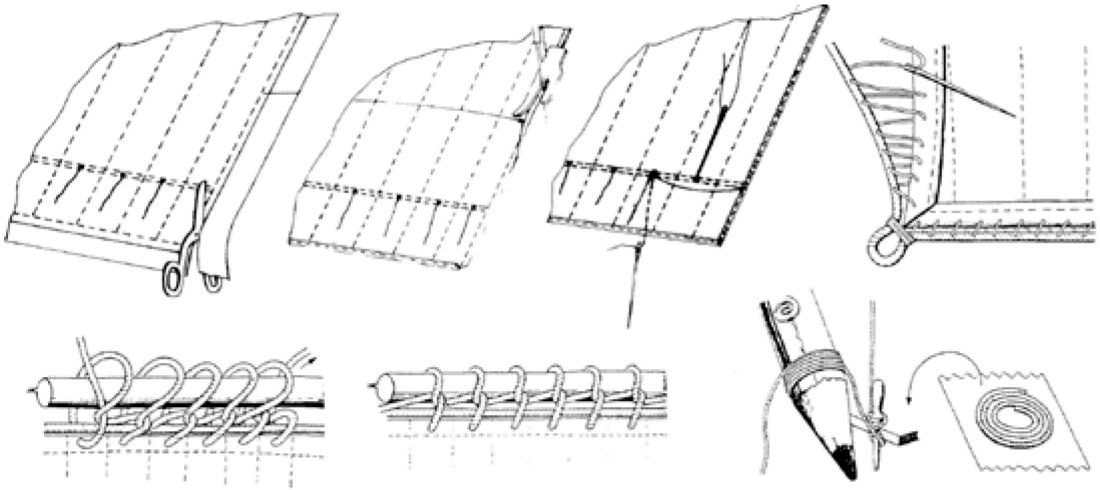

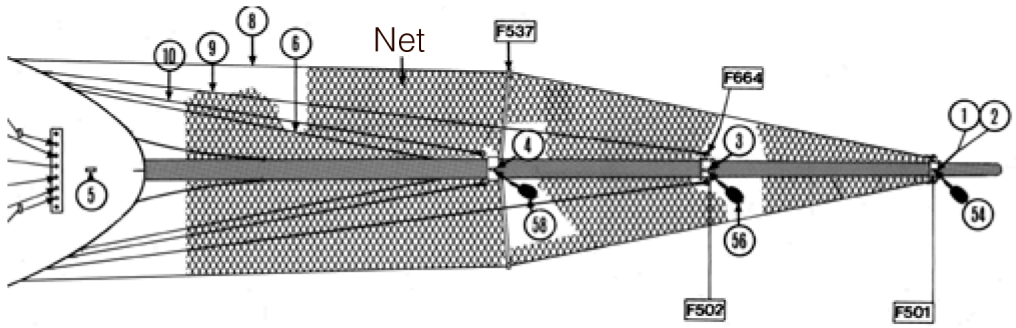

Fig. 24

1 : 1

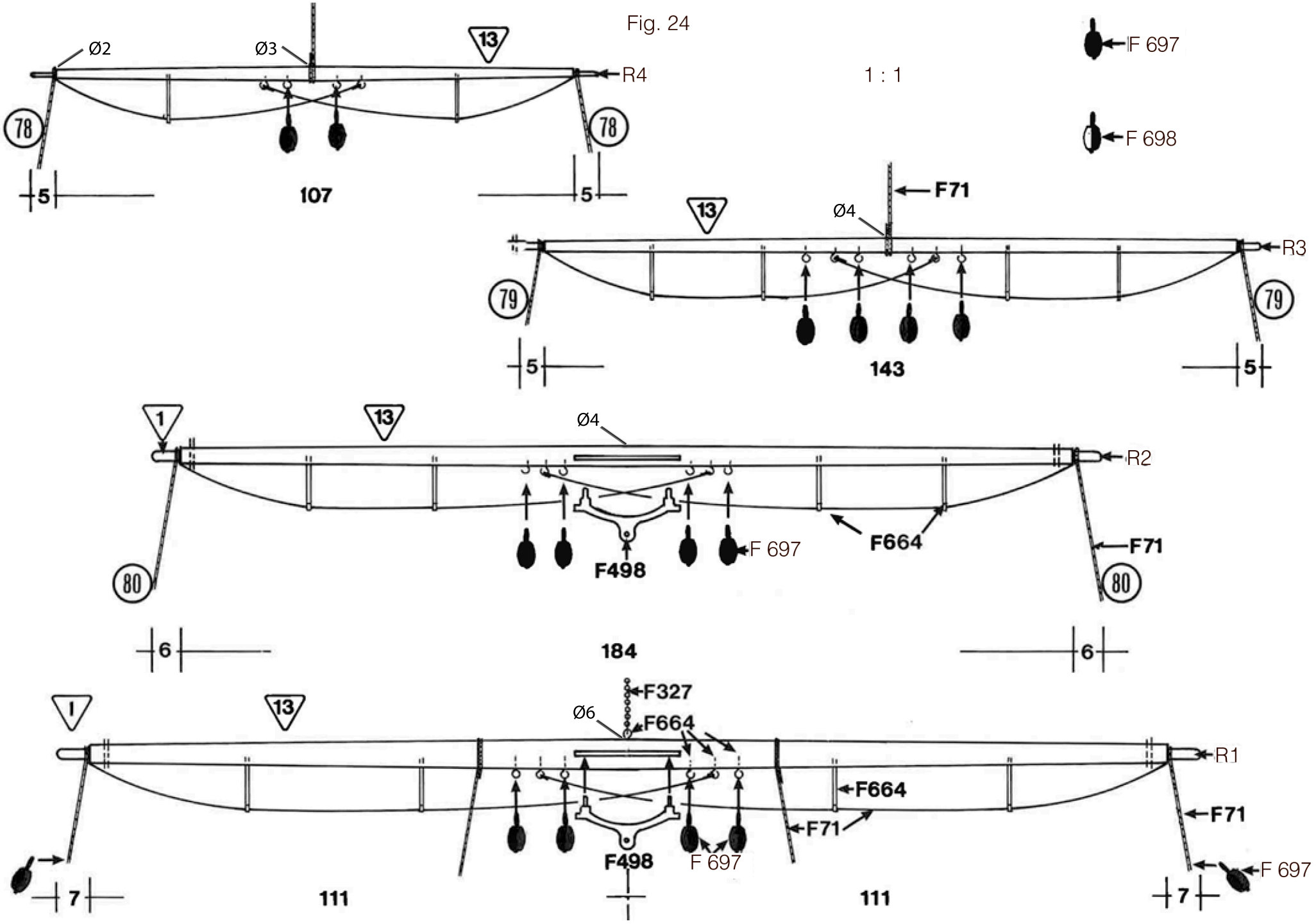
Ø2
Ø3
13
R4
78
78
5
107
5
F 697
F 698
F71
Ø4
13
R3
79
79
5
143
5
1
13
Ø4
R2
F 697
F498
F664
F71
80
80
6
184
6
1
13
F327
Ø6
F664
R1
F664
F71
F71
F498
F 697
F 697
7
111
111
7

Fig. 25

billede af rigning

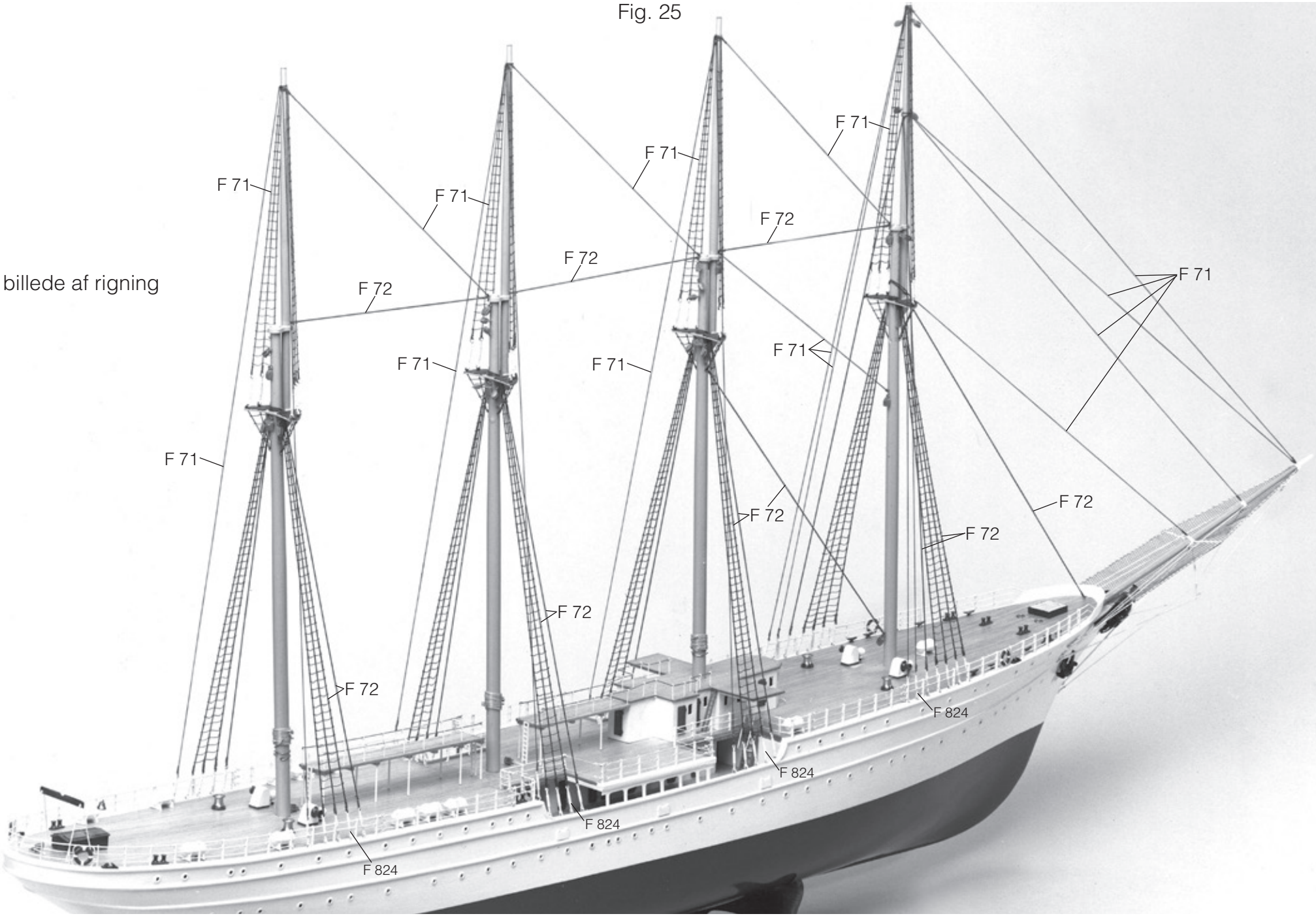

RIGGING OVERVIEW

| | |
|---|---|
| 1 | F 71 |
| 2 | F 71 |
| 3 | F 71 |
| 4 | F 71 |
| 5 | F 72 |
| 6 | F 71 |
| 7 | F 71 |
| 8 | F 71 |
| 9 | F 71 |
| 10 | F 71 |
| 11 | F 72 |
| 12 | F 72 |
| 13 | F 72 |
| 14 | F 72 |
| 15 | F 72 |
| 16 | F 71 |
| 17 | F 71 |
| 18 | F 71 |
| 19 | F 71 |
| 20 | F 71 |
| 21 | F 72 |
| 22 | F 71 |
| 23 | F 72 |
| 24 | F 71 |
| 25 | F 71 |
| 26 | F 72 |
| 27 | F 72 |
| 28 | F 72 |
| 29 | F 72 |
| 30 | F 71 |
| 31 | F 71 |
| 32 | F 71 |
| 33 | F 71 |
| 34 | F 72 |
| 35 | F 72 |
| 36 | F 72 |
| 37 | F 72 |
| 38 | F 71 |
| 39 | F 71 |
| 40 | F 71 |
| | |

| | |
|---|---|
| 41 | F 72 |
| 42 | F 71 |
| 43 | F 71 |
| 44 | F 72 |
| 45 | F 72 |
| 46 | F 72 |
| 47 | F 72 |
| 48 | F 71 |
| 49 | F 71 |
| 50 | F 71 |
| 51 | F 72 |
| 52 | F 71 |
| 53 | F 71 |
| 54 | F 71 |
| 55 | F 71 |
| 56 | F 71 |
| 57 | F 71 |
| 58 | F 71 |
| 59 | F 71 |
| 60 | F 71 |
| 61 | F 71 |
| 62 | F 71 |
| 63 | F 71 |
| 64 | F 71 |
| 65 | F 71 |
| 66 | F 71 |
| 67 | F 71 |
| 68 | F 71 |
| 69 | F 71 |
| 70 | F 71 |
| 71 | F 71 |
| 72 | F 71 |
| 73 | F 71 |
| 74 | F 71 |
| 75 | F 71 |
| 76 | F 71 |
| 77 | F 71 |
| 78 | F 71 |
| 79 | F 71 |
| 80 | F 71 |
| | |

| | |
|---|---|
| 81 | F 71 |
| 82 | F 71 |
| 83 | F 71 |
| 84 | F 71 |
| 85 | F 71 |
| 86 | F 71 |
| 87 | F 71 |
| 88 | F 71 |
| 89 | F 71 |
| 90 | F 71 |
| 91 | F 71 |
| 92 | F 71 |
| 93 | F 71 |
| 94 | F 71 |
| 95 | F 71 |
| 96 | F 71 |
| 97 | F 71 |
| 98 | F 71 |
| 99 | F 71 |
| 100 | F 71 |
| 101 | F 71 |
| 102 | F 71 |
| 103 | F 71 |
| 104 | F 71 |
| 105 | F 71 |
| 106 | F 71 |
| 107 | F 71 |
| 108 | F 71 |
| 109 | F 71 |
| 110 | F 71 |
| 111 | F 71 |
| 112 | F 71 |
| 113 | F 71 |
| 114 | F 71 |
| 115 | F 71 |
| 116 | F 71 |
| 117 | F 71 |
| 118 | F 71 |
| 119 | F 71 |
| 120 | F 71 |
| 121 | F 71 |

Fig. 26

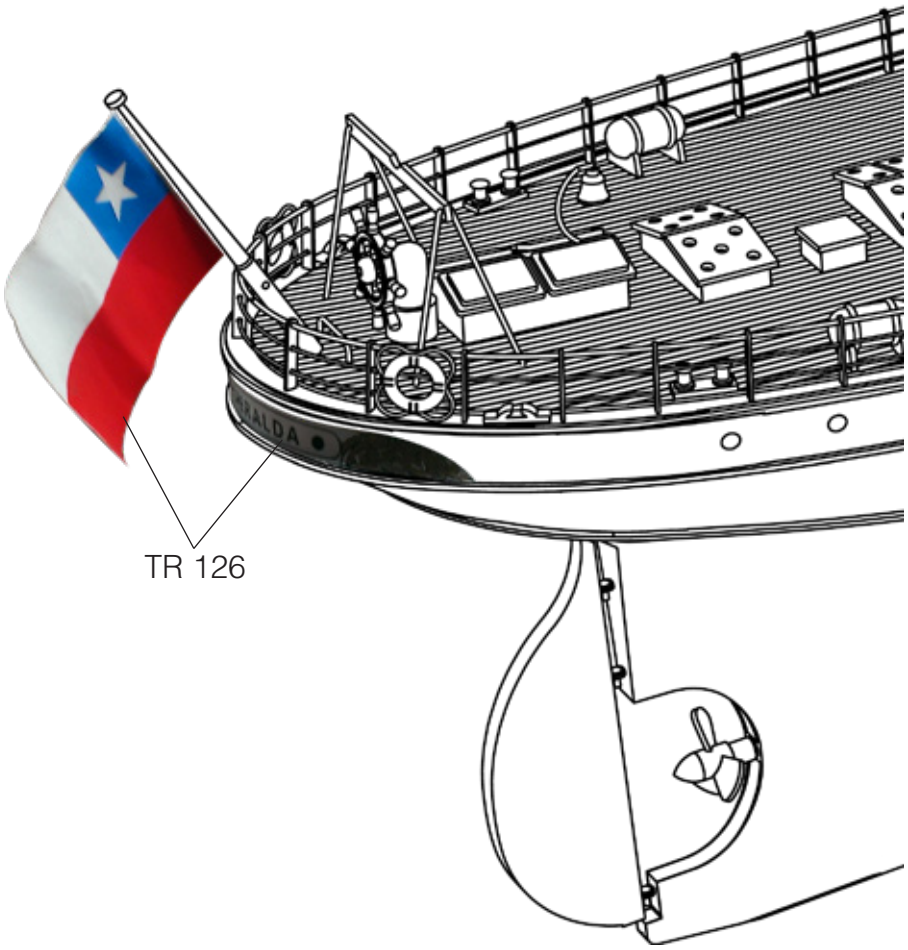

BF 1




BF2



LAS

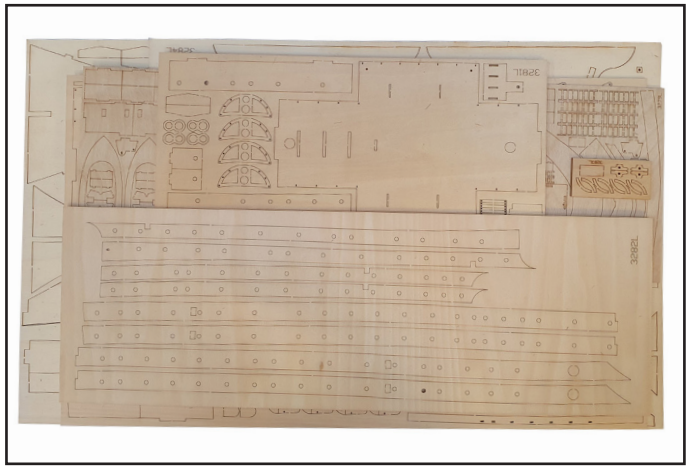

LB 1

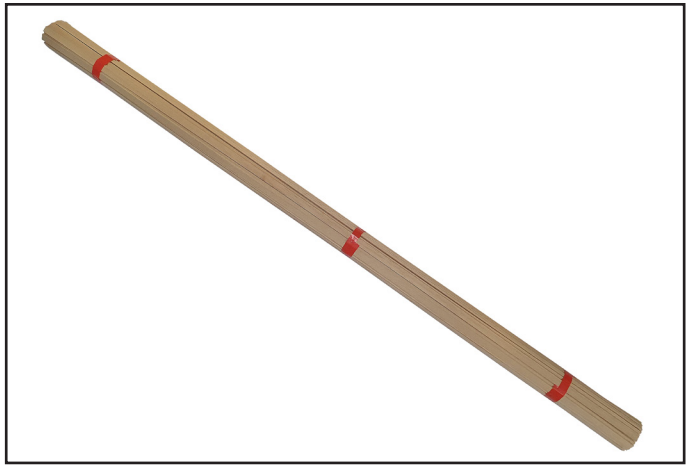

LB2

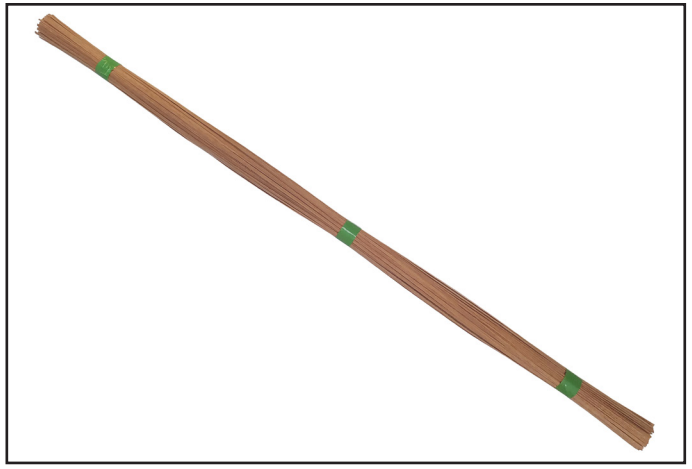

MS



TS 1



TS2




BILLING BOATS
DENMARK