SPARK XB6

# SERVO/RECEIVER BOX

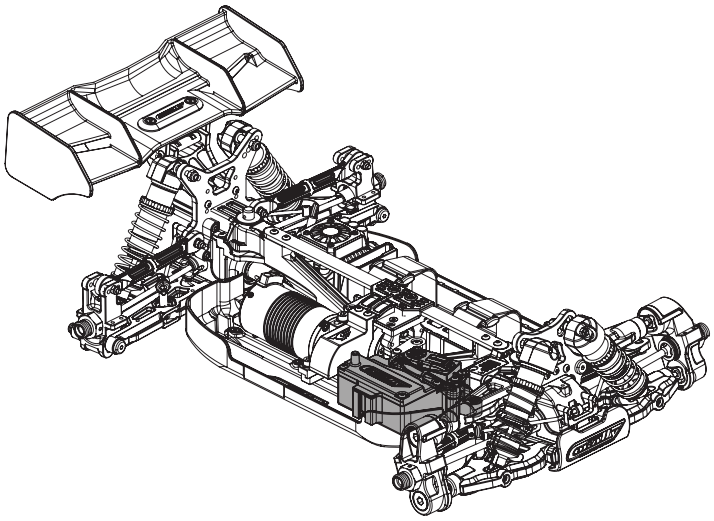

**Required Tools:**

- 2.0 Hex Driver
- 2.5 Nutdriver
- shock pliers

## STEP 1

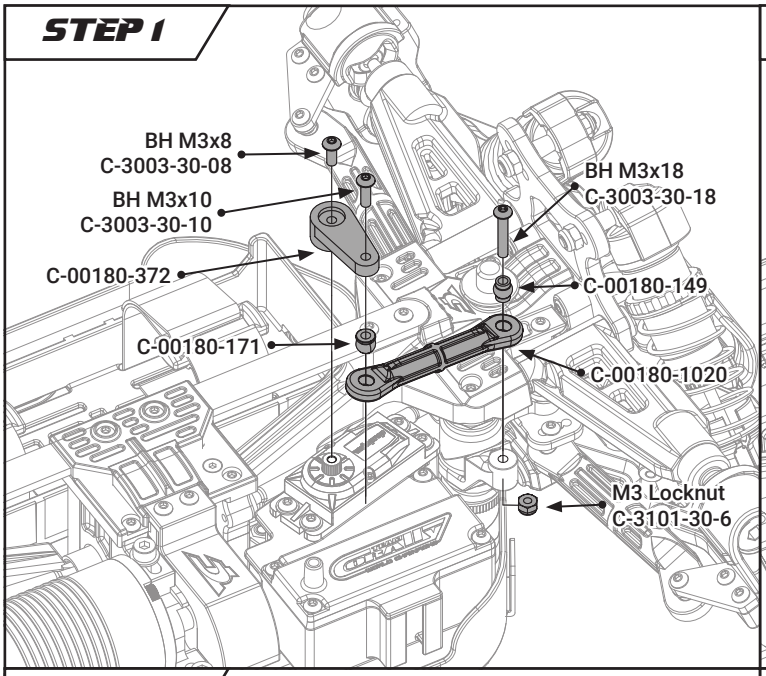


## STEP 2

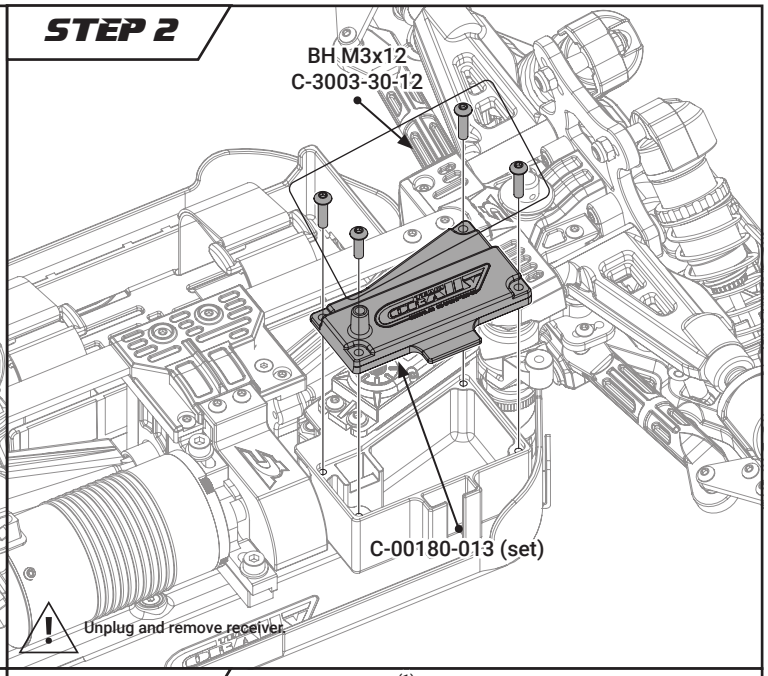


## STEP 3

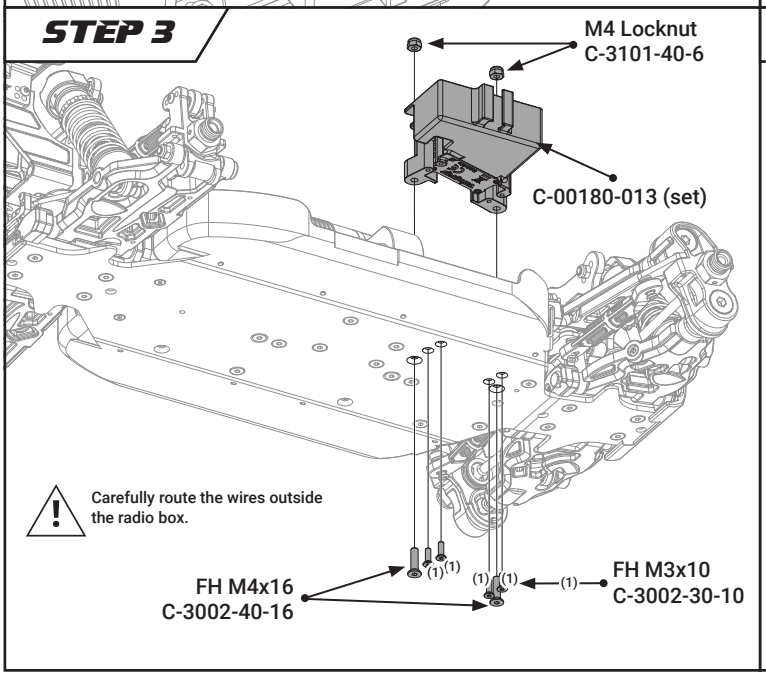

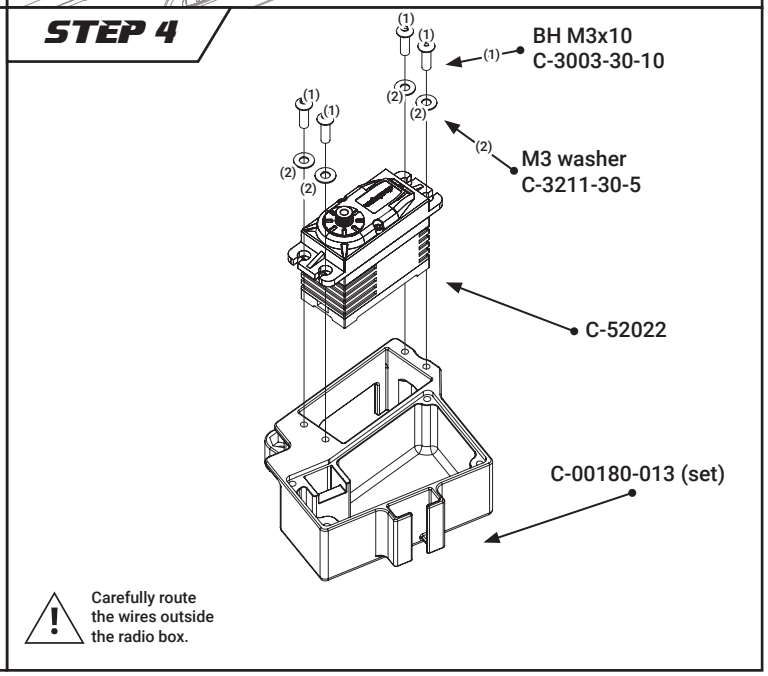
## STEP 4