SPARK XB6

BATTERY/ESC TRAY

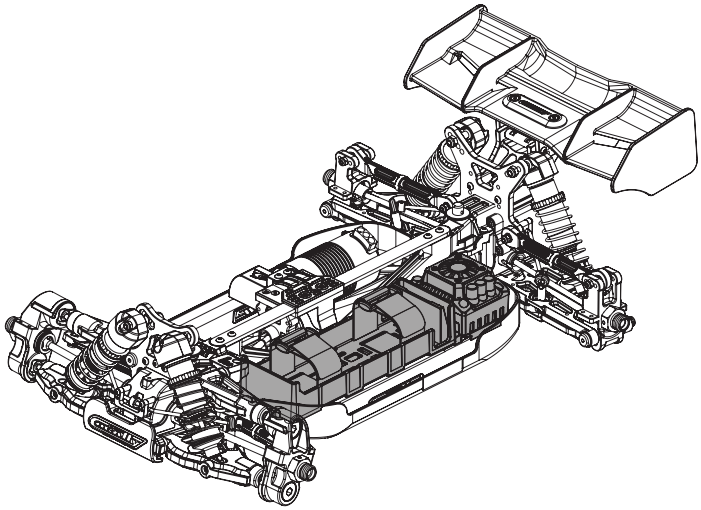

Required Tools:

- 2.0 Hex Driver
- 2.5 Hex Driver
- Double-side tape

Finish Before:

- Servo/Receiver Box

STEP 1

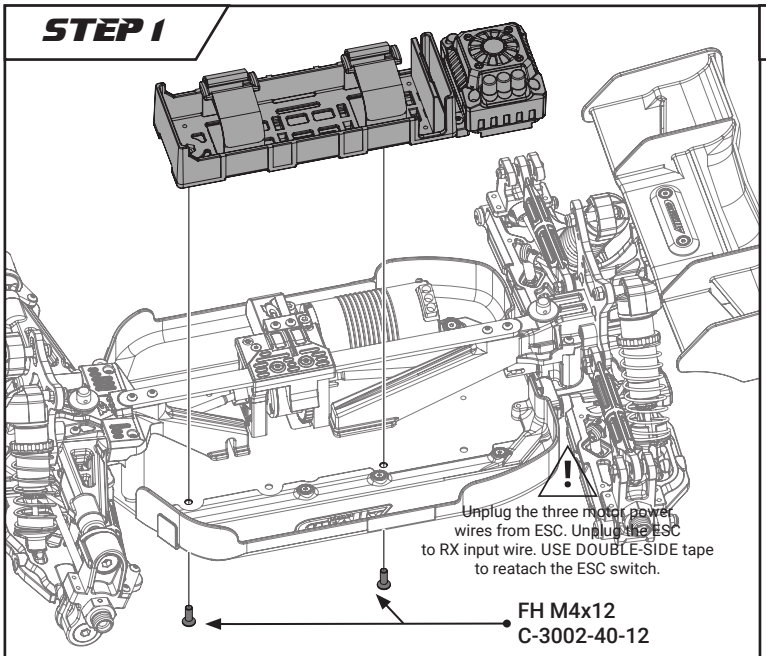

STEP 2

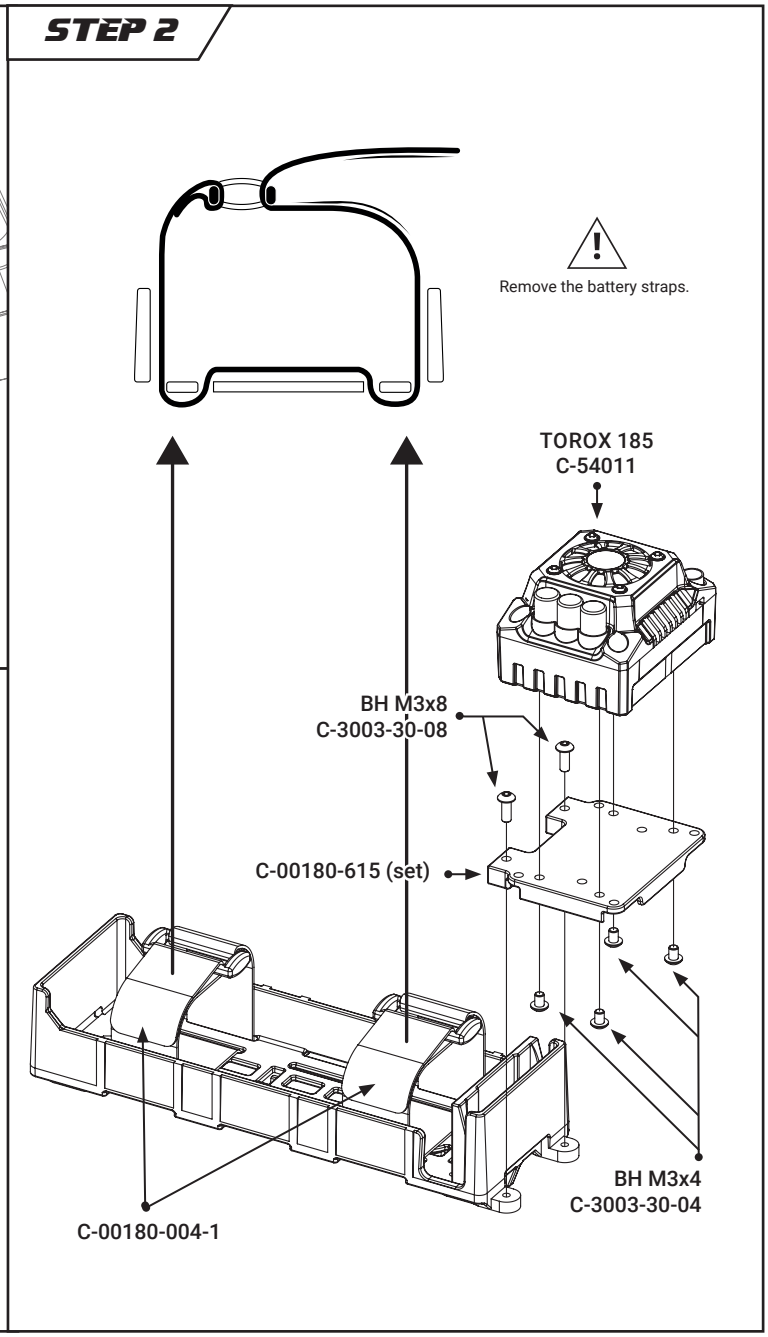
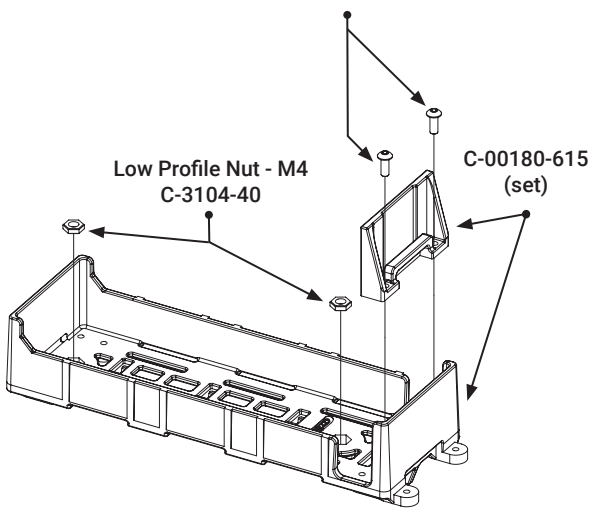
STEP 3