Billing Boats®

728 Colin Archer

Sailplan

Fig. 12

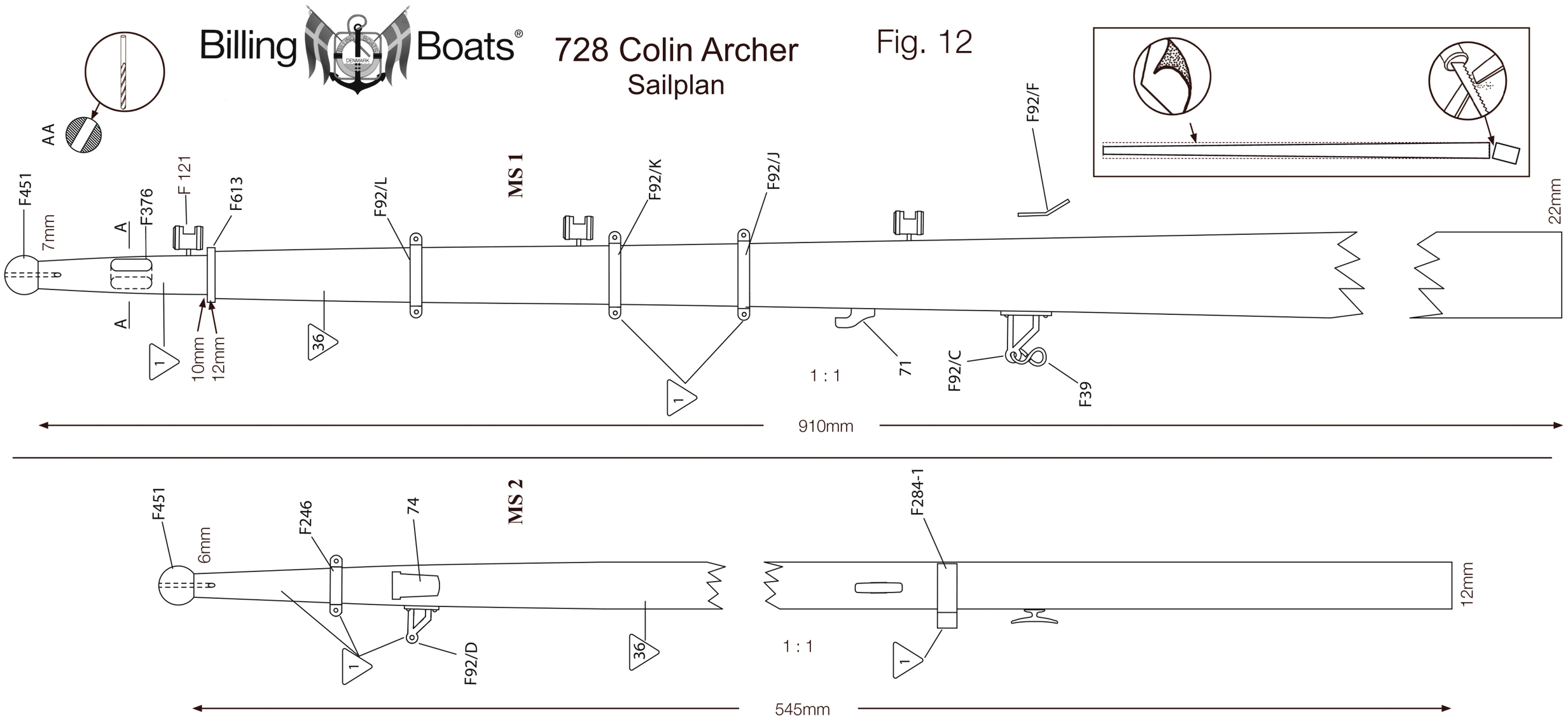

BM 2

Fig. 13

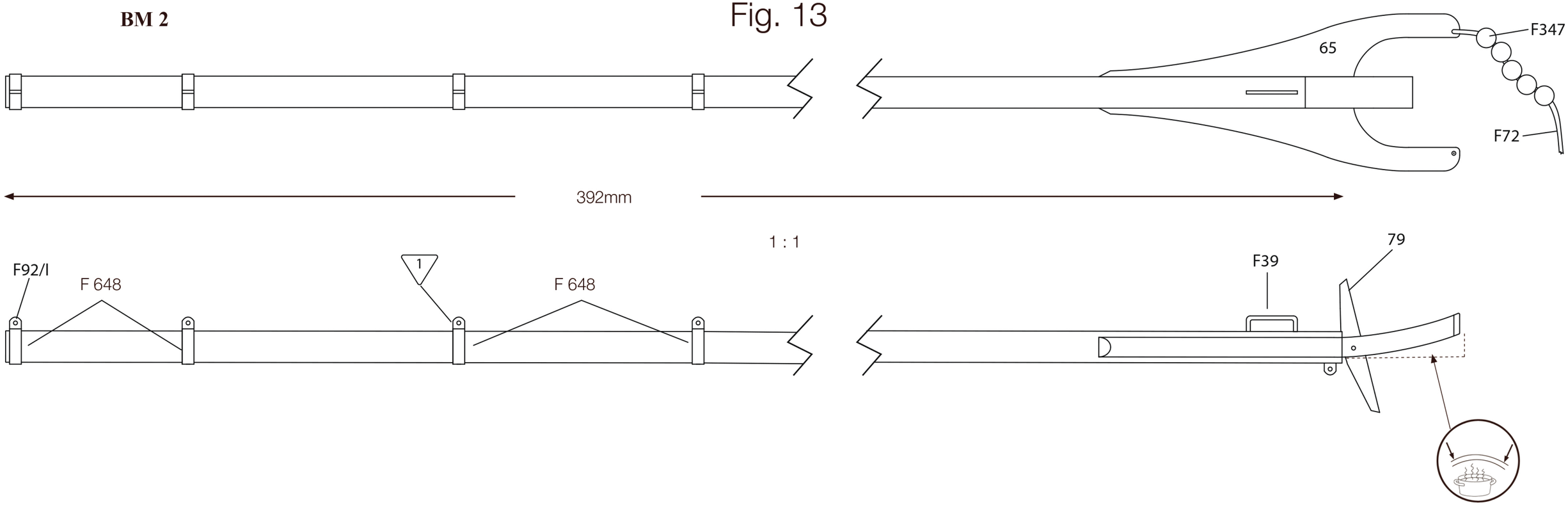

BM 1

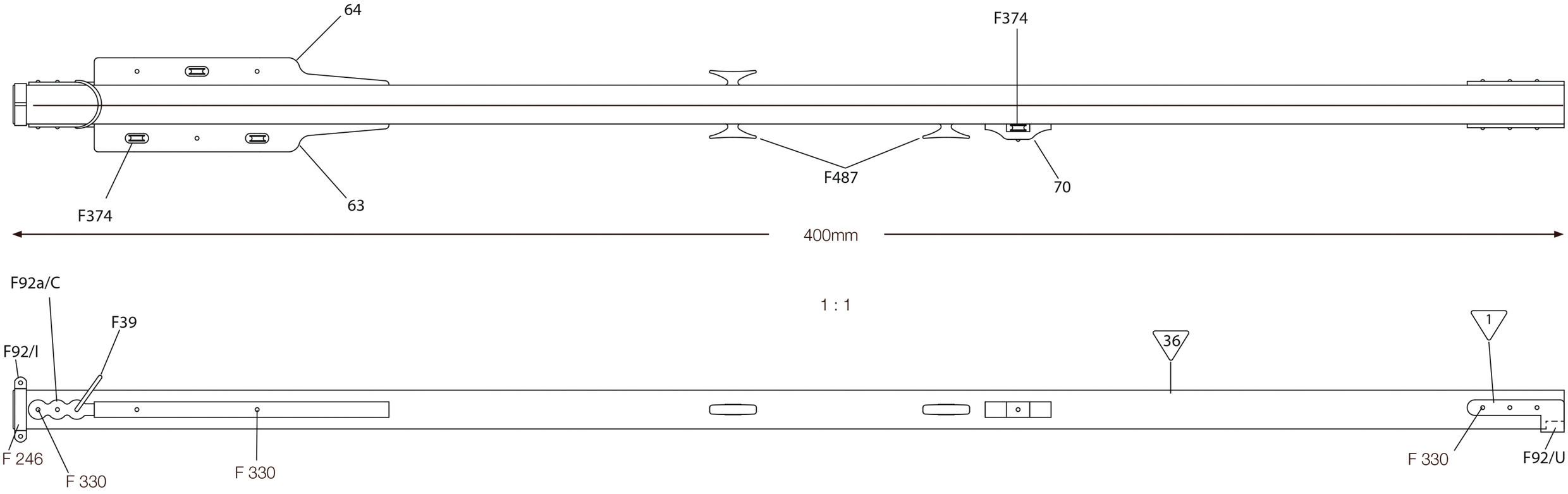

Fig. 14

BM 4

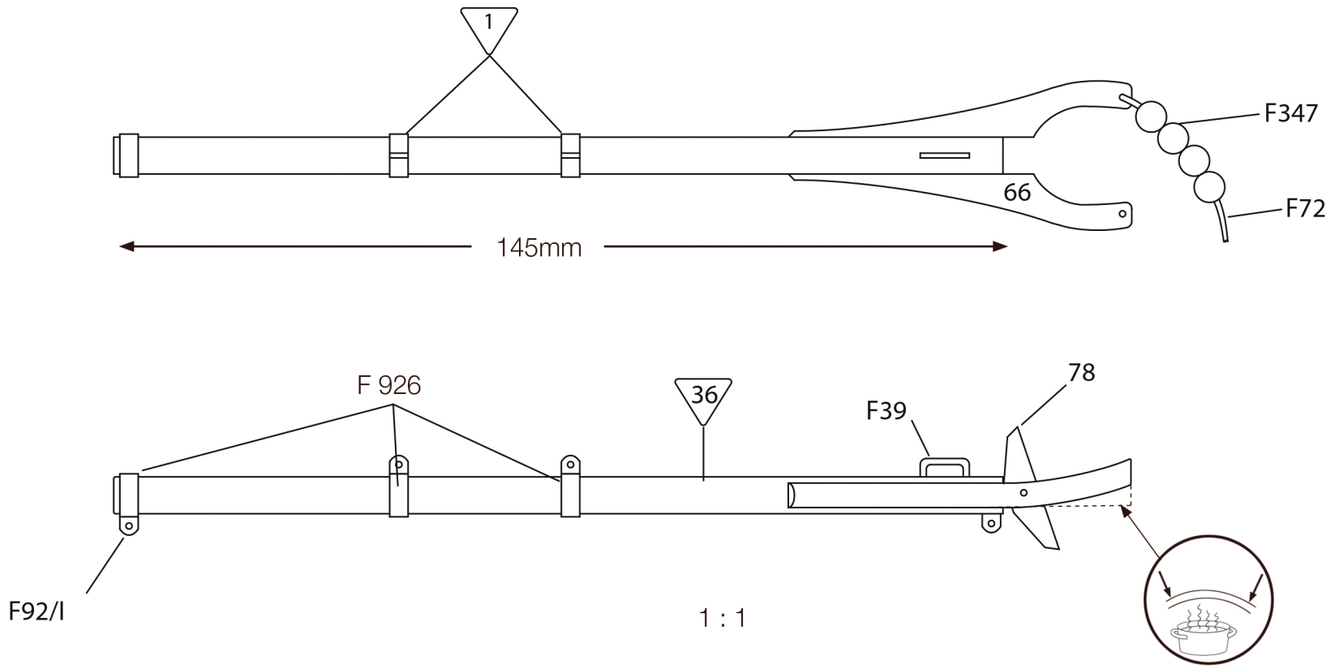

BM 3

