Billing Boats®

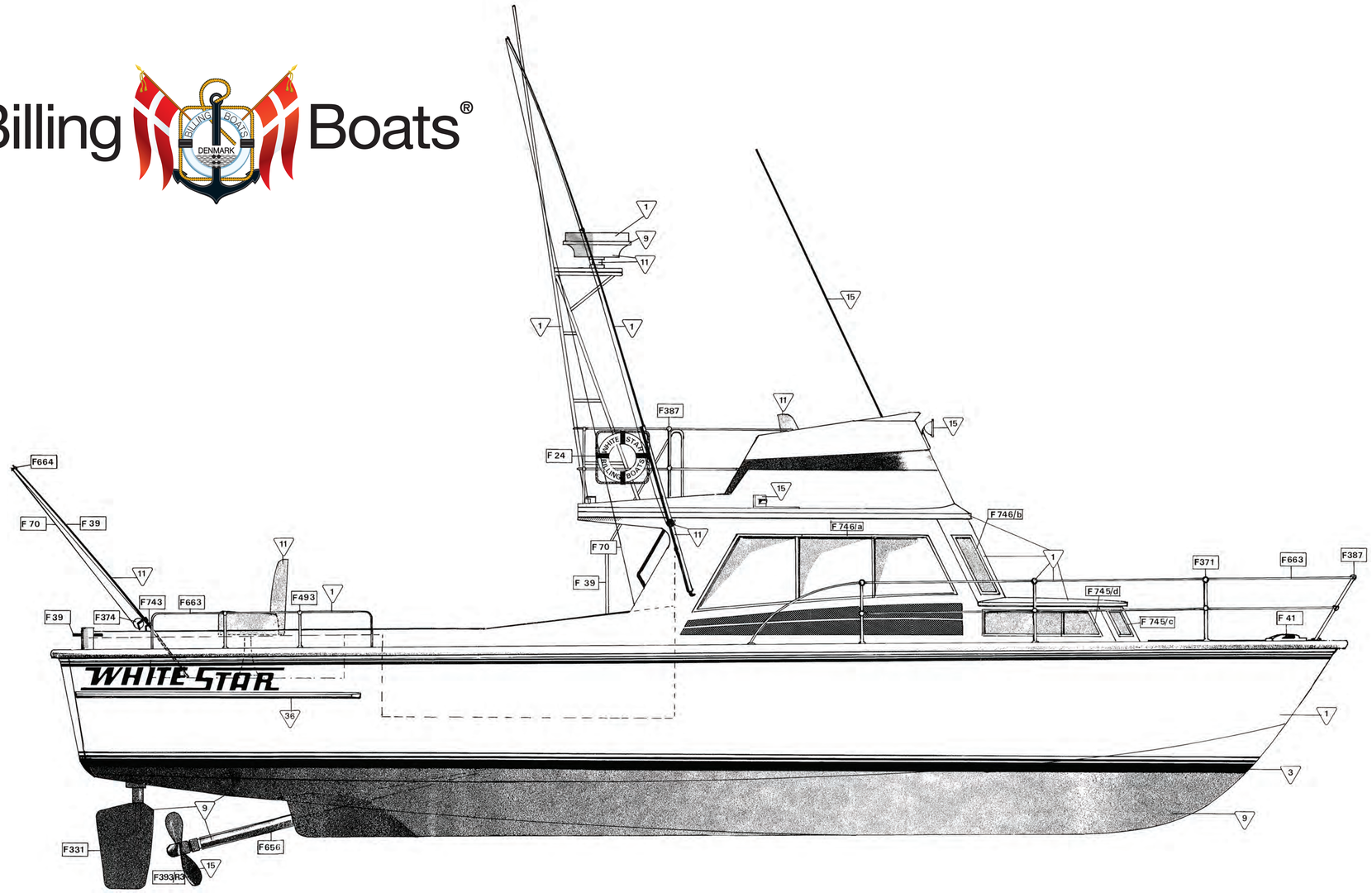

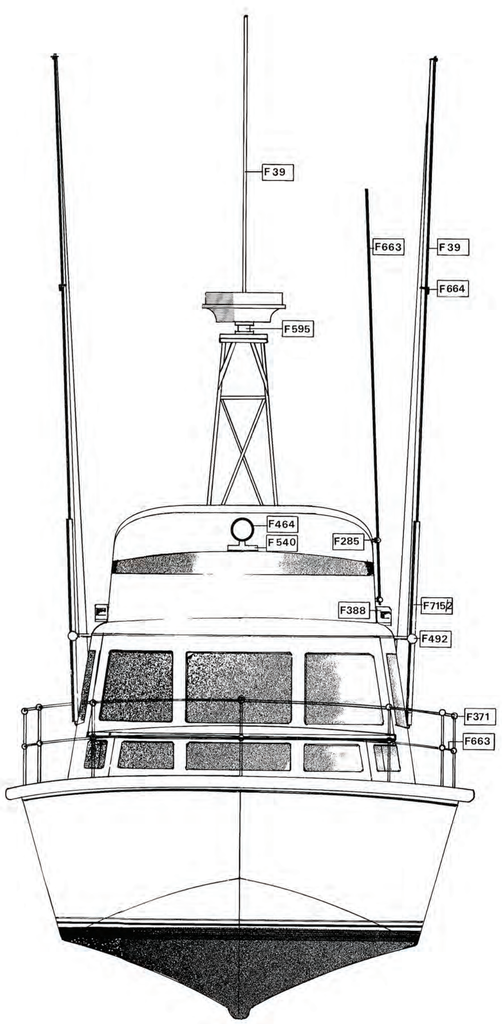

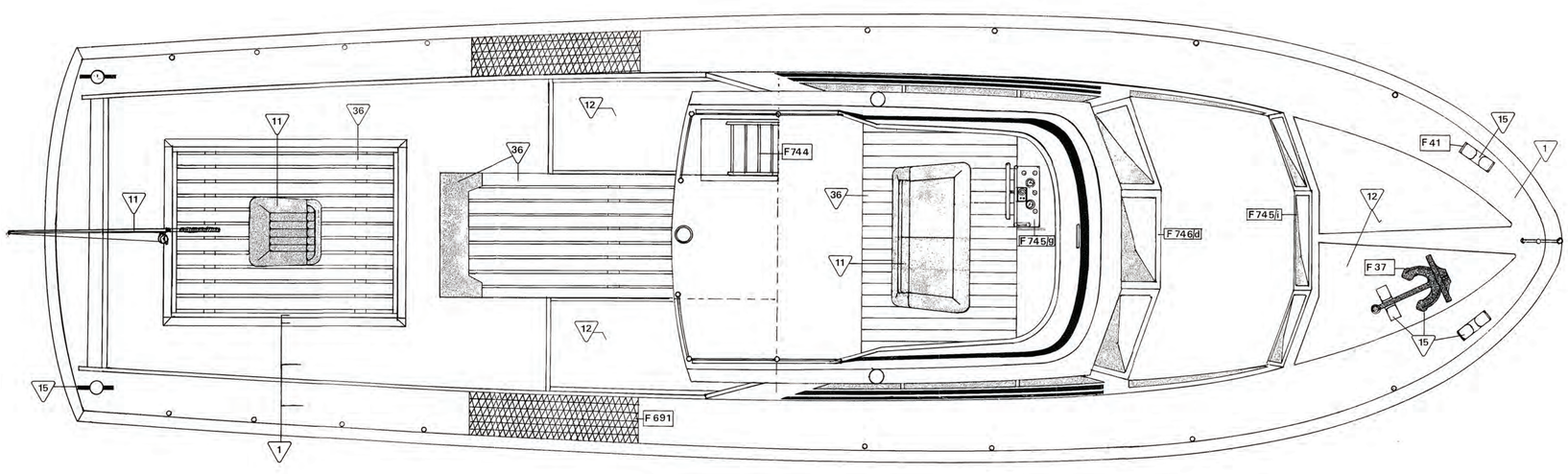

Drawn by:		Billing Boats Denmark Aps	
Date:	08.10.15.		
Scale: **No Scale**	**White Star "570"** *General Drawing*		Drawning no. 50-50030

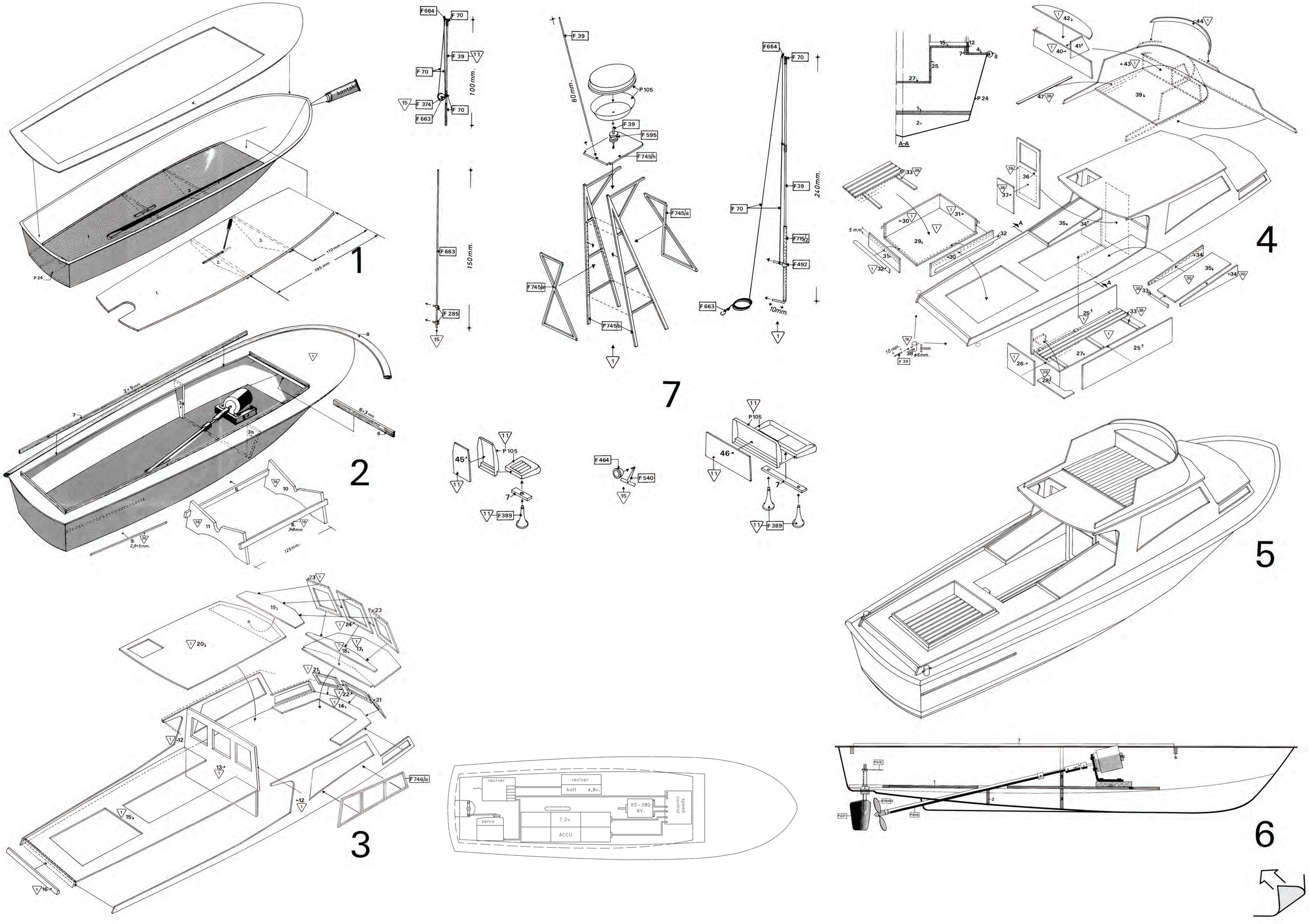
1
2
3
4
5
6
7
kontakt
P 24
110mm
195 mm
2×5mm
8×3mm
125mm
2,8×5mm
3×8mm
F664
F 70
F 39
F 374
F 663
100mm.
150mm.
F 285
80mm.
P105
F 595
F745/h
F745/a
F745/b
F715/2
F492
240mm.
10mm.
F 464
F 540
F389
F746/a
A-A
5 mm
10 mm.
9mm
6mm.
reciver
batt 4,8v.
RS-380
6V.
speed control
servo
7,2v.
ACCU