FINAL ASSEMBLIES

STOCK

Numbers are in order of assembly

(C) INDICATES CHROME PARTS

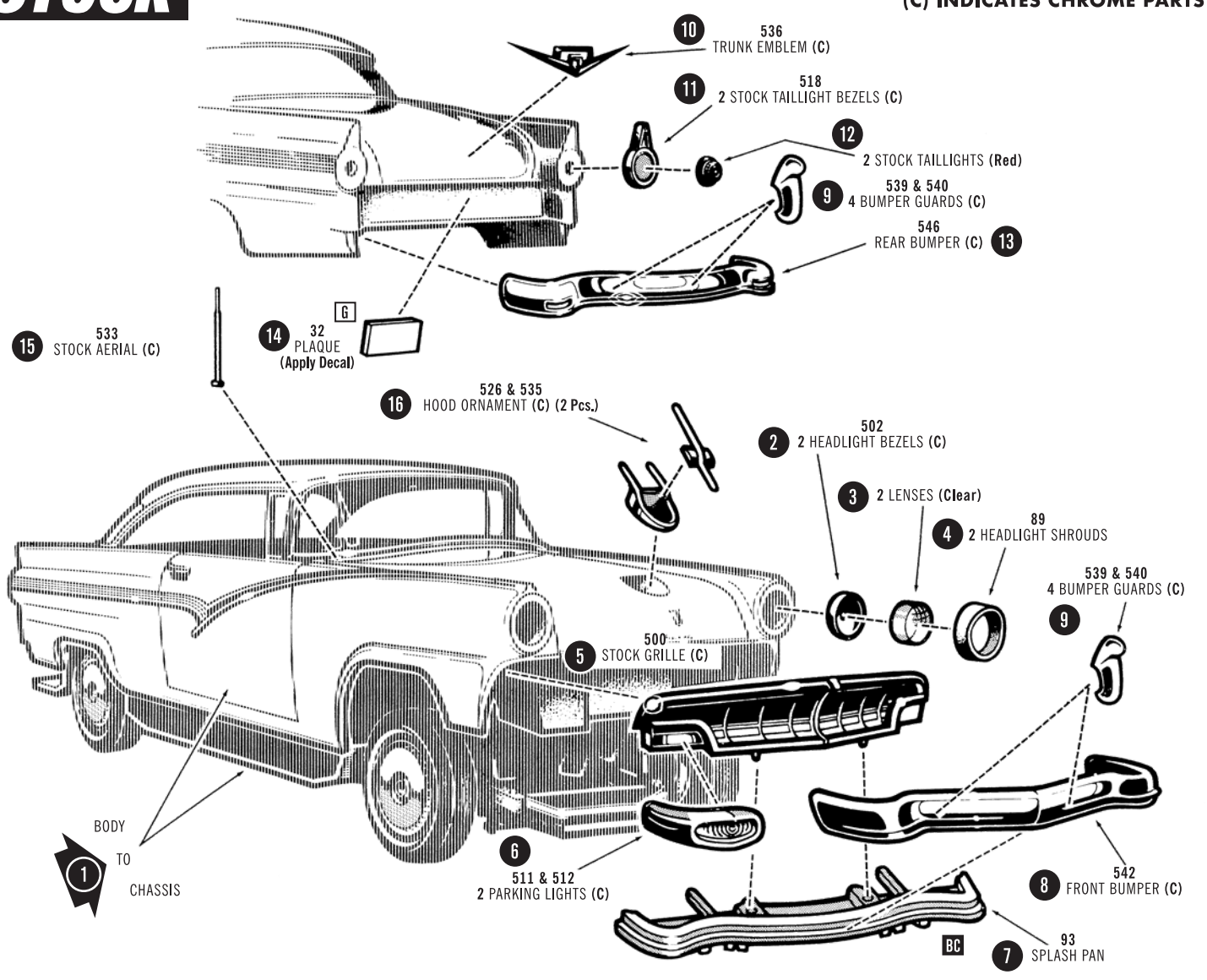

CUSTOM

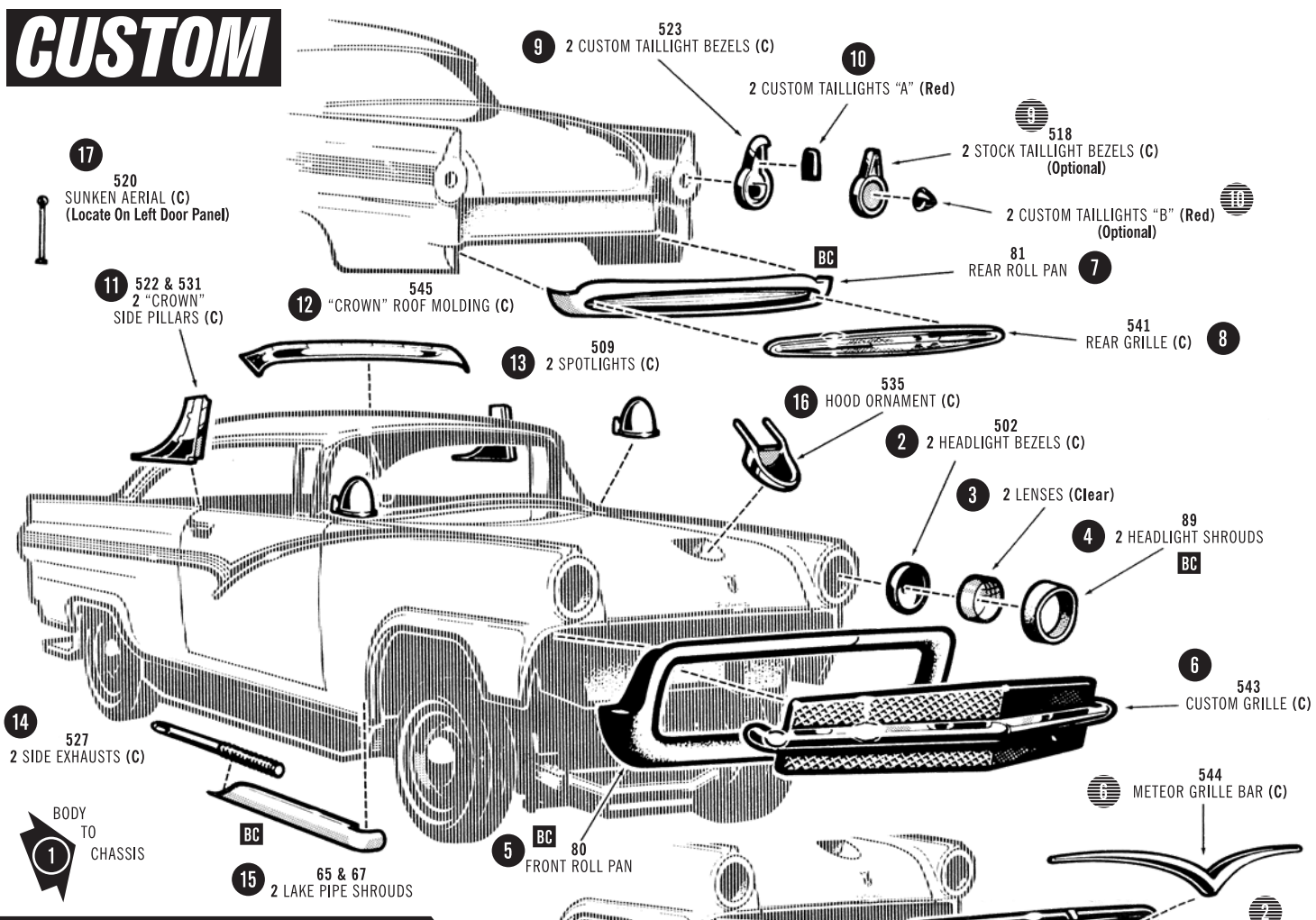

OPTIONAL FRONT END

PAINT COLORS

A	Black	O	Yellow
B	Flat Black	R	Tan
C	Semi-Gloss Black	S	Brown
D	White	T	Lt. Blue
E	Flat White	U	Med. Blue
F	Silver	V	Dark Blue
G	Chrome (Bright Silver)	W	Transparent Blue
H	Aluminum	X	Lt. Green
I	Steel	Y	Dark Green
J	Brass	Z	Gray
K	Gold	AA	Ford Engine Blue
L	Amber	IC	Interior Color
M	Transparent Amber	BC	Body Color
N	Red	▲	Semi-Gloss
O	Transparent Red	△	Gloss
P	Orange	◭	Metallic

It is recommended that you search the Internet for additional color references and details.

EXTERIOR COLORS

Standard Colors Include: Nocturne Blue, Colonial White, Pine Ridge Green, Platinum Gray, Peacock Blue, Bermuda Blue, Sunset Coral, Berkshire Green, Meadow Mist Green, Buckskin Tan, Diamond Blue, Fiesta Red, Golden Glow Yellow, Mandarin Orange, Spring Mist Green and Raven Black.

INTERIOR COLORS

Standard Colors Include: Raven Black, Diamond Blue, Colonial White, Meadow Mist Green, Platinum Gray, Buckskin Tan, Fiesta Red, Peacock Blue and Mandarin Orange.

DRAG

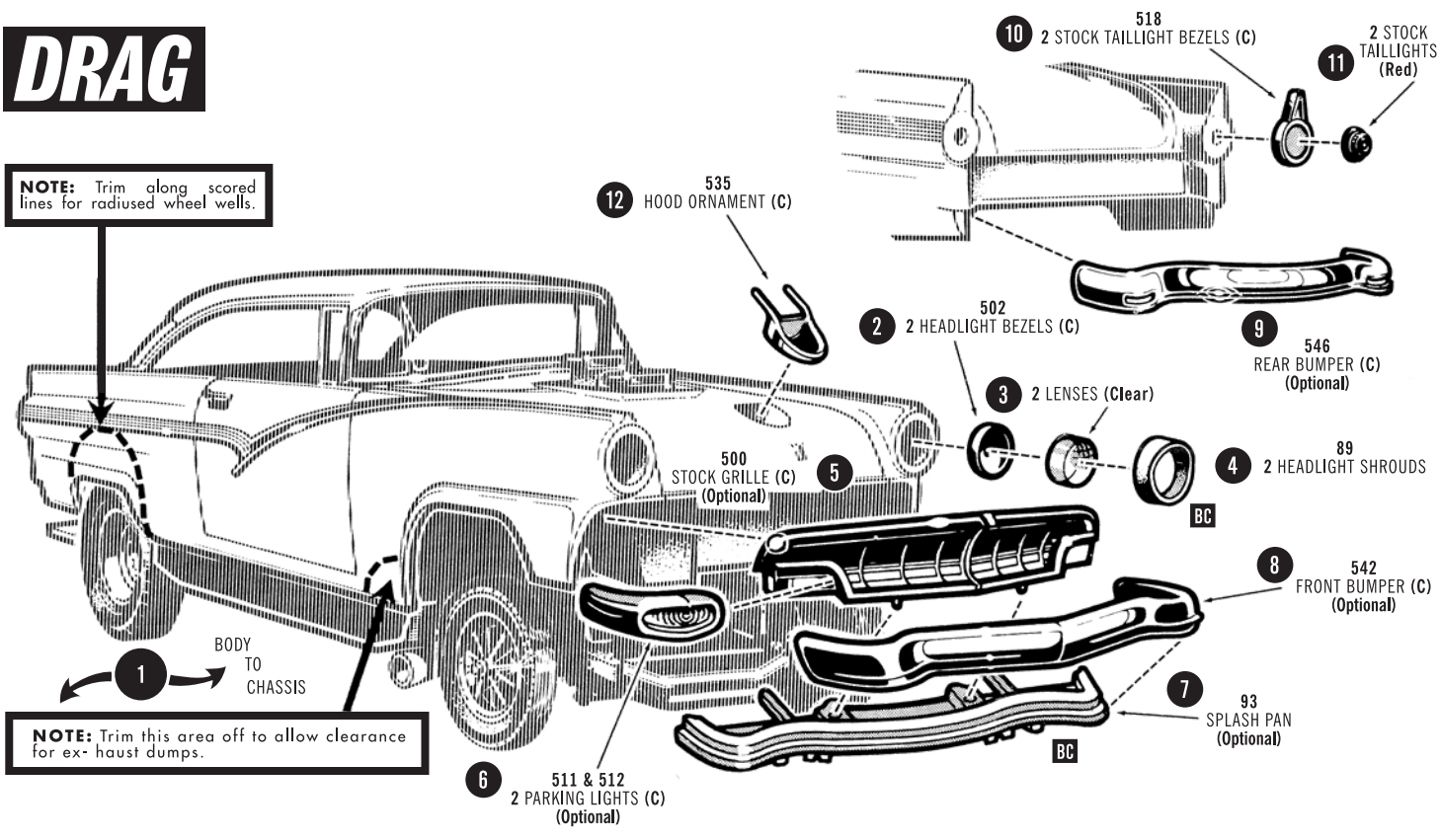

Ford Official Licensed Product
Firestone OFFICIALLY LICENSED PRODUCT
Ford Motor Company Trademarks and Trade Dress used under license to Round 2, LLC. All rights reserved. Distributed by Round 2 LLC. Firestone and F Shield Logo are registered trademarks of Bridgestone Brands, LLC and are used with permission. AMT and design is a registered trademark of Round 2, LLC. ©2022 Round 2, LLC, South Bend, IN 46628 USA. Product and packaging designed in the USA. Made in China. All rights reserved.

★★★

amt®

FORD 1956 VICTORIA

★★★

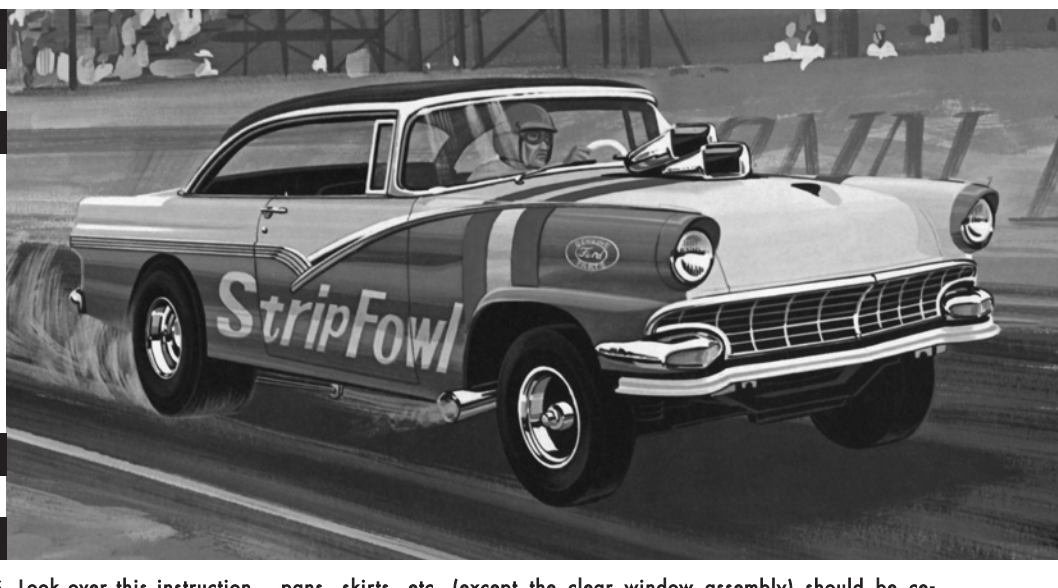

This kit may be built ONE OF THREE WAYS. Look over this instruction sheet carefully before you begin building. You may decide to combine parts from the different versions shown, or use parts from other AMT® kits for a really personalized model. After you've planned your car, follow the assembly instructions WITHOUT CEMENTING the parts together. This will familiarize you with the fit and location of parts.

For the neatest job, the various sub-assemblies and components should be painted before any chrome parts are attached. For example: in building the custom version, all non-chrome parts such as scoops, pans, skirts, etc. (except the clear window assembly) should be cemented in place and the body should then be painted as a unit for a smooth, professional-looking finish.

AMT® kits are molded from the finest high-impact styrene plastic. Use only paint and cement made for styrene plastic. Trim off any excess plastic before cementing parts together. When attaching CHROME parts (indicated by "C" after part names), scrape plating away where cement is to be applied. Use just enough cement to join plastic parts, and be especially careful not to smear cement on exposed surfaces.

BASIC ASSEMBLIES

(C) INDICATES CHROME PARTS

Numbers are in order of assembly

1. engine

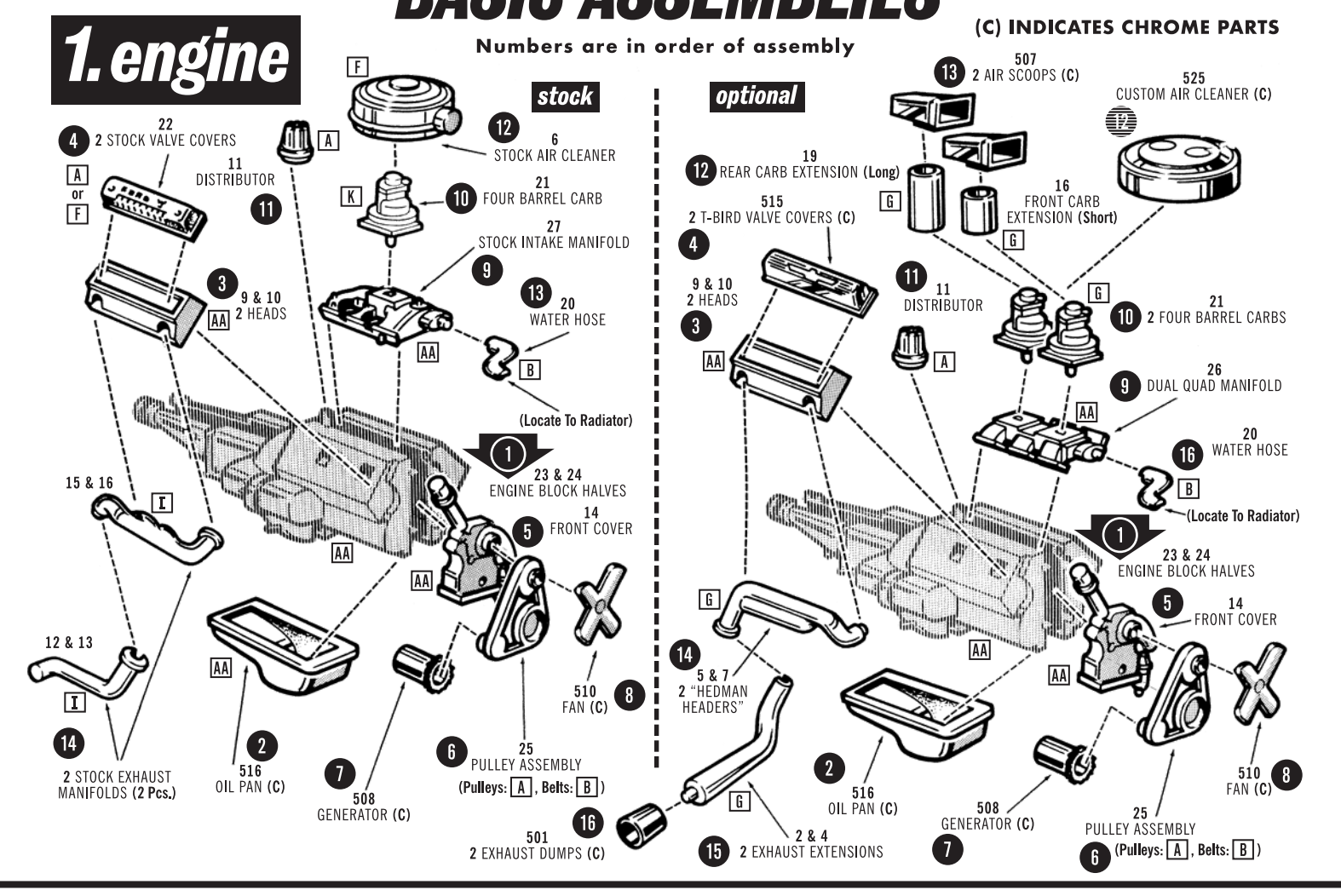

2. wheels - chassis

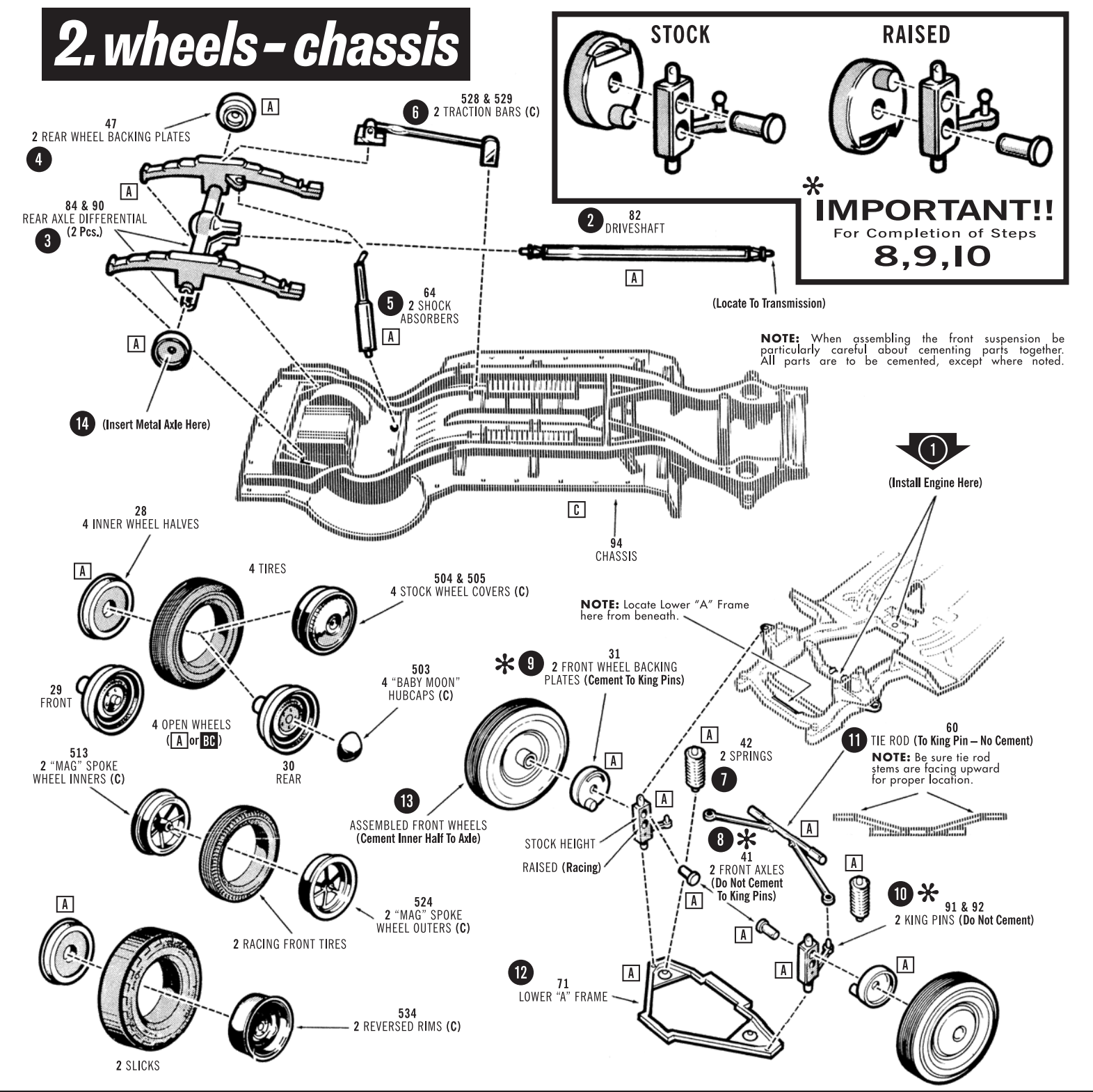

3. interior

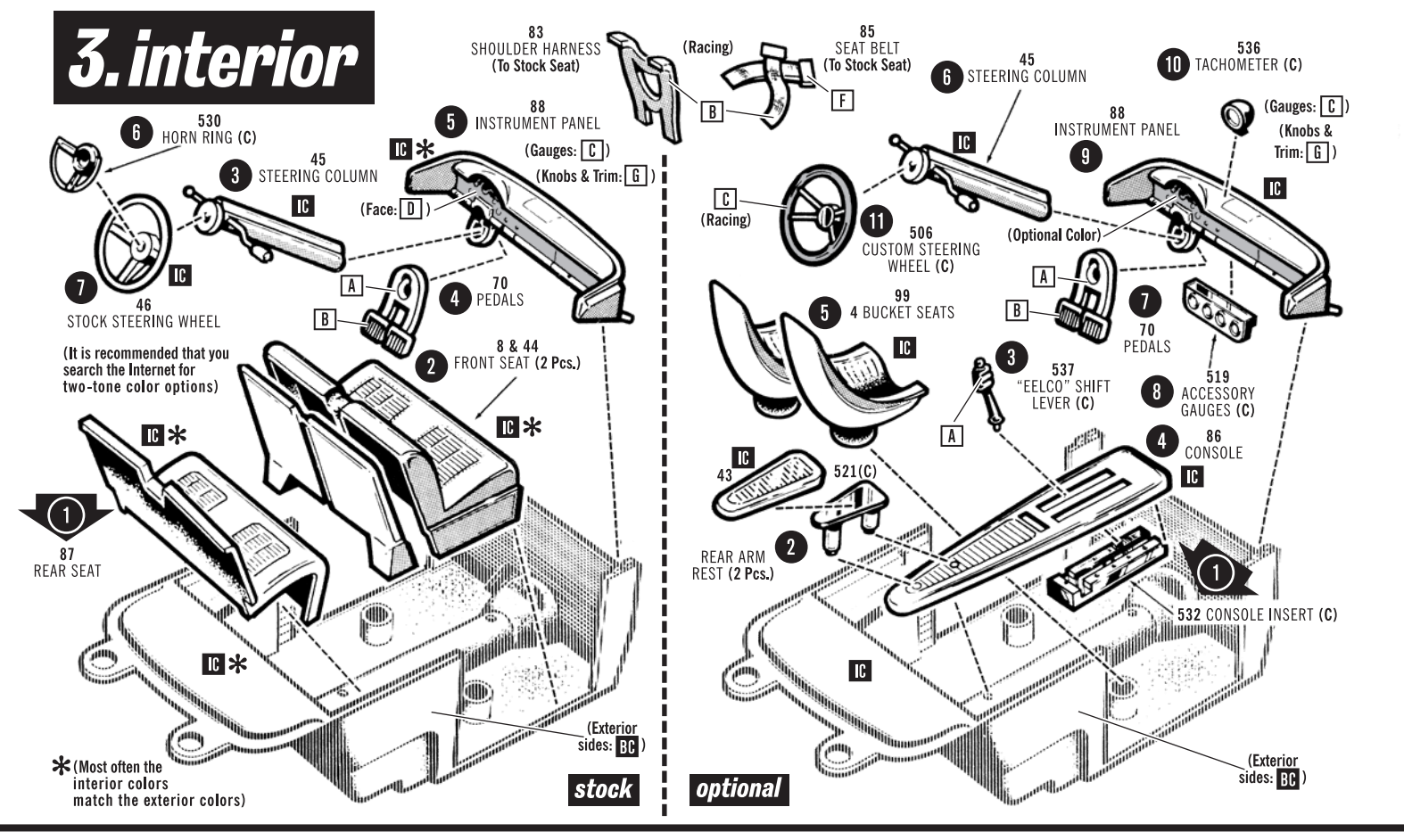

4. body

(Body may be painted using a single color or two-tone color combination. See box art for reference or search the Internet for more options.)
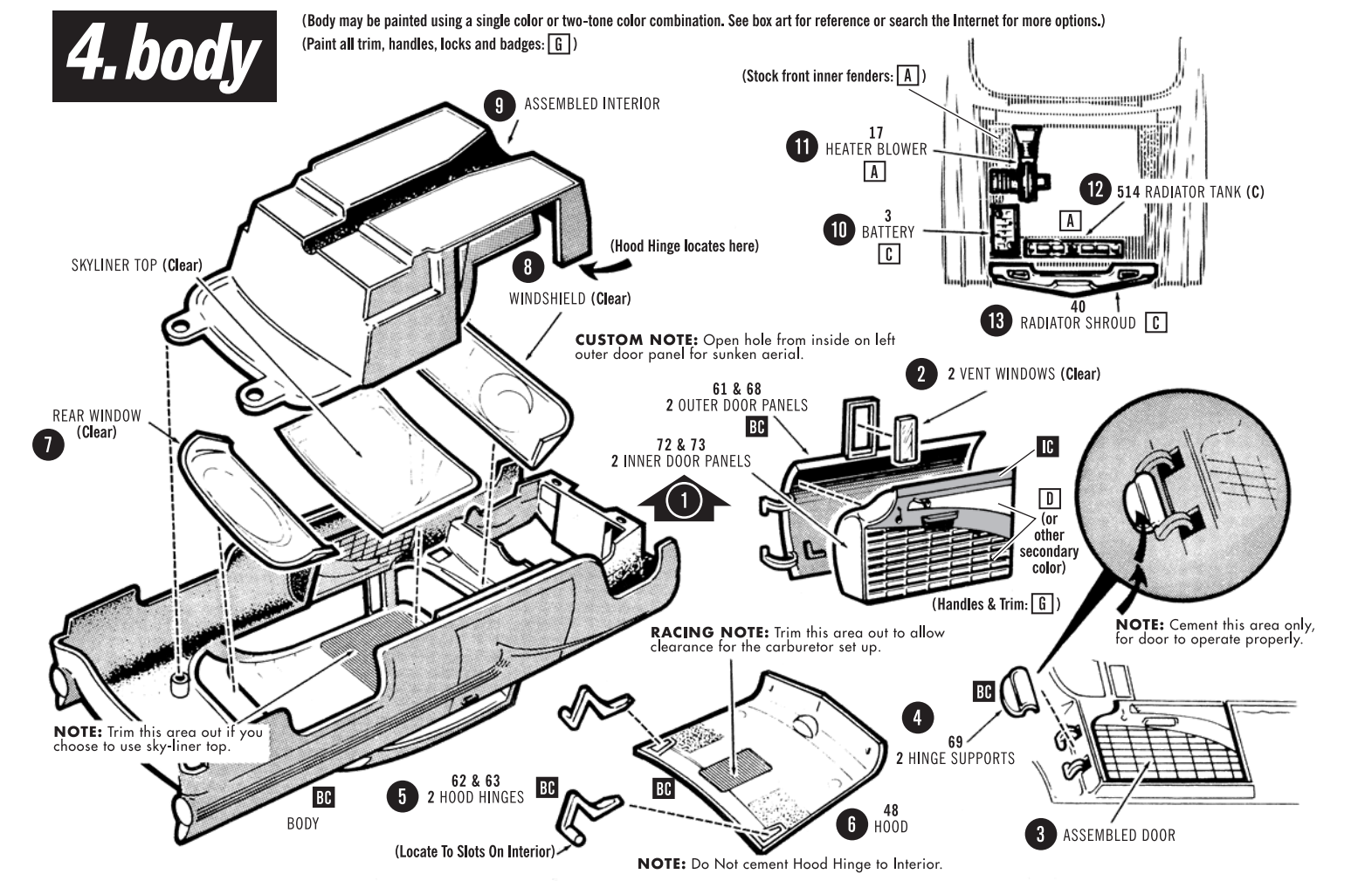
(Paint all trim, handles, locks and badges: G)