SPARK XB6

# REAR GEARBOX CASE

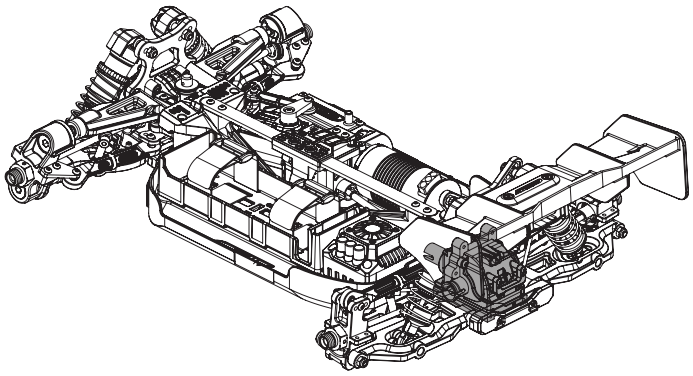

**Required Tools:**

- 1.5 Hex Driver
- 2.0 Hex Driver
- 2.5 Hex Driver
- Thread-locker
- Lithium Grease

## STEP 1

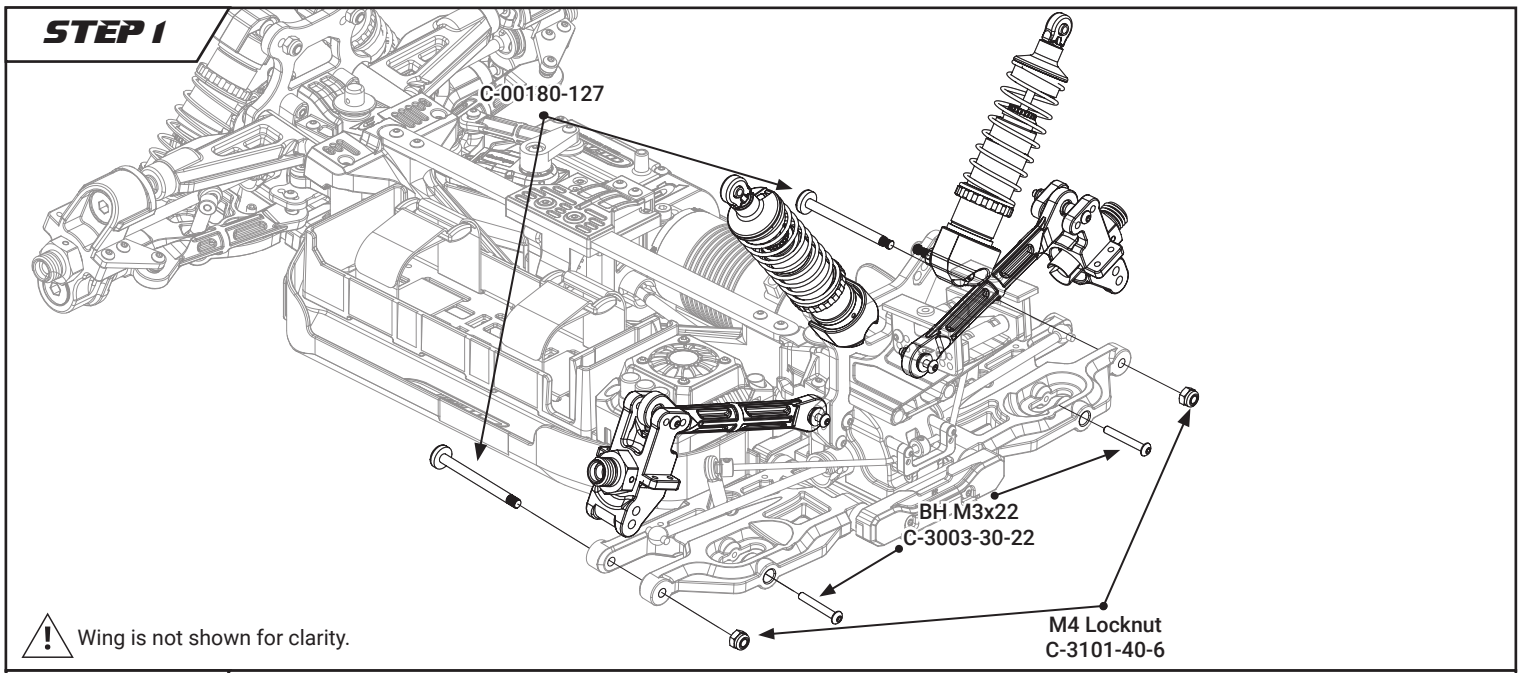


⚠ Wing is not shown for clarity.

## STEP 2

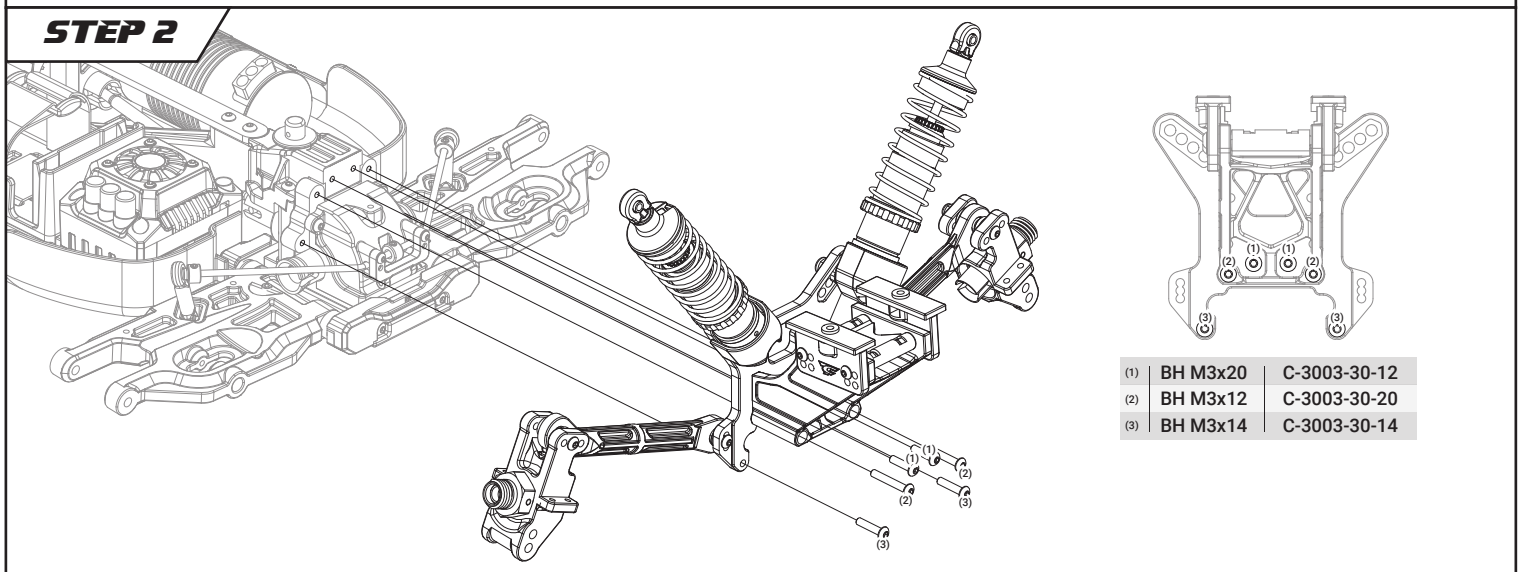


| | | |
|---|---|---|
| (1) | BH M3x20 | C-3003-30-12 |
| (2) | BH M3x12 | C-3003-30-20 |
| (3) | BH M3x14 | C-3003-30-14 |

⚠ Wing is not shown for clarity.

# REAR GEARBOX CASE



## STEP 3

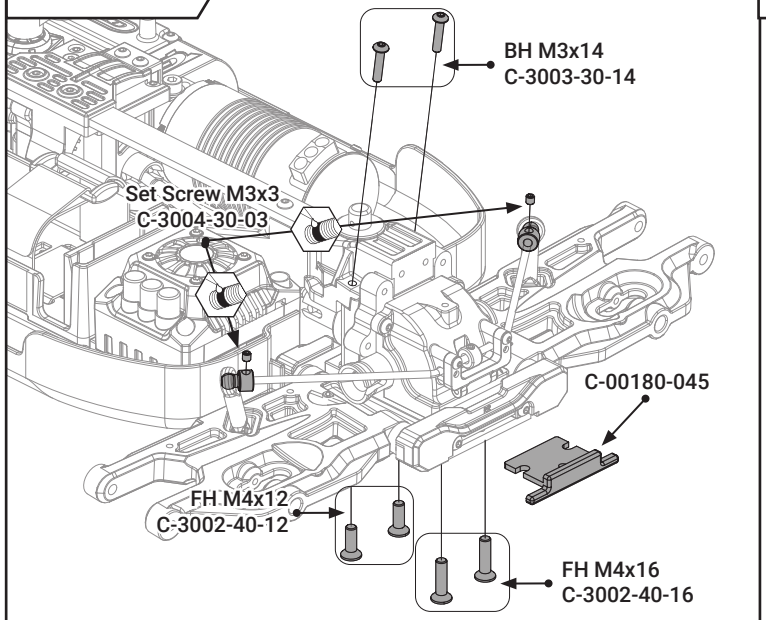


## STEP 4

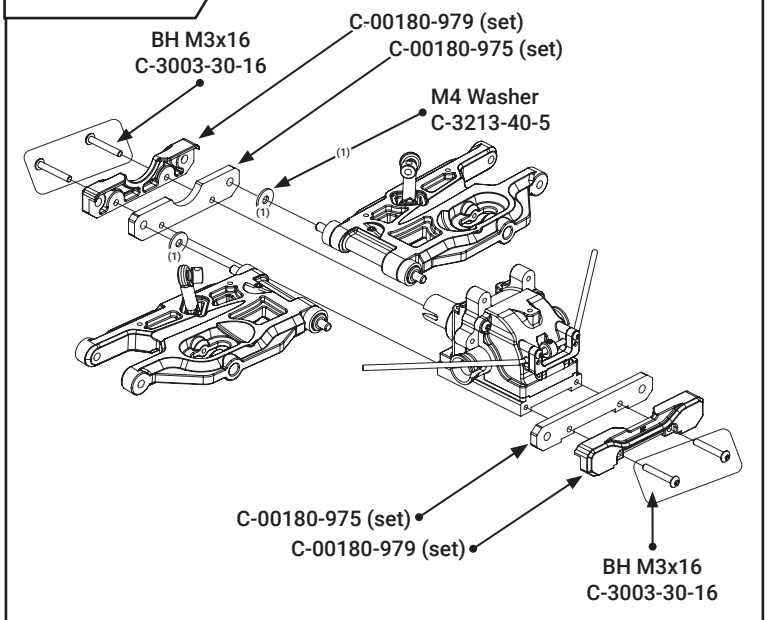


## STEP 5

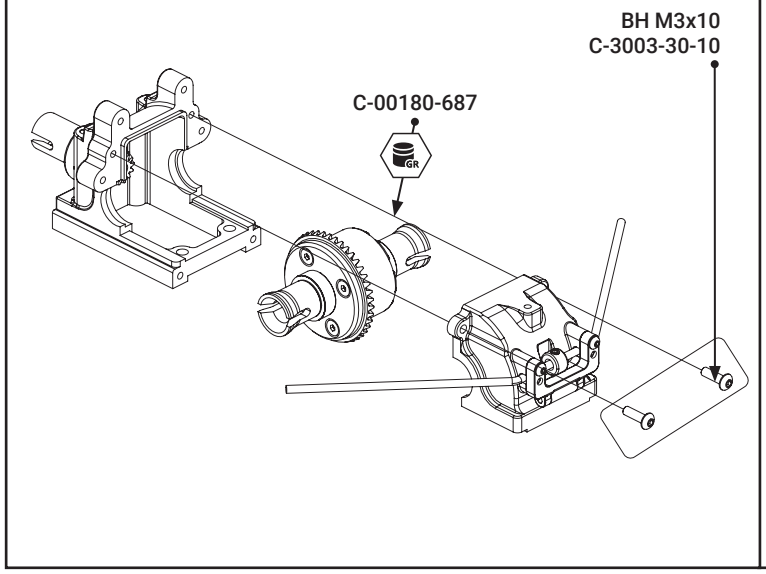


## STEP 6

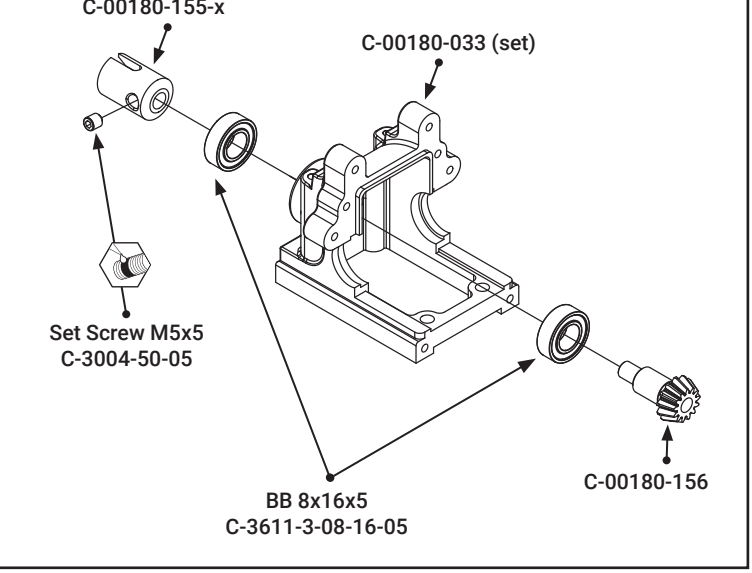


WWW.CORALLY.COM
TEAM CORALLY MODELSPORT
ONE-PAGE MANUAL