SPARK XB6

FRONT AND REAR DIFF

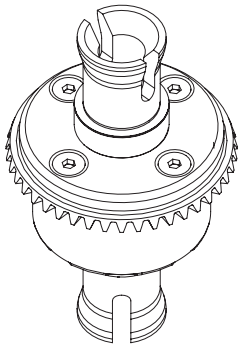

	FRONT DIFF	CENTRE DIFF	REAR DIFF
TRACK USE	7500cps	15.000cps	5.000cps
OFF ROAD	10.000cps	30.000cps	7.500cps
FACTORY	20.000cps	50.000cps	10.000cps

Required Tools:

- 2.0 Hex Driver
- Silicone Diff Oil
- Paper Towel
- Solvent/Brake Cleaner
- Hobby Knife or Other Sharp Tool
- Pliers

Finish Before:

- Front Diff Removal or Rear Diff Removal

Important Notice:

Do NOT use solvents on rubber gaskets or O-rings to prevent damage.

VIDEO MANUAL
KAGAMA AND ASUGA
ON YOUTUBE

STEP 1

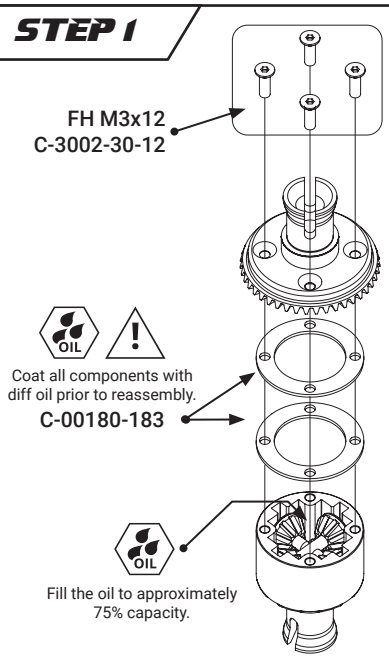

STEP 2

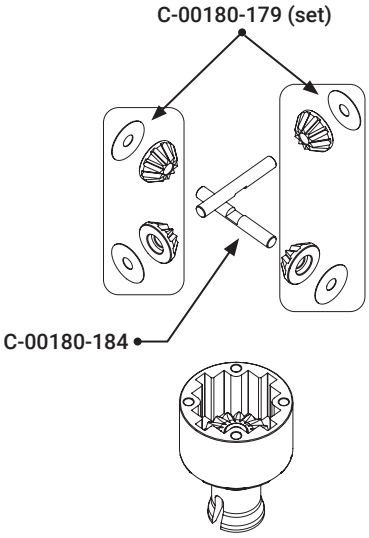

STEP 3

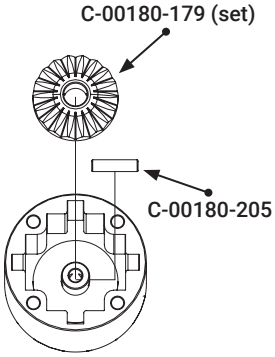

STEP 4

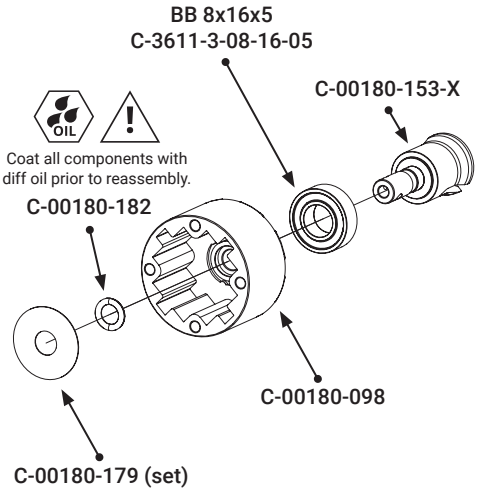

STEP 5

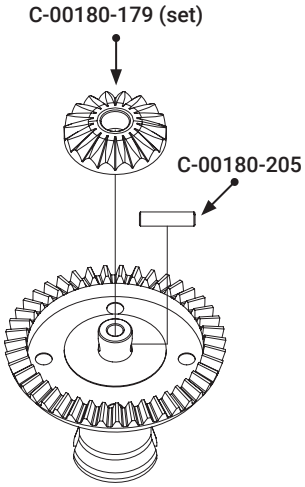
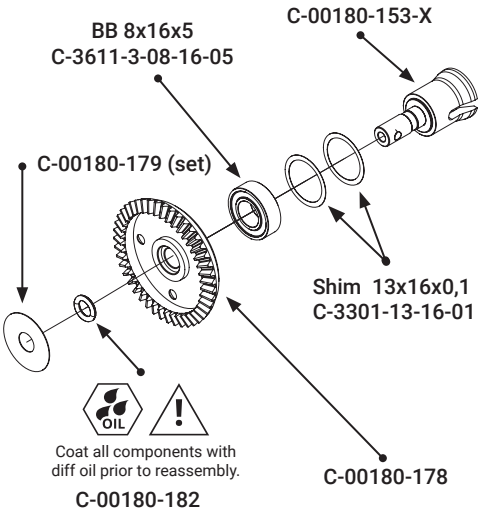
STEP 6