Billing Boats

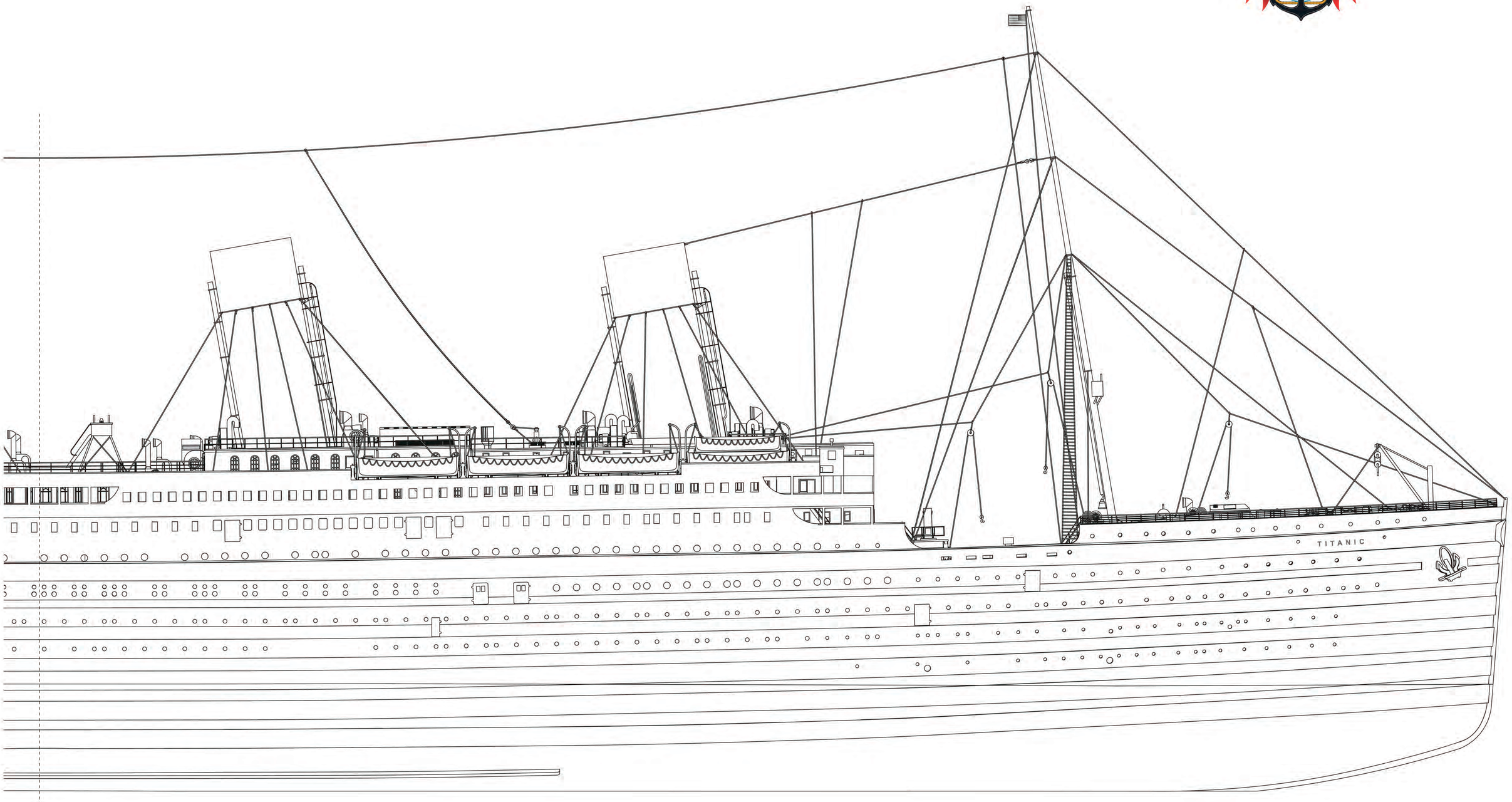

		Billing Boats - Denmark
Scale: 1:144	**RMS Titanic „510„** *General Drawing 1*	Drawning no. 50-50104

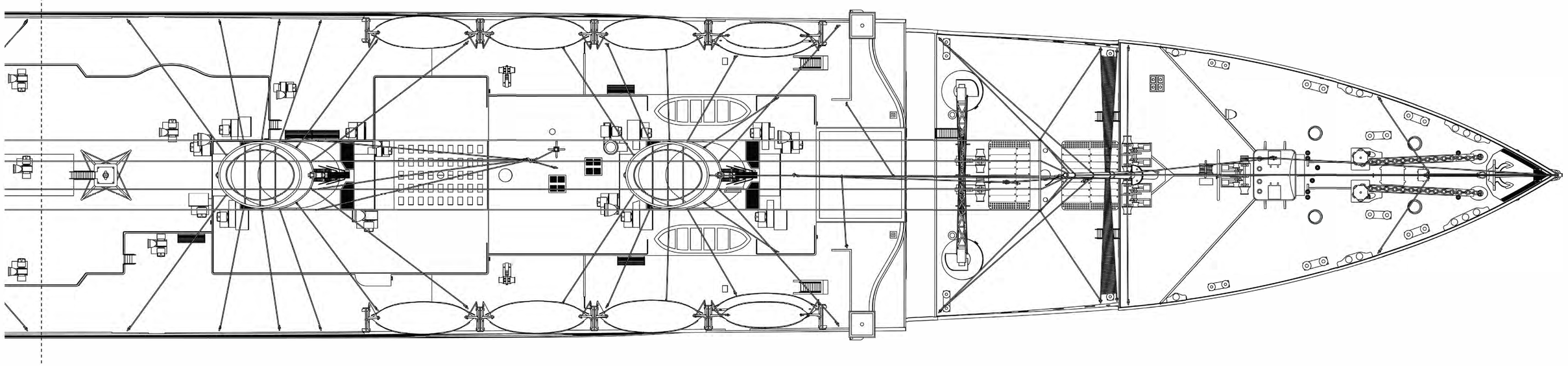

		Billing Boats - Denmark
Scale: 1:144	**RMS Titanic „510„** *General Drawing 1*	Drawning no. 50-50104

Billing Boats

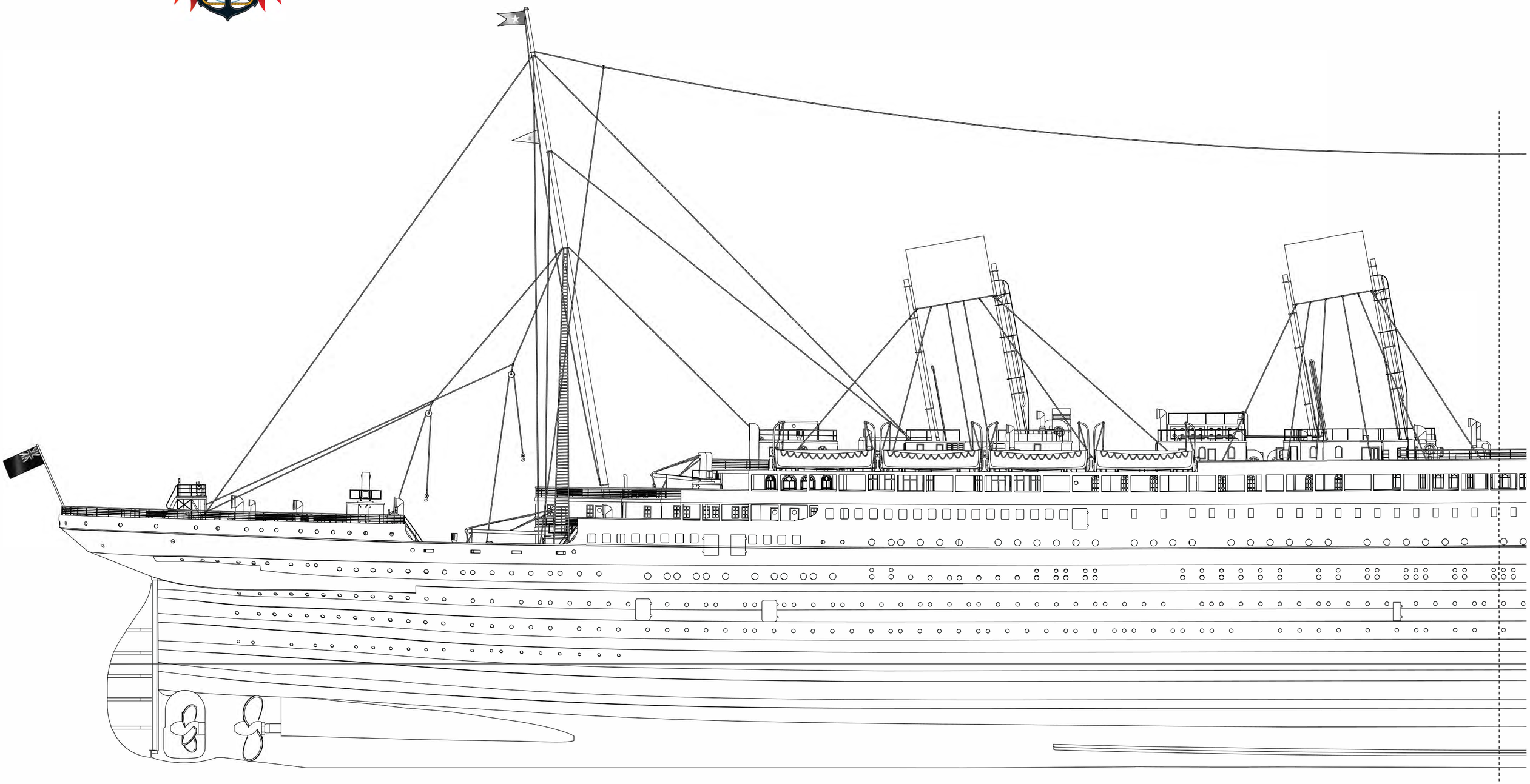

		Billing Boats - Denmark
Scale: 1:144	**RMS Titanic „510„** *General Drawing 2*	Drawning no. 50-50104-2

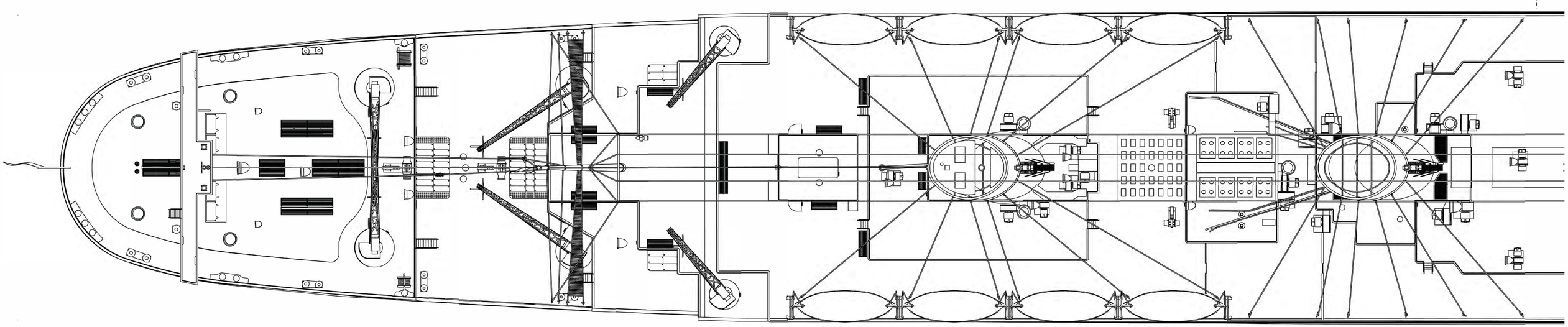

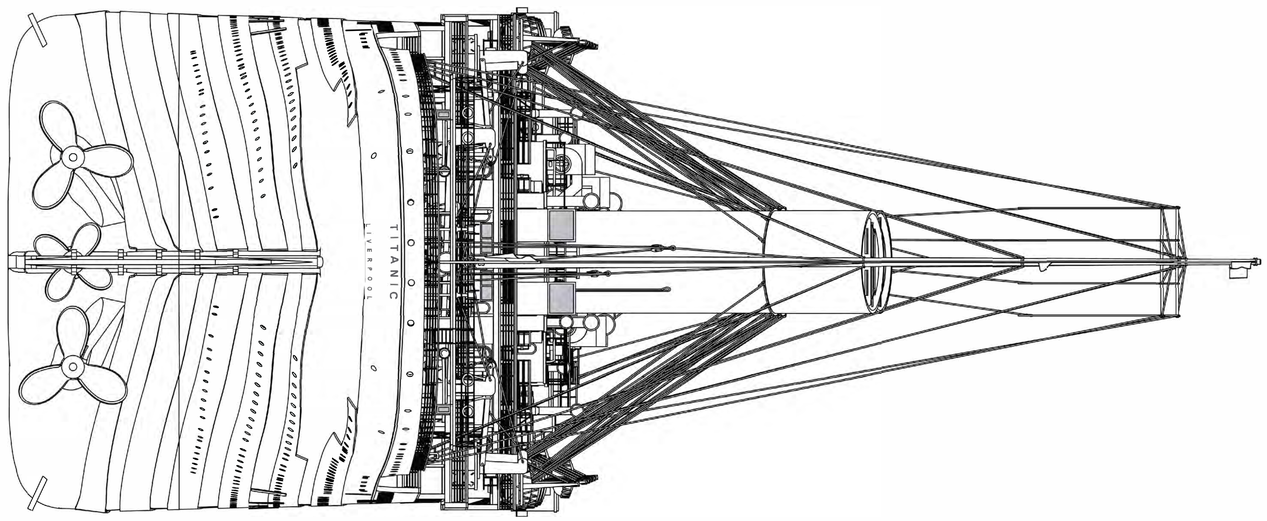

		Billing Boats - Denmark
Scale: 1:144	**RMS Titanic „510„** *General Drawing 2*	Drawning no. 50-50104-2