Billing Boats®

	8090-1	**Billing Boats Denmark Aps**
Scale: 1:33	**SMIT NEDERLAND ”528”** *Plan 1*	Drawing no. 50-50017

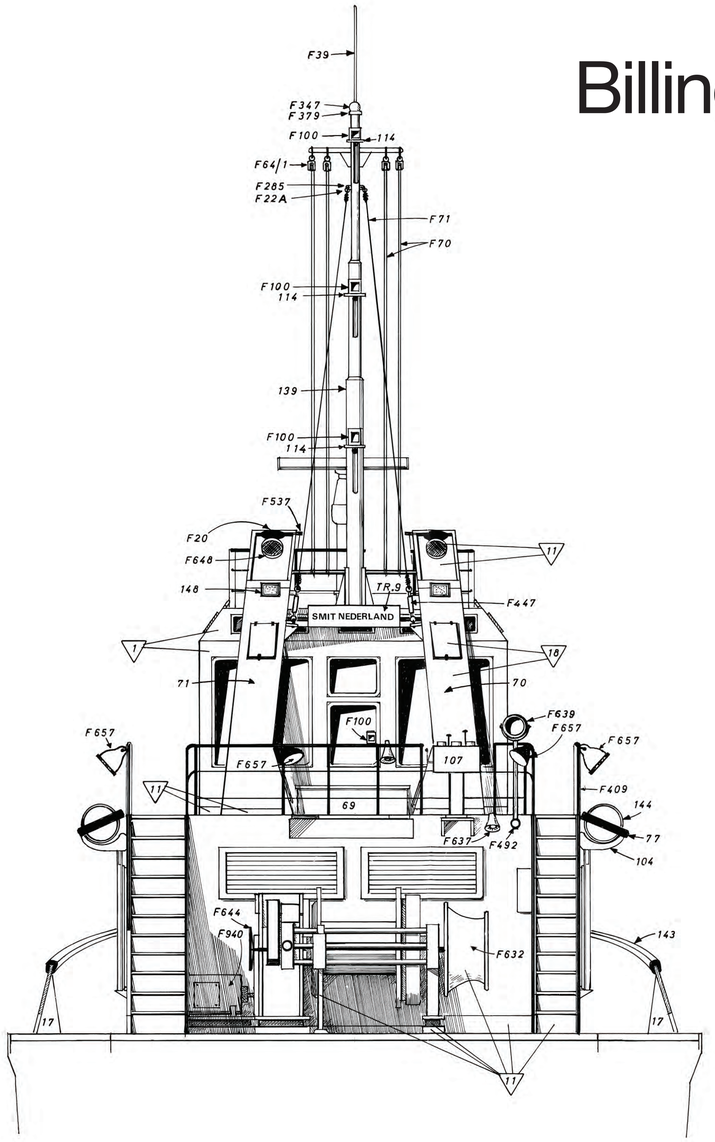

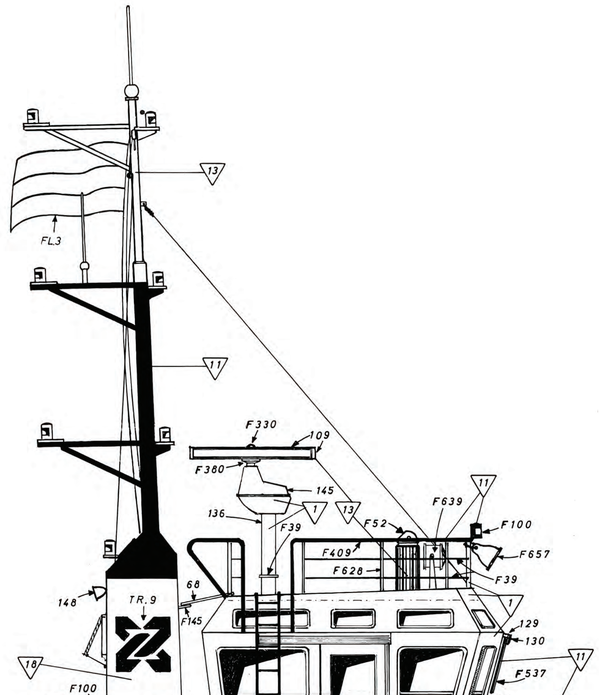

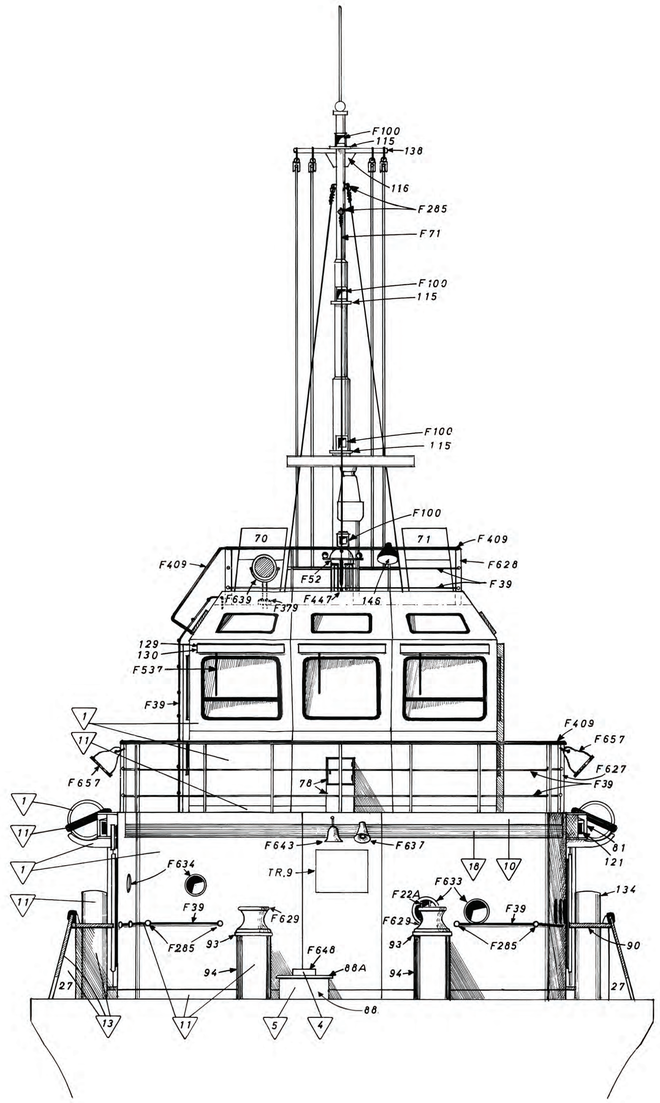

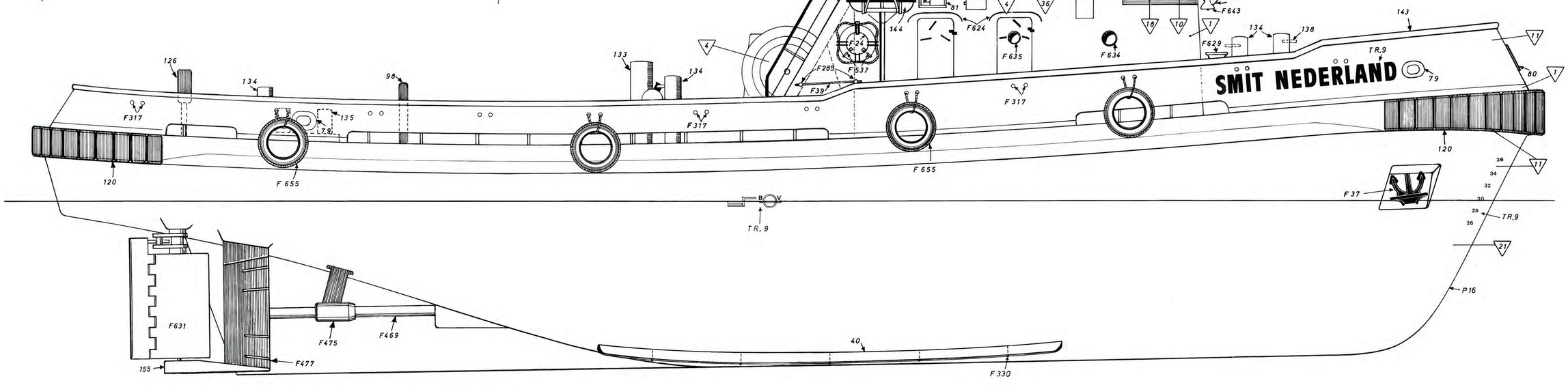

Billing Boats®

	8091-1	**Billing Boats Denmark Aps**
Scale: 1:33	**SMIT NEDERLAND "528"** *Plan 2*	Drawing no. 50-50017

