Billing Boats®

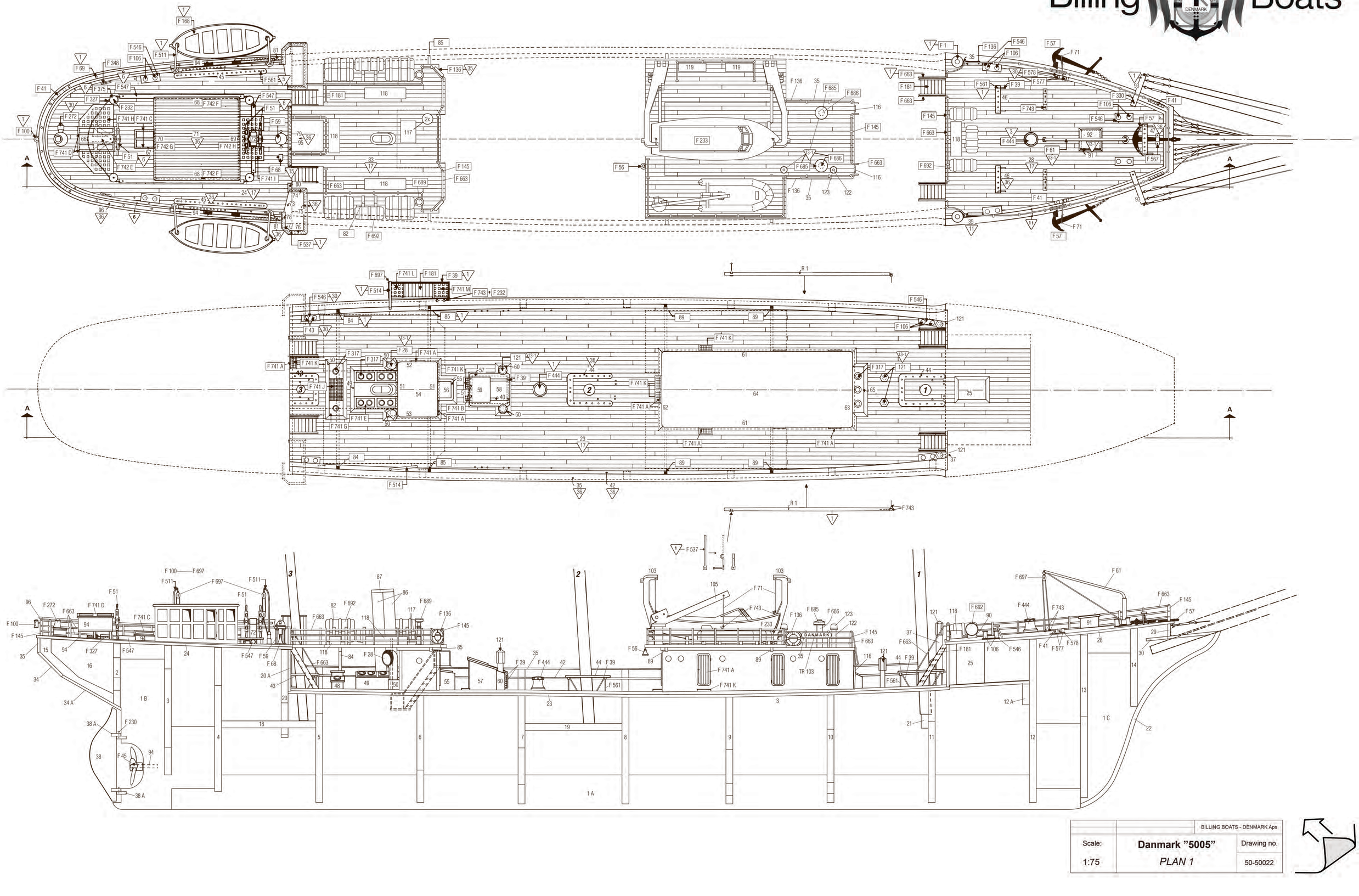

		BILLING BOATS - DENMARK Aps
Scale: 1:75	**Danmark ”5005”** *PLAN 1*	Drawing no. 50-50022

Billing Boats®

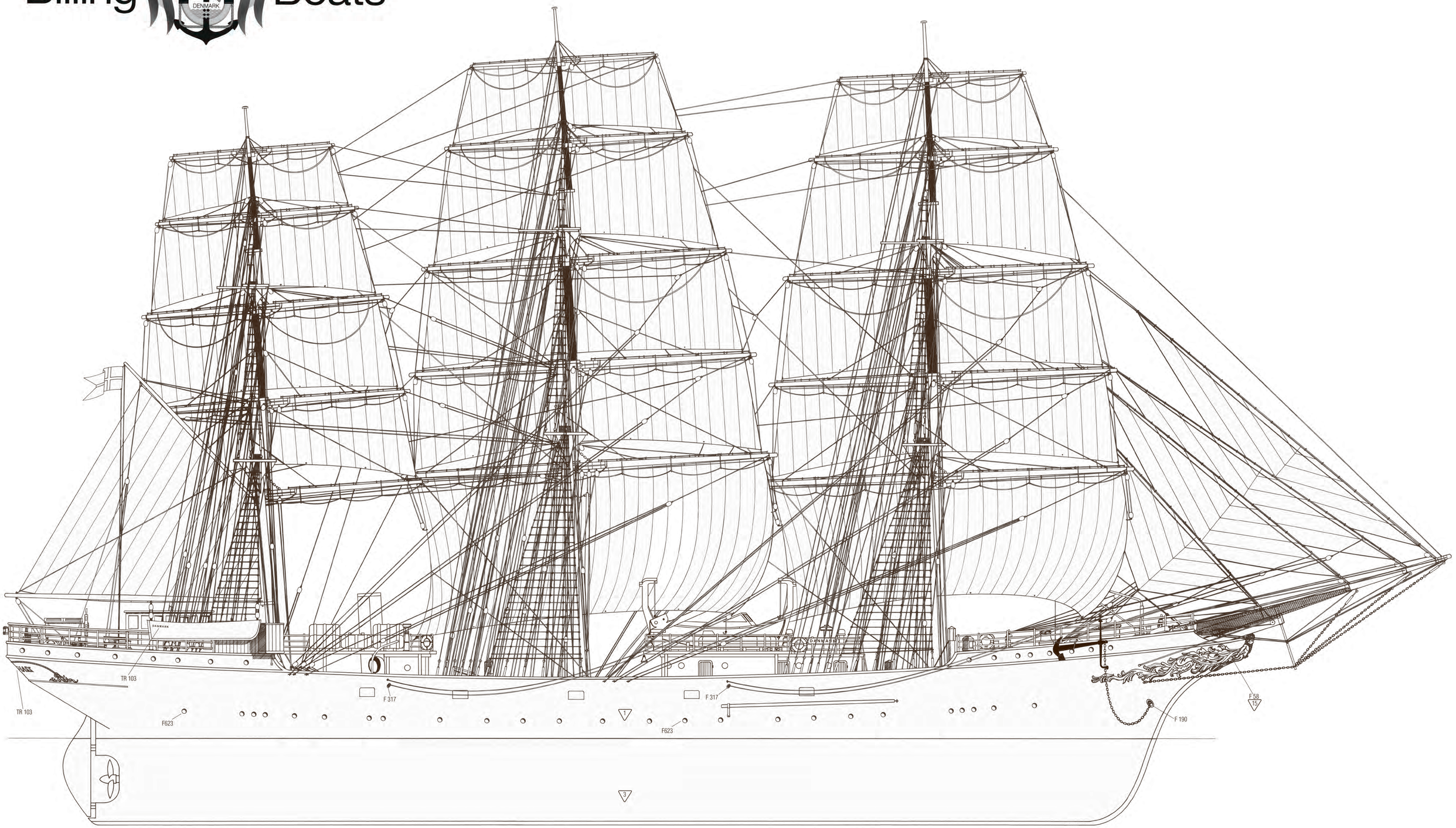

		BILLING BOATS - DENMARK Aps
NOT IN SCALE	**Danmark ”5005”** *PLAN 2*	Drawing no. 50-50022

Billing Boats®

		BILLING BOATS - DENMARK Aps
Scale: 1:75	**Danmark ”5005”** *PLAN 3*	Drawing no. 50-50023

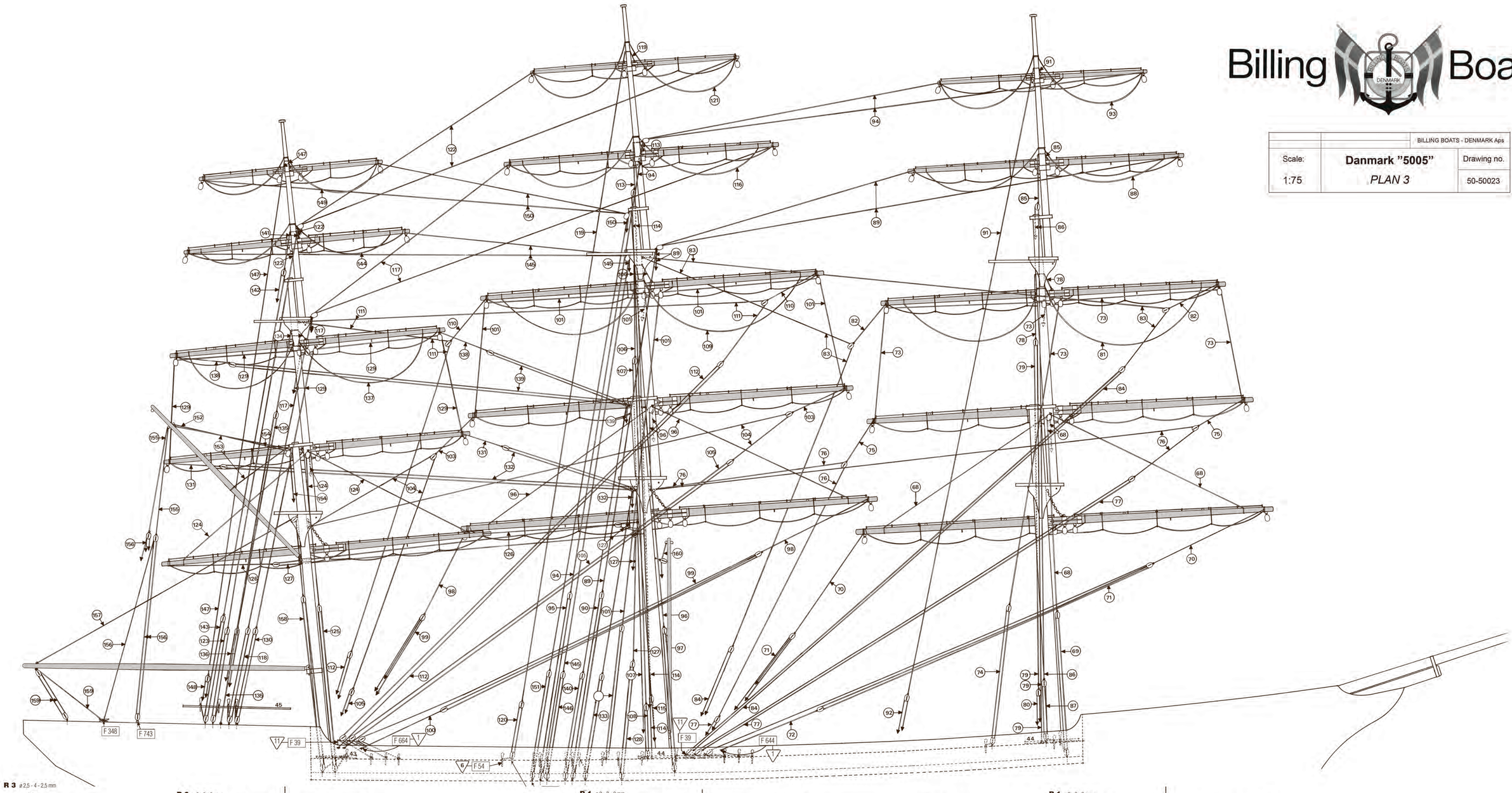

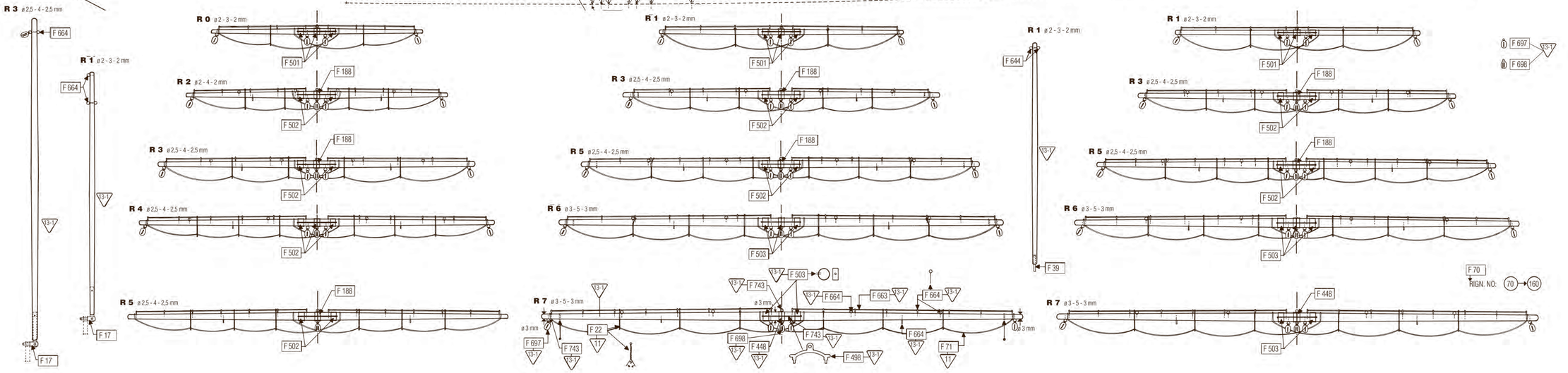

Billing Boats®

		BILLING BOATS - DENMARK Aps
Scale: 1:75	**Danmark ”5005”** *PLAN 4*	Drawing no. 50-50023

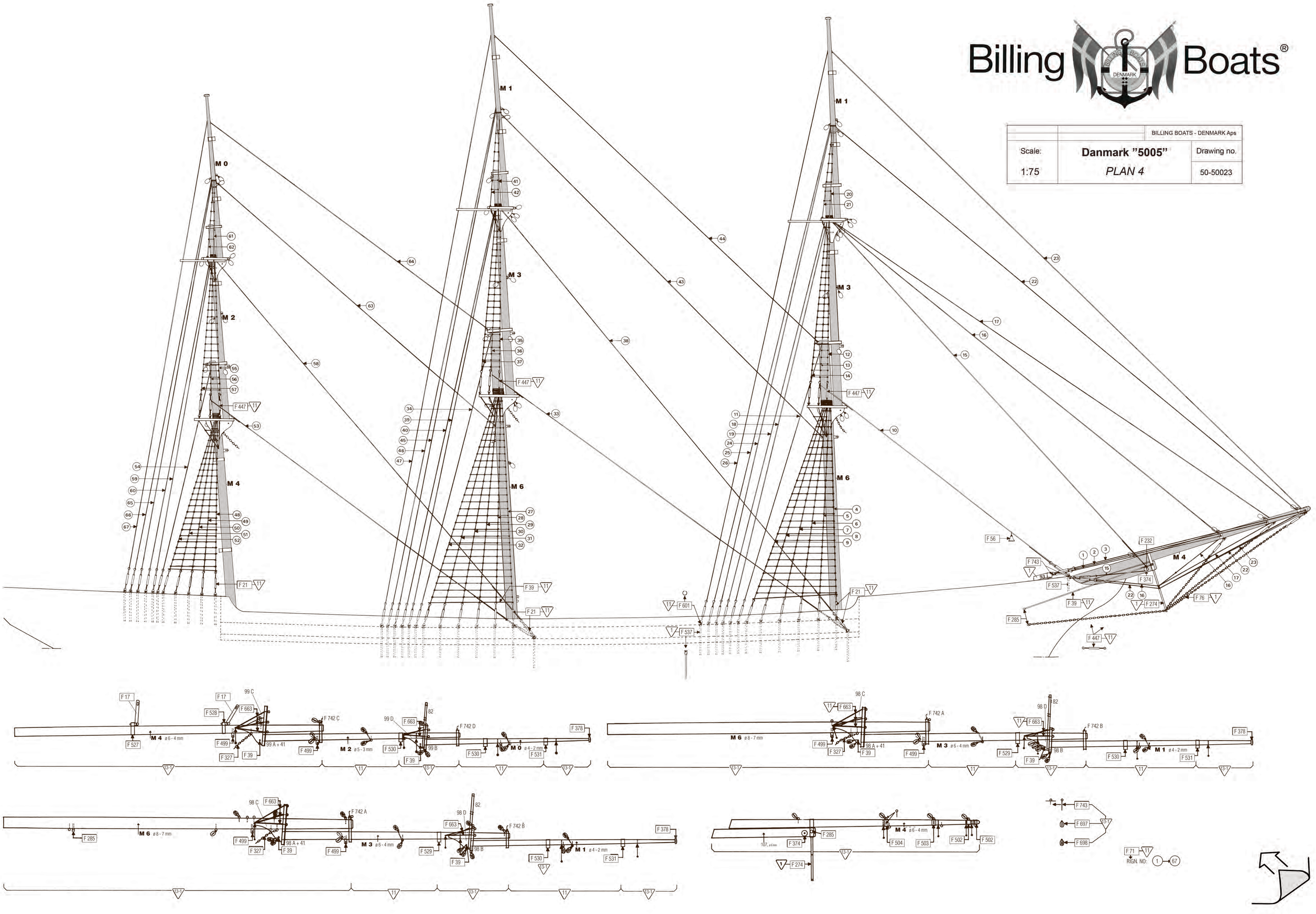

F 71 11
RIGN. NO: 1 → 67

Billing Boats®

	BILLING BOATS - DENMARK Aps	
NOT IN SCALE	**Danmark ”5005”** *PLAN 5*	Drawing no. 50-50024

F 743 F 317 F 54

F 54 F 743

F 348 F 39

F 70 RIGN. NO: 161 → 219 SAIL
RIGN. NO: 1 → 219 RIGN. DECK

F 537 F 21 F 54 F 743 F 697 F 22A

Billing Boats®

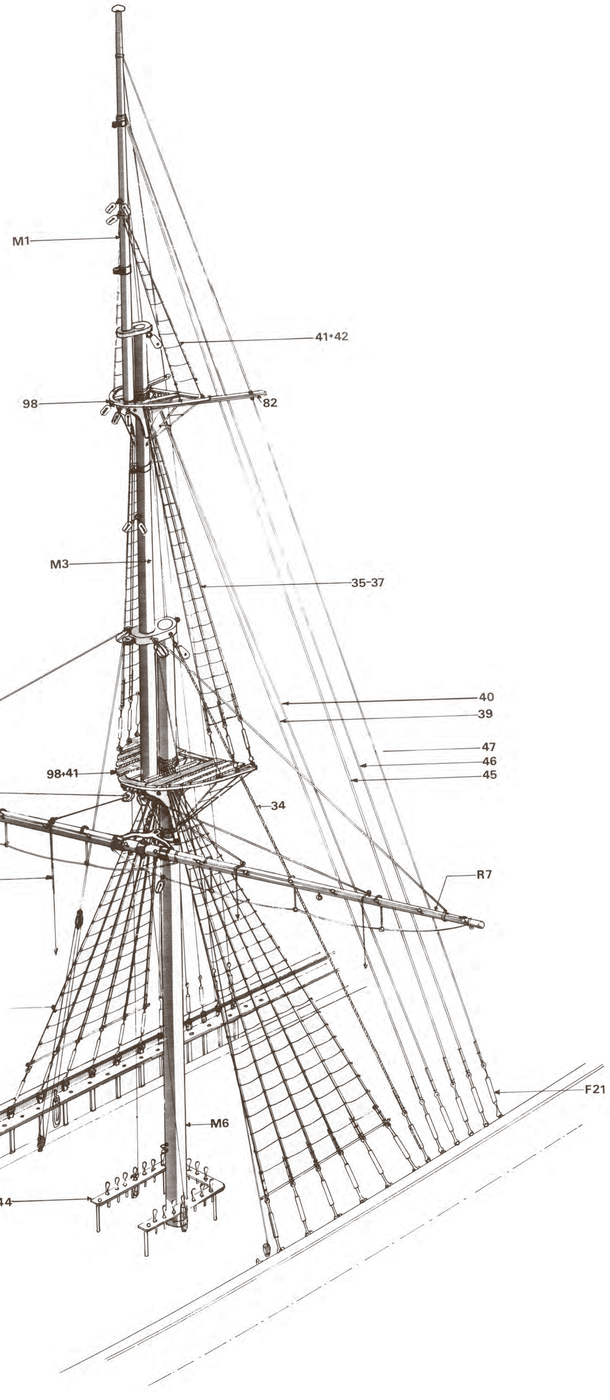

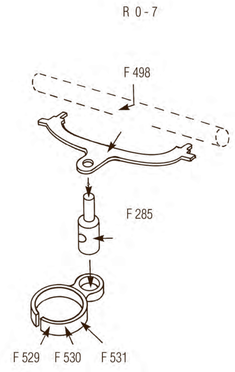

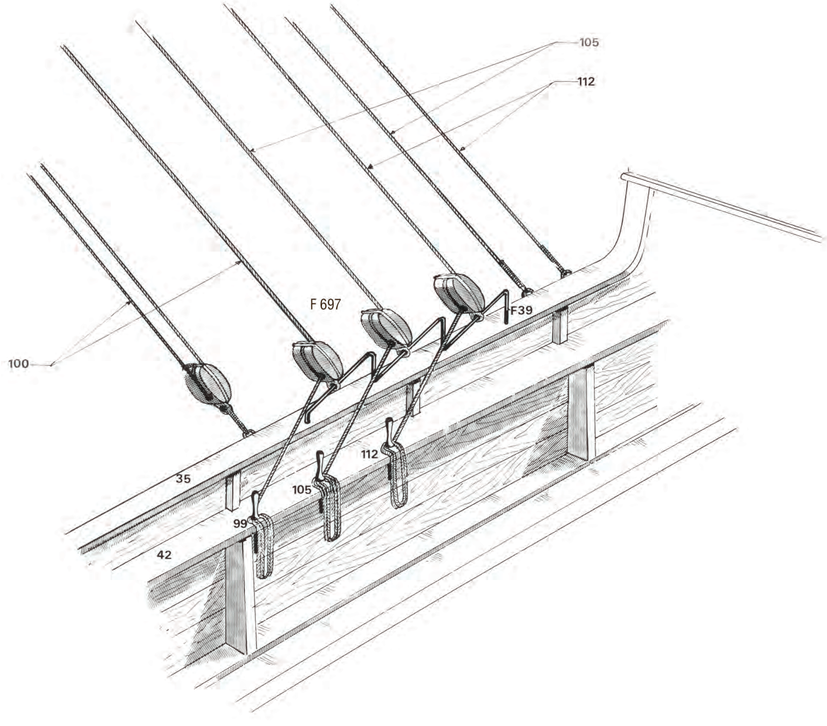

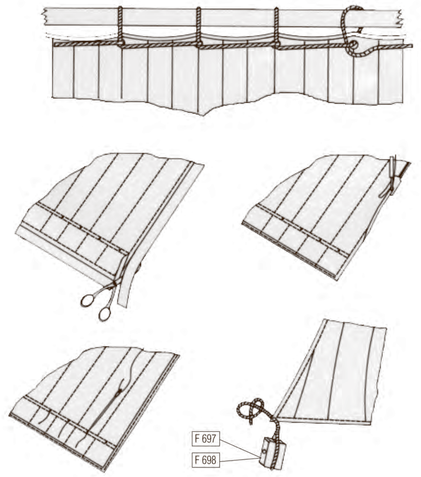

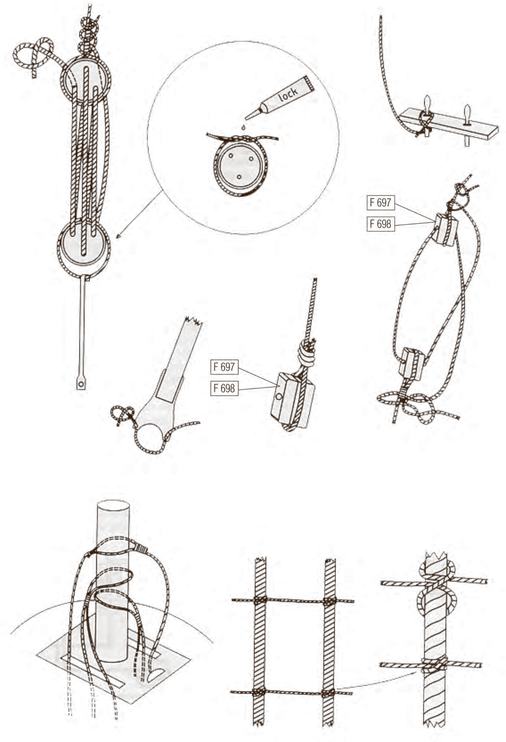

		BILLING BOATS - DENMARK Aps
NOT IN SCALE	**Danmark ”5005”** *PLAN 6*	Drawing no. 50-50024