SPARK XB6

REAR SUSPENSION ASSEMBLY

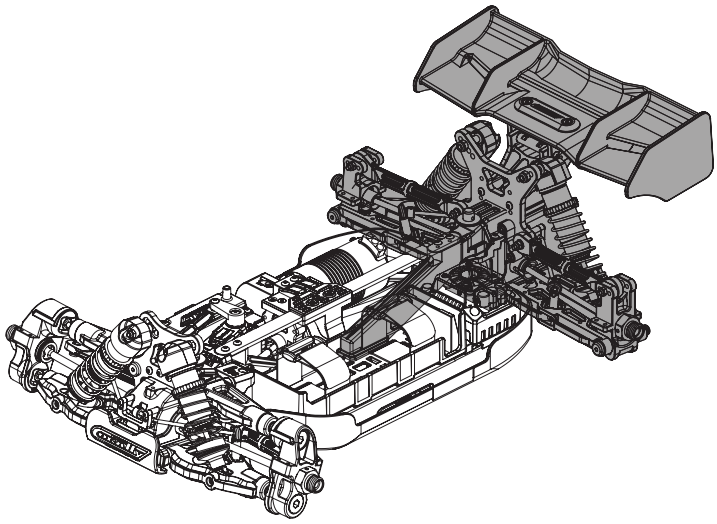

Required Tools:

- 2.0 Hex Driver
- 2.5 Hex Driver

STEP 1

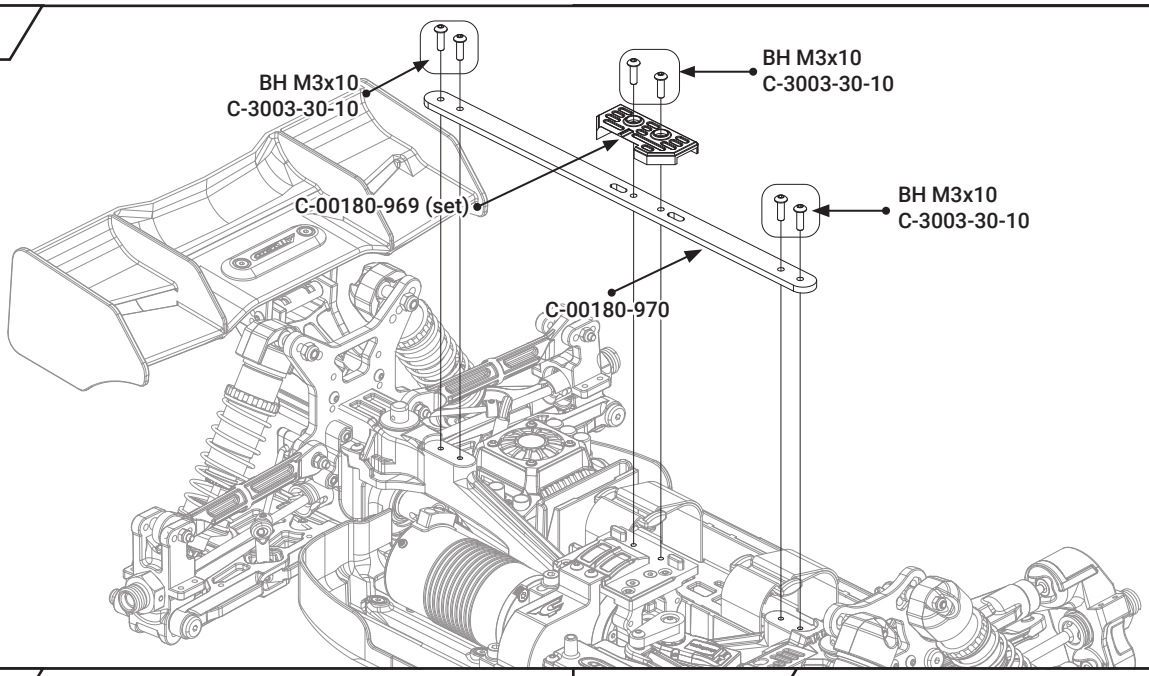

STEP 2

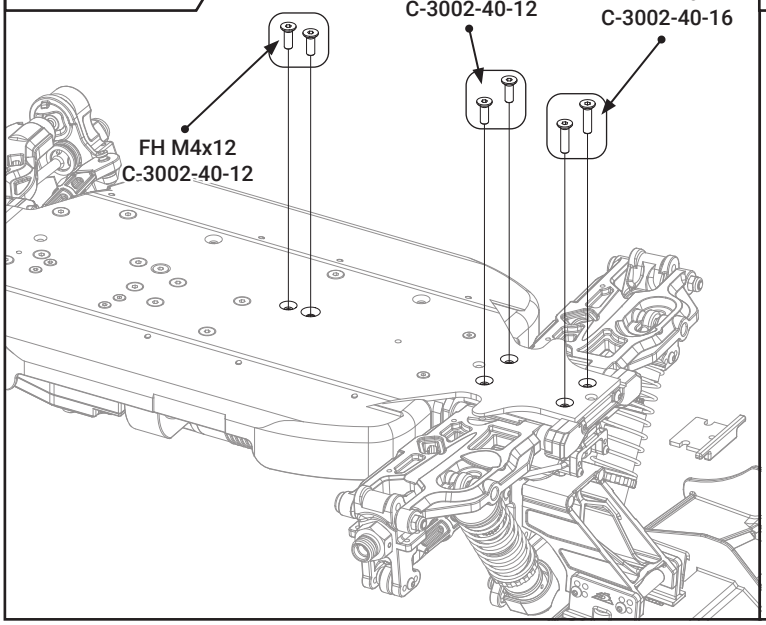

STEP 3
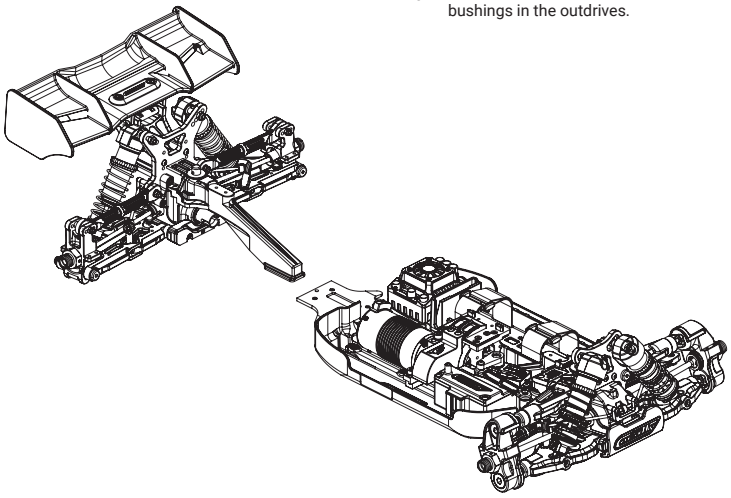
Don't forget to re-install the driveshafts and rubber bushings in the outdrives.